Important Announcement

WE have dropped the word "Safety" from our corporate name. Henceforth we shall be known as the Heine Boiler Company.

When we began business our boiler was heralded on account of its safety from explosion as compared with the then usual fire-tube type of boiler. The development of the art has brought many water-tube type boilers into the market, all following the safety principle of the original Heine, in one way or another; regulations are now so well enforced, that the word "Safety" no longer carries the distinction it originally had.

We make this explanation as we want it clearly understood that the change in name has no other significance. It involves no change in policy or personnel. It is merely the dropping of a now useless adjective, in the interests of brevity and simplicity.

February 1, 1922.

Heine Boiler Company
SAINT LOUIS U.S.A.

HELIOS

CORRECTIONS

Page 51, line 13 and 14 from bottom.
For "H. C. Meinholdt" read "H. C. Meinholtz"

Page 57, line 10 from bottom.
For "10 lb." read "2½ lb."

Page 83, line 6 from bottom.
Cross out sentence beginning "Its specific heat"

Page 118, caption.
For "Sixteen" read "Twenty"

Page 401, Fig 193 caption.
For "or" read "and"

Page 607, line 6 from bottom.
For "Fig. 263" read "Fig. 264"

Page 608, line 16 from top.
For "Fig. 258" read "Fig. 259"

STEAM BOILER ENGINEERING

A Treatise on Steam Boilers and the Design and Operation of Boiler Plants

Published by

HEINE SAFETY BOILER CO.

Manufacturers of

WATER TUBE BOILERS

SAINT LOUIS, MISSOURI

1920

TWENTY-SEVENTH EDITION

HEINE SAFETY BOILER COMPANY
SAINT LOUIS, MISSOURI

It has been decided to follow the usual practice of giving new numbers to all new editions and of repeating the edition numbers on reprints only. In conformity with this, the previous editions have been renumbered as follows:

Old Edition Numbers	Dates of Publication	New Edition Numbers	Old Edition Numbers	Dates of Publication	New Edition Numbers
1	1893	1	9	1902	11
1	1893	1	9	1902	11
2	1893	2	9	1902	12
2	1893	2	10	1904	13
3	1894	3	10	1905	14
3	1894	3	10	1906	15
4	1895	4	10	1908	16
5	1895	5	10	1909	17
5	1895	5	10	1910	18
6	1896	6	11	1912	19
6	1896	6	11	1912	20
6	1896	6	11	1914	21
7	1897	7	11	1916	22
7	1897	7	11	1917	23
7	1897	7	11	1918	24
8	1899	8	12	1919	25
8	1899	8	12	1919	26
8	1900	9	Present Edition	1920	27
8	1900	10			

HEINE SAFETY BOILER CO.

General Offices

ST. LOUIS, MO.

Plants

ST. LOUIS, MO. PHOENIXVILLE, PA.

Branch Offices

NEW YORK
11 Broadway

BOSTON
50 Congress Street

PHILADELPHIA
Pennsylvania Bldg.

PITTSBURGH
Park Bldg.

CHICAGO
First National Bank Bldg.

CINCINNATI
Union Trust Bldg.

NEW ORLEANS
Godchaux Bldg.

DETROIT
Dime Bank Bldg.

CLEVELAND
Schofield Bldg.

Representatives

DENVER
Stearns-Roger Mfg. Co.
1718 California Street

DALLAS
Smith & Whitney
Southwestern Life Bldg.

HAVANA, CUBA
Oscar B. Cintas

SAN FRANCISCO
Dorward Engineering Co.
Cunard Bldg.

CHARLOTTE, N. C.
Alexander & Garsed

YOKOHAMA, JAPAN
Takata & Co.

TORONTO
Henry Engineering Co.

Plant No. 1, St. Louis, Mo.

Plant No. 2, Phoenixville, Pa.

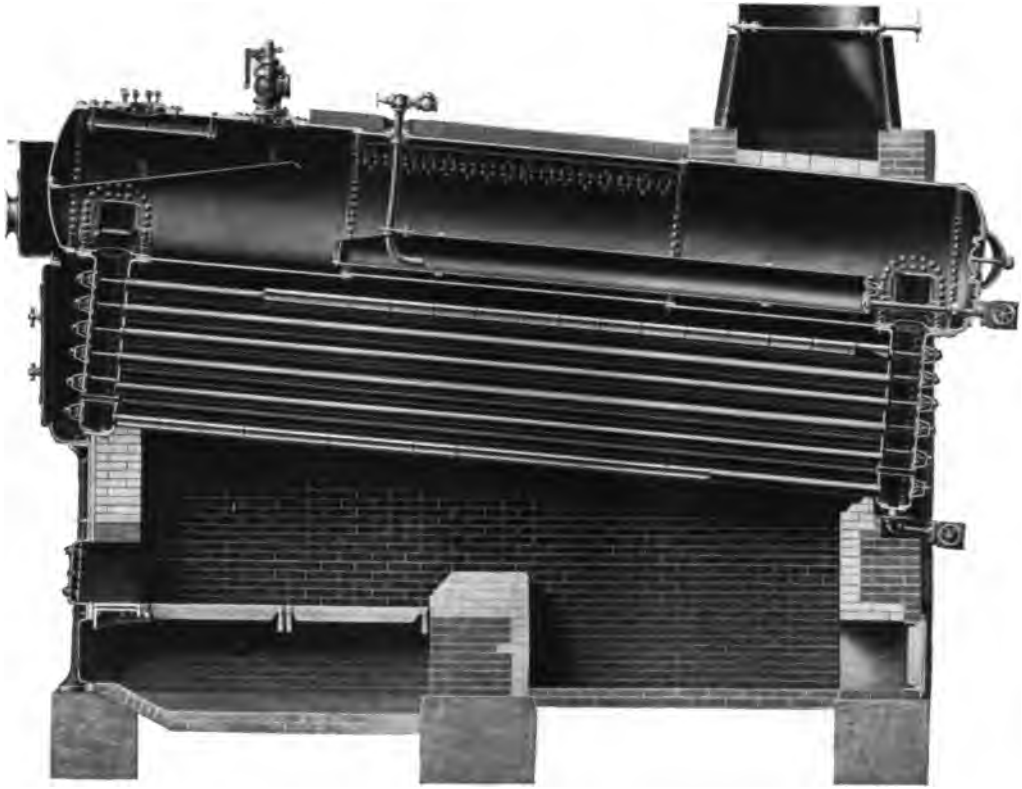

Heine Standard Single Pass Boiler, with Setting for Hand Firing.

Preface to Twenty-seventh Edition

THE present edition of Helios is entirely new. Since the book was first published, almost twenty-seven years ago, steam engineering practice has been completely revolutionized. Our knowledge of fuels, of their proper combustion, and of steam-power applications has been developed to a remarkable extent.

This new Helios is intended to summarize the latest commercial developments in boiler-plant practice. It was written, compiled and edited by the Research Department of the Heine Safety Boiler Co. for the large number of engineers and men with engineering interests who have to deal with problems of boiler plant design and installation.

The preface to the first edition of Helios, which appeared in July, 1893, was written by Col. E. D. Meier, founder and first president of the Heine Safety Boiler Co. This preface, which is reprinted on the next two pages, carries a message that is as true today as when it was written by Colonel Meier.

Helios—a Text Book on Steam Boiler Engineering—is respectfully dedicated to all those interested in increasing the efficiency, economy and capacity of steam power-plants.

HEINE SAFETY BOILER CO.

St. Louis, December 11, 1920.

HELIOS

Source of All Power! Fountain of Light and Warmth!

Adored by the ancient husbandman as the God who blessed his labors with a harvest of golden grain; revered by the early sage as the great visible means of the divine creative force; pictured by the inspired artist as the tireless charioteer who drives his four fiery steeds daily across the heavens, his head circled by a crowd of rays, his chariot wheel the disk of the sun itself.

When primeval man began to think, the sun seemed to him the cause of all those wonders in nature which ministered to his simple wants, or taught his soul to hope. His crude feelings of awe and gratitude blossomed into worship, and we find the sun as central figure in all early religions. He was the Suraya of the Hindoos. the Baal of the Phoenicians, the Odin of the Norsemen, and his temples arose alike in ancient Mexico and Peru. As Mithras of the Parsees, he was adored as the symbol of the Supreme Deity, his messenger and agent for all good. As Osiris he received the worship and offerings of the Egyptians, whose priests, early adepts in the rudiments of science, saw in him the cause of the annual fructifying overflow of the Nile.

Modern knowledge, with its vast array of facts and figures, can but verify and seal the faith of these ancient observers. What they dimly discerned as probable is now the central fact of physical science. From him are derived all the forces of nature which have been yoked into the service of man. All animal and plant life draws its daily sustenance from the warmth and light of the sun, and it is but his transmuted energy we expend, when, with muscle of man or horse, we load our truck or roll it along the highway.

Do we irrigate the soil from the pumps of a myriad of windmills? His rays, on plains far inland, supply the energy for the breeze which turns their vanes. Does a lumbering wheel drive a dozen stamps and a primitive arastra in some Mexican canyon? Do mighty turbines whirl a million flying spindles and shake thousands of clattering looms on the banks of some New England stream? From the bosom of the ocean and the swamps of the tropics, Helios lifted those vapory Titans whose lifeblood courses in the mountain torrent and the river of the plain. Do a hundred cars rattle up the steep streets of the smiling city by the Golden Gate? Are massive ingots of steel forged to shape and size by the giant hammers of Bethlehem? The fuel which gives them motion was stored for us, ages before man was evolved, by the rays which flash from his chariot wheels! "The heat now radiating from our fire places has at some time previously been transmitted to the earth from the sun. If it be wood that we are burning, then we are using the sunbeams that have shone on the earth within a few decades. If it be coal, then we are transforming to heat the solar energy which arrived at the earth millions of years ago."

Professor Langley remarks that "the great coal fields of Pennsylvania contain enough of the precious mineral to supply the wants of the United States for a thousand years. If all that tremendous accumulation of fuel were to be extracted and burned in one vast conflagration, the total quantity

of heat that would be produced would. no doubt, be stupendous, and yet," says this authority, who has taught us so much about the sun, "all the heat developed by that terrific coal fire would not be equal to that which the sun pours forth in the thousandth part of each single second."

The almost limitless stores of petroleum which are found in America and in Asia, and the smaller, though still vast supplies of natural gas which some favored localities are now exploiting, represent but so much sun-energy transmuted through forests of prehistoric vegetation.

Another authority tells us that the total amount of living force "which the sun pours out yearly upon every acre of the earth's surface, chiefly in the form of heat, is 800,000 horse-power." And he estimates that a flourishing crop utilizes only four-tenths of one per cent of this power.

Remembering, then, that this sun-energy reaches us only one-half of each day, we may, *whenever we learn how*, pick up on every acre an average of 175 horse-power during each hour of daylight, as a surplus which nature does not require for her work of food production.

Attempts to utilize this daily waste have been made, and future inventors may fire their boilers directly with the radiant heat of the sun. But whether we depend on what he garnered for us ages ago, or quite recently, or on the stores he will lavish on us in the future, it is clear that man's continued existence on earth is directly dependent on HELIOS.

In olden times the various trades or guilds chose as their patron saint some prominent person who was thought to have embodied in his life-work the special means and methods of their craft. By that token we claim Helios as our own. He has always carried the record for evaporative efficiency. He provides both the fuel and the water for our boilers. He teaches us perfect circulation, upward as mingled vapor and water by the action of heat, and down again by gravity as rain and river in solid water. It is therefore fit that the boiler in which this perfect and unobstructed circulation is made the leading feature of construction should have HELIOS as its emblem.

In the following pages we have some account of the fuels used in the practical arts, of the water which becomes the vehicle for transmitting their energy into mechanical power, and of the limitations imposed by their varying conditions. These must all be taken into account in estimating how much we may expect of certain combinations of machinery.

We trust that the tables and data may be found convenient for ready reference alike by professional men, by manufacturers, and by that growing class of practical steam engineers who realize that true theory, consonant with collective experience, is within the reach of every thoughtful man who pulls the throttle.

E. D. MEIER.

This explanation of the choice of the word HELIOS, as the name of this book, appeared as the preface of the first edition in July, 1893, and the word has ever since been a prominent feature of our trade mark.

CONTENTS

CONTENTS

Heine Standard Two Pass Boiler with Setting for Hand Firing.

CHAPTER 1

HEINE PRACTICE

THE first Heine Boiler was designed by *Colonel E. D. Meier* and built in St. Louis in 1882. It is still in first-class working order, and is open to public inspection at the St. Louis Plant of the Heine Safety Boiler Company.

Colonel Meier founded the Heine Safety Boiler Company in 1884 and was president of the company until his death in 1914. Heine Boilers have been built without interruption since the company was founded; the fact that many of those sold in the 'eighties are still in operation, testifies to the superiority that has always characterized them.

This long period of operation, in conjunction with up-to-date factory methods and equipment, has enabled the Heine Company to build up an organization of experts in boiler design, manufacture, and operation.

There are two plants—St. Louis, Mo., and Phoenixville, Pa. Each plant has complete manufacturing facilities, and consequently is an entirely independent source of supply. The general offices of the company are at St. Louis.

Heine Boilers are of two general classes, longitudinal and cross drum. While the longitudinal drum type is the standard for land service, many Heine users prefer the cross drum on account of the low head room required. They are built in both types for marine service, though the cross drum is general practice for this work and the recognized standard.

All Heine Boilers for land service are built to conform to the requirements of the Boiler Code formulated by the American Society of Mechanical Engineers, notwithstanding that weaker (and cheaper) construction is permitted in many states. In this code are incorporated the most rigid requirements for boiler construction and materials.

Heine Boilers for marine service are built in accordance with the rules and regulations of the United States Board of Supervising Inspectors. They are approved by Lloyds' Register of Shipping and by the American Bureau of Shipping.

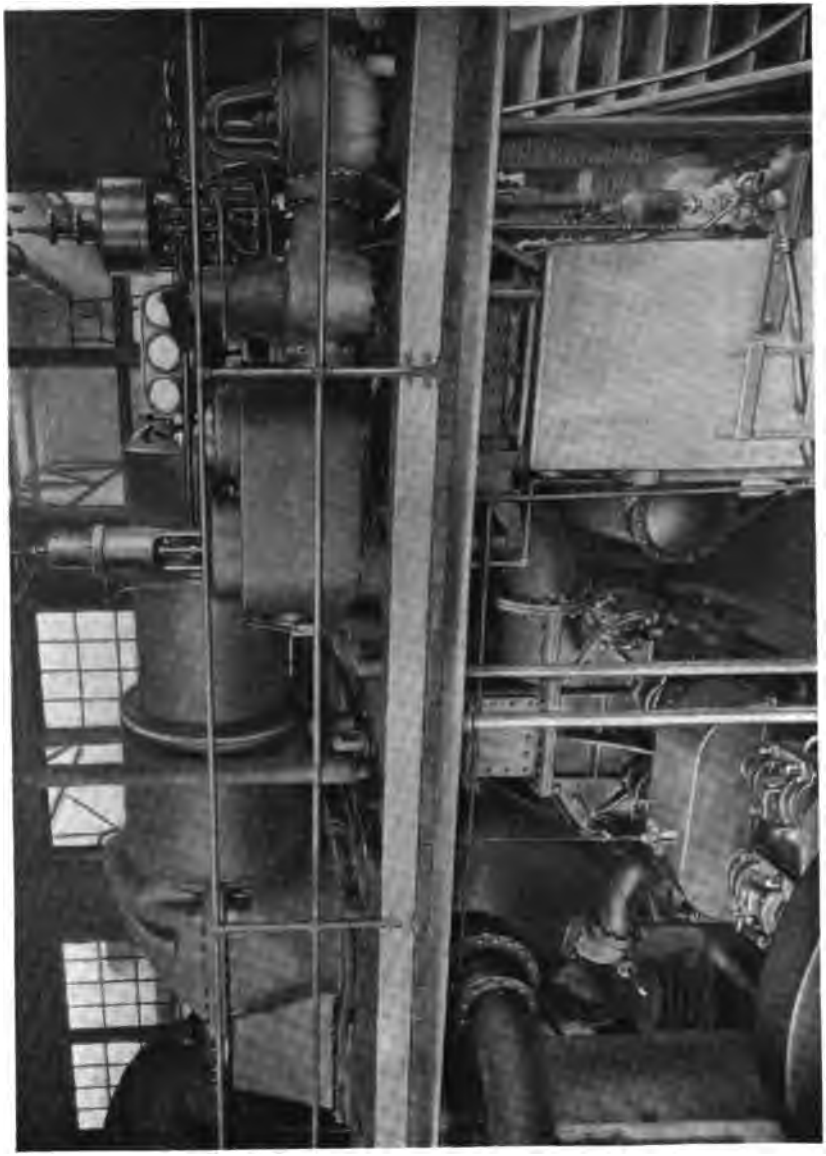

1000 K. V. A. Steam Turbine, Plant No. 1.

Heine Manufacturing Facilities

THE two large plants owned and operated by the Heine Safety Boiler Company are shown on pages 6 and 7. Both are fully equipped with electric, hydraulic and pneumatic machinery, as well as with powerful cranes and hoists for handling the heavy weights involved in the manufacture of boilers.

Steam is generated at each plant by a battery of Heine Boilers. At each plant the power equipment—steam turbines, generators, condenser and cooling tower, engines, hydraulic pumps and accumulators, air-compressors—is installed almost entirely in duplicate, every precaution being taken to avoid a shutdown. Parts of the turbine-room and of the engine and pump rooms of the St. Louis plant are shown on pages 16 and 18. The power plant at Phoenixville is similar to that at St. Louis.

The boiler-making tools found in the Heine plants include rolling and bending machines, flanging and forging presses, hydraulic riveters, punches, shears, steam hammers and forges, heating and annealing furnaces, for various purposes. Lathes, drill presses, boring mills, and other machine tools are used. Special machines and equipment, designed and built by the Heine Company, are employed for various purposes such as for accurately reaming rivet and tube holes. The larger electrically driven machines have individual motors, while the smaller machine-tools are belted to motor-driven line-shafts.

Page 20 shows a heavy flanging press and one of the large steam hammers in the St. Louis plant. Portable hydraulic riveters are used for some operations, such as riveting waterlegs to the drums, shown on page 24. Hydraulic "bull" riveters, page 26, are installed in towers equipped with high overhead cranes for handling boiler drums and other long parts. Page 22 shows part of the machine shop at Phoenixville. Page 30 shows the testing floor at St. Louis. In the sheet iron department, parts not subjected to pressure are fabricated, such as internal mud drums, deflection plates, boiler fronts and breechings.

Ten Characteristics of Heine Boilers

CERTAIN features of design and construction insure continuous, satisfactory service from all types of Heine Boilers. They can be summarized as follows:

1. *Workmanship.* Heine Boilers are built by expert workmen, in modern shops equipped particularly for the production of high-class water-tube boilers. The materials and the construction of every Heine Boiler conforms with the rules and regulations issued by the highest authorities. This means that Heine Boilers comply with the best standards as regards safety, economy and durability.

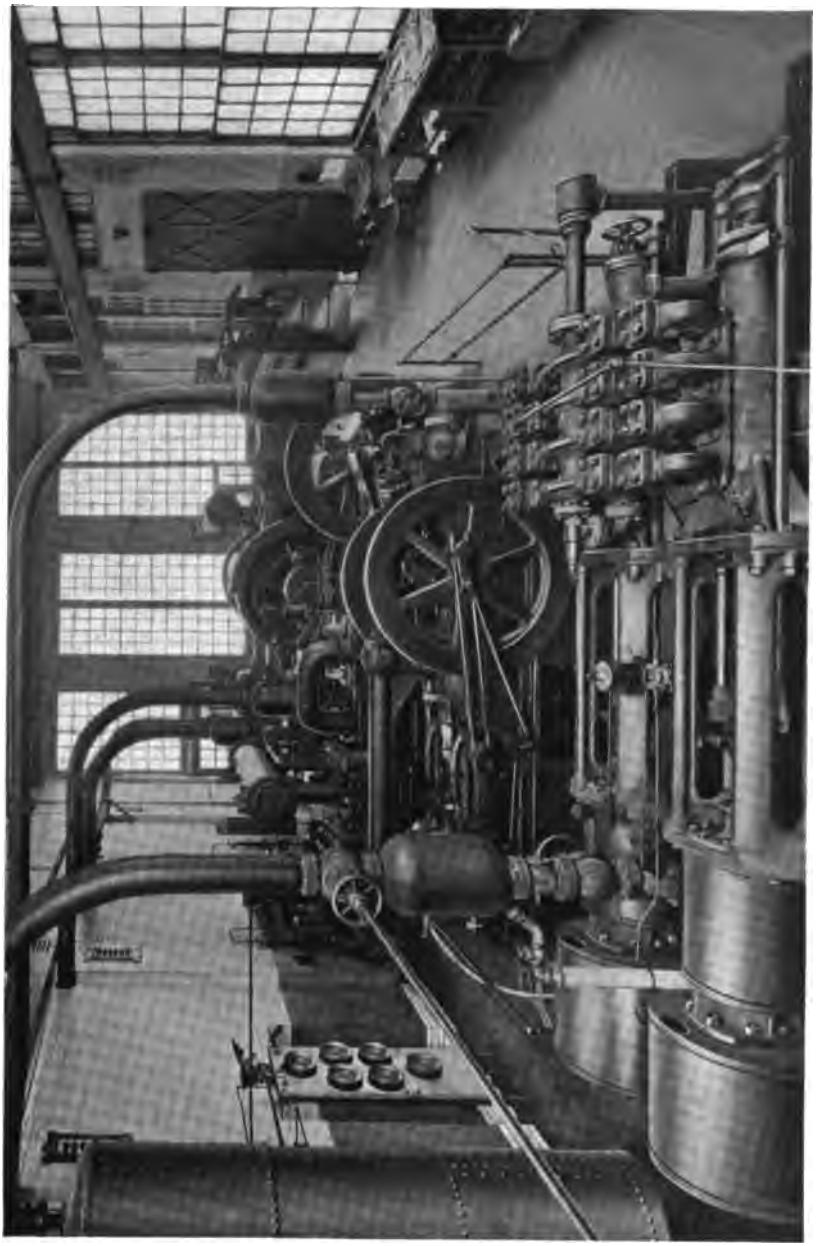

Engine Room, Plant No. 1.

2. *Strength.* The construction of the waterlegs or headers, flanged plates with ample staybolts, is approved and widely accepted practice. It has given the greatest satisfaction under such severe service as in the locomotive boiler and the Scotch marine boiler, and is highly commended by the foremost boiler authorities of all countries. It avoids welding, and permits better general design and accessibility, closer tube spacing, easier, freer circulation and less punishment of material during construction than do any of its substitutes. The unusual strength of structure obtained by the direct connection of the drum and headers, virtually makes the Heine a "one-piece" boiler, well qualified for prolonged hard service. The first Heine boiler built was used continuously for 35 years, after which period an inspection by The Fidelity and Casualty Company showed that it was still in proper working condition.

3. *Overload Capacity.* Heine Boilers are adapted for operation at high overloads, because of the unusual provision for rapid circulation, the large combustion space and the method of baffling.

4. *Water Purification.* In the Heine Boilers a large proportion of the scale-forming impurities in the feed-water are deposited in the internal mud drum, and are thus prevented from accumulating on the heating surfaces. The ordinary mud drum is simply a receptacle for the collection by gravity (even this is hindered by the water circulation) of impurities precipitated within the boiler. With the Heine internal mud drum the new feed-water must be at least partly purified before it enters the water circulating in the boiler. The solids deposited are not hardened by heat, but remain in the form of a sludge, which can be easily blown off.

5. *Free Circulation and Dry Steam.* These are attained in the standard Heine Boiler by the use of spacious headers at each end of the tube nest, which are connected to the drum by large throat passages. The generated steam has ample room to escape without pulling water along. In the cross drum boiler, free steaming ability is promoted by a device in the upper part of the rear box header, which effects a primary separation of the steam and water. The return water circulation is along the upper tubes of the main bank The steam passes along the horizontal tubes and the final separation takes place in the cross drum.

6. *Tube Design.* Straight tubes, as used in the Heine Boiler, are the easiest to clean, install, examine, and renew; they give maximum efficiency and the best circulation.

7. *Heating Surface.* The gases flow parallel with the tubes in the Heine Boiler. After entering the nest of tubes, they do not leave it until they are discharged to the breeching. This method of gas passage has been proved to give the highest rate of heat transmission with the least draft loss.

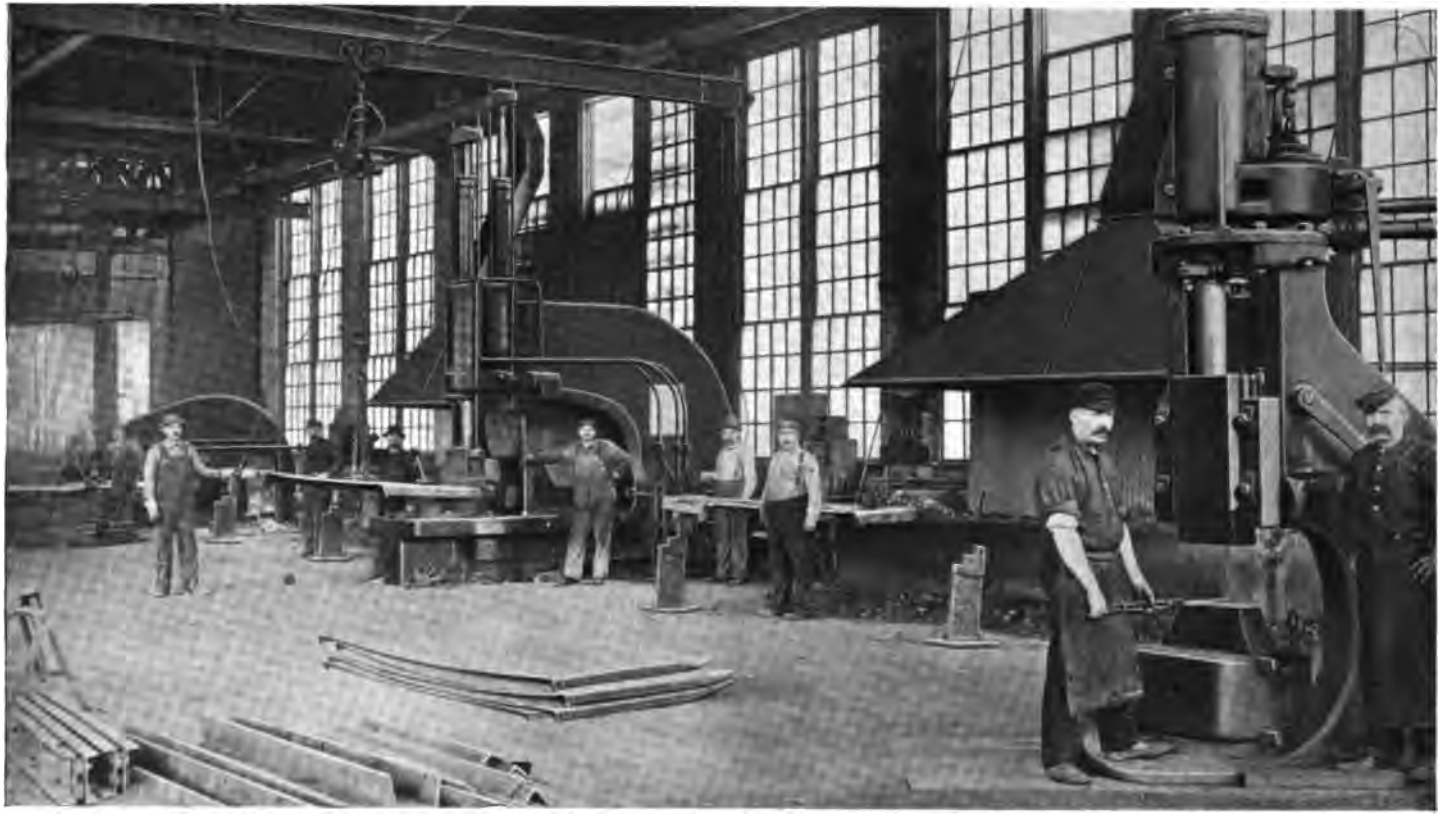

Flange Shop, Plant No. 1.

8. *Combustion Chamber.* This is of ample size so that the gases are thoroughly mixed and burned before they strike the cool heating surface. The lower baffling forms the roof of a reverberatory chamber, providing ideal conditions for perfect combustion.

9. *Floor Space.* The compact arrangement of heating surface due to the close tube spacing, lessens the floor space and head room required. Any number of Heine Boilers can be set in a single battery; alleyways are unnecessary, so that the saving of space is large. Boilers set in a solid battery are immune from most of the losses by air infiltration and radiation.

10. *Cleaning Facilities* The outsides of the tubes are cleaned quickly and thoroughly by a soot blowing system operated from the front and back, and provided with every boiler. Side-wall dusting doors are unnecessary, and their absence greatly reduces the air inleakage, insuring a high percentage of CO_2 with consequent fuel economy. Since straight tubes only are used, the inside surfaces are easily inspected and cleaned through the handholes in the waterlegs. In the cross drum boiler, the tubes and nipples connecting the drum with the box headers are quickly cleaned through the manholes provided.

Section of Drum and Waterleg of Heine Standard Boiler. Note the Large Throat Area.

Machine Shop, Plant No. 2.

Heine Service

THE Heine Safety Boiler Company maintains an Engineering Department for the assistance of its clients in the arrangement and improvement of new and existing boiler plants. Experience in the installation of boilers in plants of widely diversified size and type, qualifies us to recommend the best method of procedure to meet the conditions prevalent in any particular plant. This service covers not only boiler and furnace design for the various types of fuel and operating conditions, but includes recommendations as to building design, coal and ash handling equipment, piping, stacks, breechings, etc.

The Research Department, besides being engaged upon new developments in boiler engineering, is constantly rendering assistance in such problems as the efficient handling and combustion of all kinds of staple and refuse fuels, special furnace and boiler settings, baffling to meet unusual conditions, recovery of heat from waste gases, chimneys, draft, etc.

The Library contains a copy of almost every domestic and foreign work on power plant engineering, besides a large collection of references on every conceivable phase of boiler practice. This information is at the disposal of our clients.

The continuous satisfactory performance of every Heine boiler is our vital concern as well as that of the customer. Our interest in the boiler does not cease when it has left our shop. A Trouble Department is maintained, composed of technically and practically trained engineers whose principal duties are to assist our clients in overcoming any difficulties which may occur in boiler operation. This service includes such investigations as the study of firing methods, scale formation or priming due to poor water conditions, boiler inspection, boiler testing, etc., etc.

There are sixteen branch offices and three distributing warehouses for repair parts. The production of parts in large quantities by modern manufacturing methods, the storage of patterns, etc., results in the supply of renewals at small cost; and an efficient system of records of every Heine boiler since the first, insures prompt shipment.

Standard Longitudinal Drum Boilers

THE standard Heine Boiler, shown on pages 8 and 14, consists of a cylindrical shell or drum to which box-shaped headers (waterlegs) are riveted at each end. These waterlegs are connected by the main nest of tubes.

Riveting Waterlegs to Shells with Portable Hydraulic Riveter.

The drum consists of three sheets, riveted in accordance with the approved rules. It varies in diameter from 30 to 48 in. and in length from about 17 to 22 ft., according to the horsepower required. The longitudinal seams are of the double-strap butt-joint type, while girth or circumferential seams are of the lap-joint type, single or double riveted. The design of the riveting depends upon the pressure to be carried.

The heads are dished to a radius equal to the diameter of the shell, and thus require no internal staying. A flanged manhole, provided with a pressed steel cover, forms part of the rear head. The main steam outlet and the safety valve are attached to pressed steel saddles, riveted to the top of the drum near its front end.

The material for both waterlegs and drums is the best firebox steel plate, made especially to Heine specifications and tested before shipment.

Hollow Staybolts of Heavy Gauge Steel Tubing.

The waterlegs are connected to the bottom of the drum near each end by a throat opening, page 21, braced by forged steel throat stays, page 46, which are riveted across when the waterlegs are attached. The waterlegs consist of two plates—the tube sheet and the handhole sheet. These plates are machine-flanged and are joined by a narrow plate similar to a butt-strap. The waterlegs are stayed by hollow staybolts made of carefully tested mild steel tubing; these are screwed into tapped holes in the two plates, and the projecting ends upset from the outside. The tube holes and handholes are located accurately and bored to exact diameters. The waterlegs are built complete and then hydraulically riveted over the throat openings.

The handholes are round, except a few at the top and bottom, which are oval and are used for the introduction of the round plates into the waterlegs. The handholes are closed in three different ways; by strong cast iron plates; by drop-forged steel plates; or by the Key pressed steel handhole caps. All of these are inserted from the inside so that the steam pressure tends to tighten them, and does not loosen them as in the case of plates applied from

Bull Tower equipped with Large Hydraulic Riveters for Riveting Shells, Stacks, etc., Plant No. 1.

the outside. The plates are held in position by bolts and yokes, the latter bearing against the outside of the handhole sheet. Gaskets are required with the plates, but not with the Key caps which are rolled in slightly tapered holes so that the pressure within the boiler tends to hold them more tightly.

Lap-welded steel tubes are supplied with the Heine Boiler, but charcoal iron or seamless steel tubes can be supplied as optional equipment. The tubes extend between the two waterlegs, and are

Handhole Closures. (a) Cast Iron; (b) Drop Forged Steel; (c) Key Pressed Steel Handhole Caps.

expanded into the tube sheet by roller expanders. The tube ends are slightly flared to increase the holding power.

The baffling on Heine boilers is varied somewhat according to the conditions of operation. Page 8 shows the single-pass, and page 12 the two-pass system. The simplest arrangement is to place the baffle tile on the lowest row of tubes, and a second baffle on the second row of tubes from the top, giving a single pass of the gases through the tube nest. The lower baffle may be placed on the third row of tubes from the bottom, thus giving a partial pass through the three lower rows, and a complete pass through the remainder of the nest of tubes. In still another arrangement one baffle is placed on either the first or third row of tubes from the

Erecting and Testing Floor, Plant No. 2.

bottom, and another baffle introduced a little more than half-way up the height of the tube nest, thus giving the products of combustion two full passes through the nest of tubes.

The baffle tiles are designed to rest on or between the tube rows. The bottom row is formed of specially shaped fire-clay tile, while the upper and middle rows are either fire-clay or cast iron shapes, according to conditions.

Heine Superheaters

THE standard Heine Superheater, page 34, is placed at the side of the drum toward the front. It may be single—on one side, or in two parts—one on each side of the boiler. One or two units are used, according to the capacity and degree of superheat required.

The superheater consists of a header box divided horizontally into three compartments, and with U-tubes inserted into one side and bridging the partitions. Steam from the boiler enters the lower compartment, passes through the lower nest of tubes into the middle compartment, then through the upper nest of tubes into the upper compartment, from which it issues. These passages effect a thorough mixture of the steam and ensure a uniform temperature.

A small flue built in the side-wall carries part of the hot gases direct from the furnace into the rear of the superheater chamber. After making a first upward pass over the outermost ends of the tubes, the gases make a second downward pass over the rest of the tube surface; and after leaving the superheater chamber pass along the boiler drum, thus giving up the remainder of their available heat.

The header box is built with one seam and one row of rivets, the caulking edge being to the front. The two sheets of the box are braced by hollow staybolts. Access to the interior is gained by handholes closed by inside plates, which are placed opposite the tubes. The U tubes are 1½-in. diameter, of seamless steel.

The superheater chamber is of brickwork, with a firebrick roof carried by T-bars. The front of the superheater is closed in by doors, which prevent radiation and give access to the header box.

A damper in the outlet of the superheater chamber controls the flow of gases; there is no danger of its becoming overheated, since the gases do not come in contact with it until they have been cooled by passing through the superheater. The damper is regulated by hand from the front of the boiler, or an automatic thermostatic control regulates the superheat to within 5 deg. above and below the temperature desired. A full and illustrated explanation of the temperature control, as well as a discussion of the dangers resulting from uncontrolled and excessive superheats, is given in "Superheater Logic," which also contains a complete description of the construction of the superheater. This Heine publication is mailed on request.

Erecting and Testing Floor, Plant No. 1.

No scale is deposited in the tubes because flooding of Heine superheaters is unnecessary. Closing the damper isolates the tubes from the hot gases, and then only saturated steam is delivered.

The superheater is built complete and tested before shipment, so that it is ready for erection upon arrival.

The arrangement is such that it can be cleaned easily and thoroughly while in operation, insuring efficiency, close temperature regulation, and economy. The tubes are smooth and therefore accumulate very little soot; this is easily removed by a steam lance passed through the hollow staybolts, or by a permanent soot blower similar to that on the boiler.

Adaptability of Heine Boilers

HEINE Boilers suit the conditions and plans of any power plant. There are no doors in the sidewalls and no aisles are required between boilers, because all cleaning, inspection and tube renewals are done from the front and back. Consequently, any number of boilers may be set in single battery and this materially reduces the cost of brickwork. With center-retort and side-feed stokers, hand firing, oil or gas firing, the space required is greatly reduced as is seen by comparing with layouts of other standard boilers; and this lowers the cost of the boiler house. Such plants are generally simplified as there are no aisles to bridge, and this also applies to piping arrangements. Operating efficiency is noticeably increased owing to the shorter flues, elimination of sidewall radiation and infiltration of air, and avoidance of air-leakage through sidewall cleaning and dusting doors and the numerous cracks inevitably starting from them.

Heine boilers are running satisfactorily with stokers and mechanical furnaces of every standard type. All kinds of fuel are being successfully burned under them—fuel oil, gas, pulverized coal, tan bark, bagasse and sawdust. They are giving excellent service under the most varied conditions of power production, manufacture and process, where steam is required either steadily or in heavy and irregular drafts.

The unusual adaptability of Heine Boilers for the utilization of waste heat from kilns, stills, metallurgical furnaces and other processes is discussed in Chapter 4.

Installation of Heine Boilers

HEINE Boilers of 500 H.P. or less are shipped completely assembled, page 36, while the larger sizes are knocked down for shipment, page 38. For export, they are shipped in separate parcels, containing the tubes, the central part of the drum, and the waterlegs with short section of drum attached. The cross drum boilers can be shipped entirely knocked down, page 40, the headers and drum

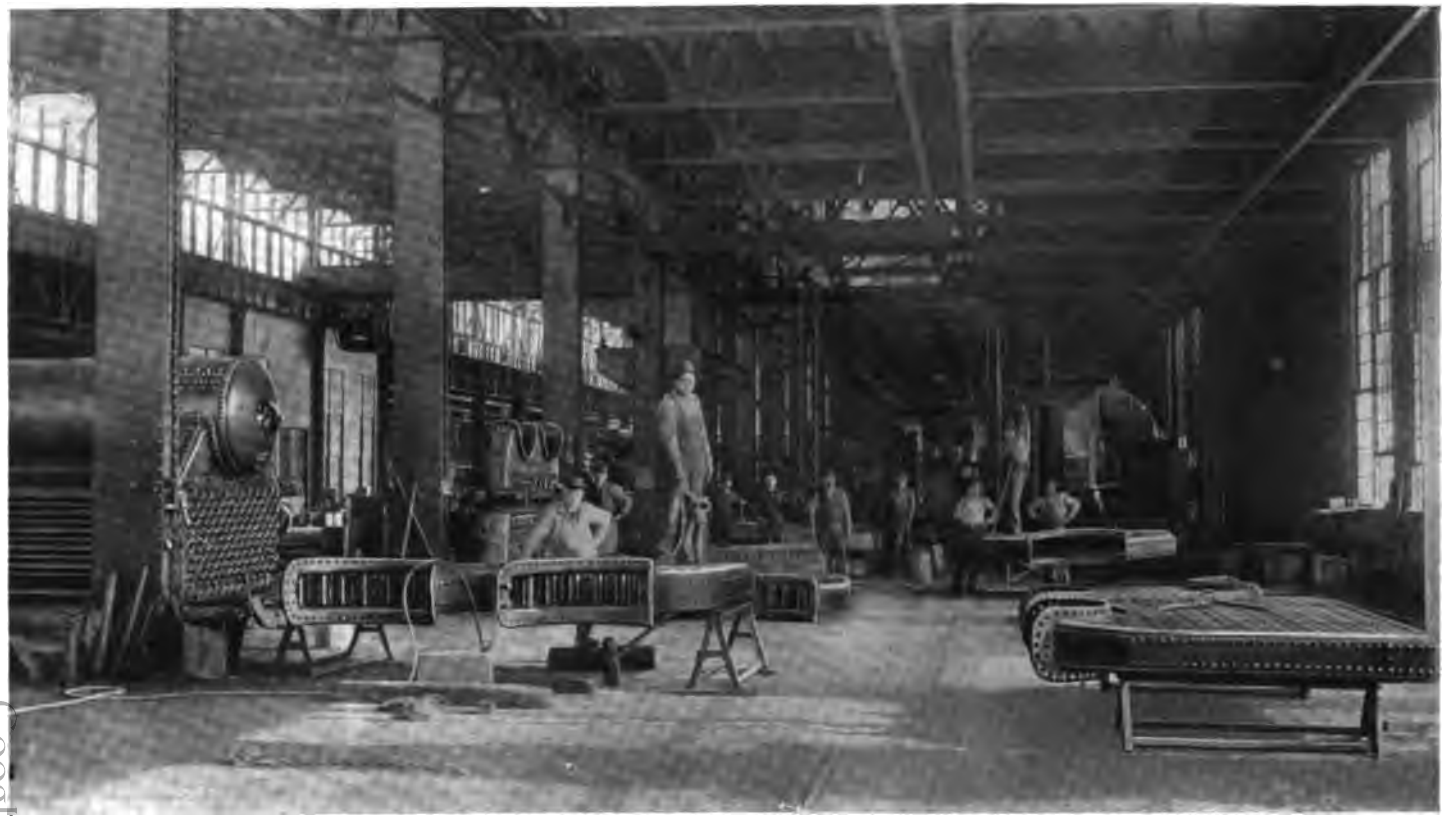

Riveting-over Staybolts in Waterlegs, Plant No. 1.

being complete in all respects so that assembling consists only of expanding the tubes.

When set up ready for service, the Heine Boiler inclines upward from rear to front at a slope of one in twelve. The front end of the boiler is carried by heavy cast iron columns. For hand-firing, the waterleg rests directly on the columns; while for stoker firing, brackets riveted to the waterlegs are supported on the columns, or the front of the boiler is carried on an overhead support. The rear end rests on rollers bearing on iron plates which are set in the top of the low brick wall forming part of the setting. These rollers permit expansion and contraction and avoid injurious strains.

On each side of the boiler is a solid brick wall lined with firebrick and carried to the height of the ornamental front. Returns are made at both front and rear, following the curvature of the drum and waterlegs, the weight of the brickwork being carried by metal supports. The space between these supports and the boiler is filled with asbestos fiber, which prevents the ingress of air. The space prevents any displacement of brickwork due to expansion and contraction of the boiler, since the walls are supported independently and slightly away from the boiler. The brickwork is tied together by longitudinal and transverse anchor bolts secured at each end of the setting and at several places on the sides to substantial rolled steel buckstays. The top of the setting is closed on each side of the drum by cast iron plates, which rest on the sidewalls and on a tile-bar carried by brackets attached to the drum. Openings are left at the rear for the exit of the gases. A brick arch is built over the drum to prevent radiation, and is of firebrick in the uptake.

Over the uptake openings, and supported by the boiler walls, is placed a breeching hood of suitable shape to connect with the breeching.

The cast iron fire fronts carrying the fire and ash door frames are bolted to the supporting columns, and a substantial firebrick wall is built inside to prevent overheating. The fire fronts support the upper ornamental front, page 42. Large doors are provided at both front and back for access to the waterlegs.

Stationary grates are ordinarily furnished, but shaking grates or any other form of furnace or stoker can be substituted. Stokers are frequently set directly under Heine Boilers owing to the large combustion space, and no more floor space is then occupied than with hand-firing; but it is often advantageous to use an extension furnace or Dutch oven. The Dutch oven is generally the best arrangement for burning sawdust, shavings, tan bark, bagasse and similar fuels, owing to the large furnace chamber desirable and the convenience of the top-feed. Methods of applying stokers and furnaces are shown in Chapters 4 and 5.

Heine Standard Superheater.

Operation of Heine Boilers

THE water circulation and steam separation in the Heine Boiler are absolutely definite. The capacious headers and large throat openings allow a freedom of flow unattainable with sectional headers. The throat openings are from two to four times the area of the tubes which connect sectional headers to their drums. The resistance at the entrance of these tubes and of the zig-zag path along sectional headers is a further obstruction to circulation. Heine box-headers are common to all the tubes, and water enters the tubes round their whole circumference, whereas side-entry is cut off in sectional headers. The slope of the Heine drum provides deep water at the rear for the effective suppiy of the back header.

The water rises through the large throat into the Heine drum at a sufficiently low velocity to allow of efficient separation of the steam by the deflector plate; while the steam and water is shot with considerable violence from the single tubes of sectional headers, making the drying of steam uncertain.

The water surface in the drum is more than ample, for steam is not disengaged from it as in tank and fire-tube boilers. What little circulation there is in fire-tube boilers, is entirely haphazard, and the water surface must be large because the steam is disengaged at any point. In the Heine Boiler the circulation is vigorous and orderly, and the steam is separated from the water by a properly arranged deflector at a definitely established point over the front throat passages, page 46. The deflector plate throws down the water and allows the steam to pass quietly into the steam space above; it then enters the dry pipe connected to the steam outlet.

A salient feature of the Heine Boiler is the internal mud drum, in which the feed-water is partly purified and heated to the boiling point before it enters the water in circulation. The feed-water pipe enters through the top of the drum and passes down to the front end of the mud drum. The mud drum is entirely submerged; and as the entering water is colder and therefore heavier than the water already inside, it travels along the bottom and becomes heated gradually. The mud drum is large enough to permit of such slow motion of the water that the dissolved impurities thrown down at steam temperatures have time to be deposited, together with matter carried in suspension. As the water becomes heated, it rises and finally flows in a thin sheet, through the opening in the top of the front end of the drum, into the circulation system. It is therefore possible to drive the Heine Boiler at heavy loads with very cold feed-water. As the matter deposited is not subjected to fire temperatures, it does not tend to become baked and hard, but remains as a sludge easily blown out through the pipe at the rear of the drum.

Method of Shipping Boilers Ready for Erection at Destination.

Because of the internal mud drum, the Heine Boiler works much more satisfactorily than any other boiler when only cold and dirty water are available. But it is always more economical to treat impure water before feeding it into the boiler, and to pre-heat it with waste steam or waste hot gases.

The boiler is drained through a valve at the bottom of the rear waterleg. The steam connection of the water column is made at the top of the front head, and the water connection at the top of the waterleg. The pressure gage is attached to the middle of the ornamental front and piped from the water column connection.

The gases of combustion—whatever type of furnace or stoker is used—pass over the bridge wall into a large combustion chamber. The bridge wall is low enough to provide ample area between its top and the tubes. The large combined capacity of the furnace and combustion chambers is one of the outstanding merits of the Heine Boiler. Plenty of time and space is provided for the thorough mixture and complete combustion of the gases before they come in contact with the comparatively cool heating surfaces. This provision for complete combustion, and the consequently improved efficiency and reduction of smoke has been proved so valuable that the Heine method has replaced the vertical baffling of many horizontal water-tube boilers and has even replaced the method of baffling of some types of vertical water-tube boilers.

In Heine Boilers, the gases travel parallel to the tubes, except when entering and leaving the tube bank. This parallel flow is used whether the gases make one or more passes. With parallel flow, the gases completely encircle the tubes. When the gases flow across the tubes, as in cross- or vertically-baffled boilers, a dead pocket occurs on the "down-stream" side of each tube. This effect can be seen by watching the almost stagnant water at the down-stream side of the piers of any bridge crossing a swiftly flowing river. Owing to the close tube spacing possible by the rational design of Heine header, the gases are broken up into smaller streams than is usual, so that the whole volume of gas is brought into intimate contact with the tube surface. That more efficient heat transmission is attained with parallel flow than with cross flow, has been frequently demonstrated in tests of cross-flow boilers that have been changed to parallel-flow.

It is important that the gases should be kept in contact with the heating surface until all the available heat is absorbed. In all cross- or vertically-baffled boilers, however, the gases are twice taken entirely away from the tubes, where they waste heat by radiation. In addition to the evident waste of heat, the hot gases from the first pass flow along the bottom of the drum causing ebullition in the wrong place, the avoidance of which should be one of the main advantages of the water-tube boiler. Another advantage of the

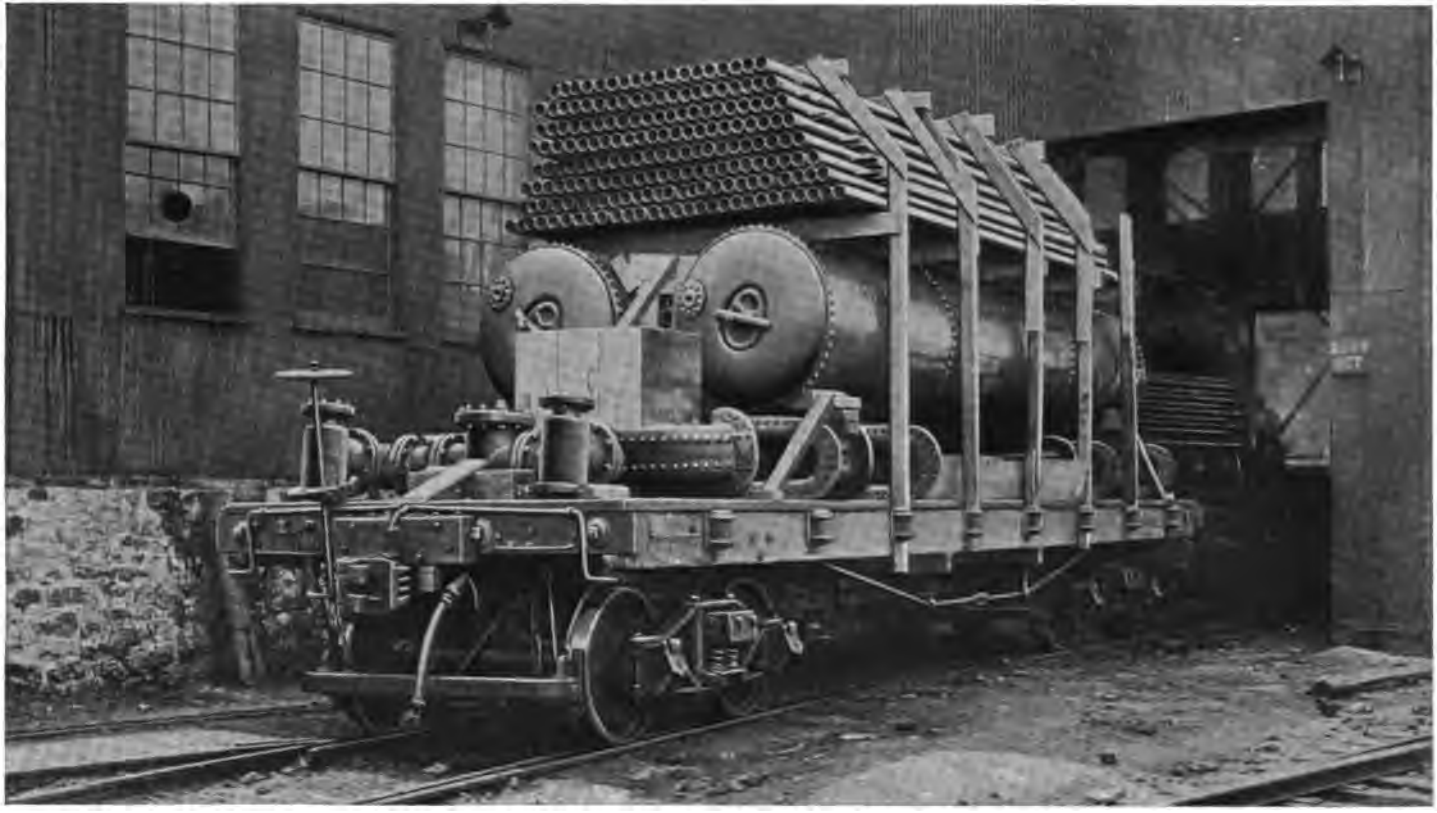

Method of Shipping Large Boilers Knocked Down to be Assembled and Erected at Destination.

water tube boiler—that of keeping hot gases away from the drum and from riveted joints—is absent in cross baffled boilers. In the Heine Boiler, the gases are confined to the tube bank until they have parted with nearly all of their available heat. Not until then do they come in contact with the drum; consequently the last of their useful heat is given up without disturbing the quiet flow of solid water to the rear.

The construction of the Heine Boiler combines sturdiness and resiliency. Water is boiled and steam generated in the bank of tubes and not in the drum or shell. The gases are kept where they belong —among the tubes—until discarded to the uptake. The circulation path is large and unrestricted, making the flow of water and steam slow enough for efficient separation—or for dry steam and a solid water stream.

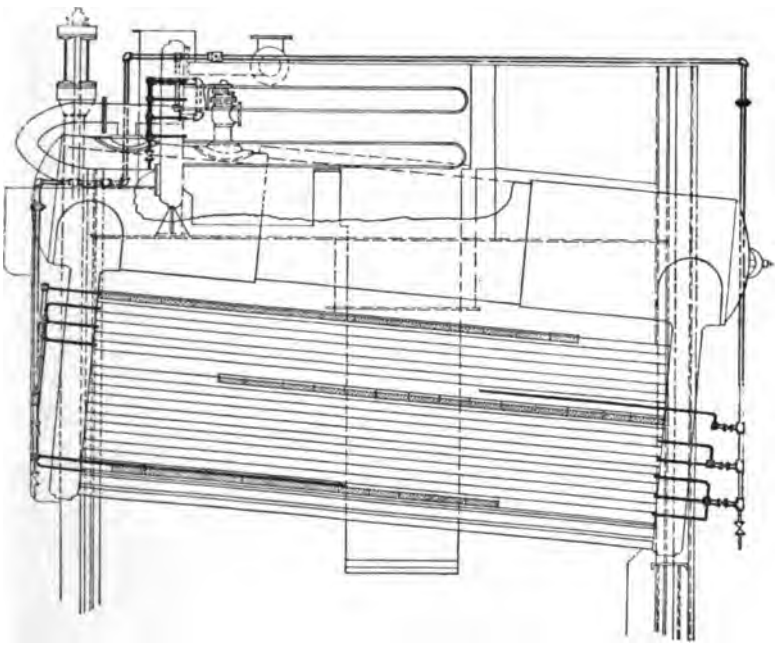

Soot Blowing System, Side Elevation.

Heine Cross Drum Boiler, Knocked Down and Crated for Export Shipment. Note the Small Volume for Packing in Minimum Space.

Cleaning of Heine Boilers

ALL cleaning—both inside and out—is performed from the front and rear. There are no openings in the sidewalls, or aisles between boilers.

Soot and dust are blown from the tubes by a soot blower, which is provided with every Heine Boiler. It consists of a series of small nozzles which pass through the hollow stay-bolts, and which are supplied from permanent headers, so that the only manual labor required is to open and close the valves. The jets of steam issuing from the main nozzles create an intense momentary draft

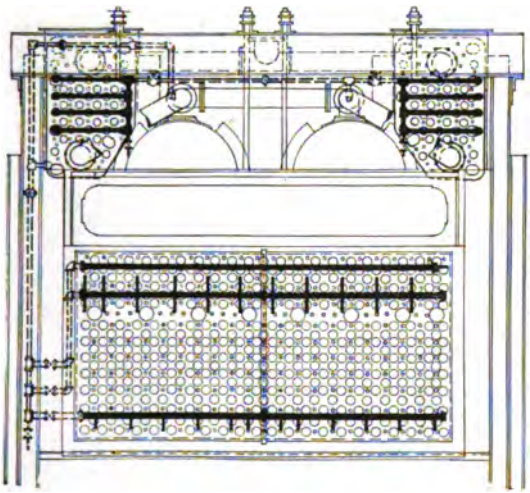

Front View

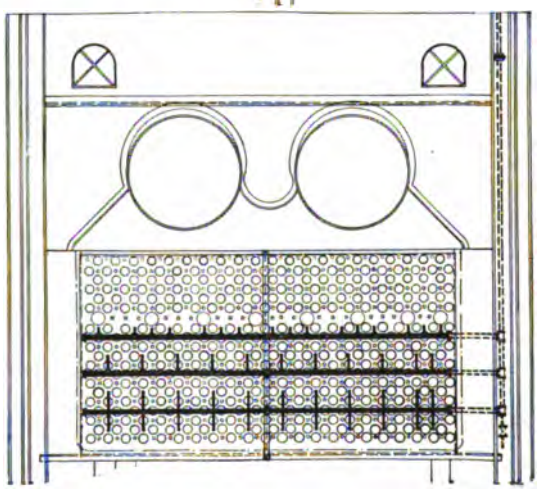

Rear View

Soot Blowing System.

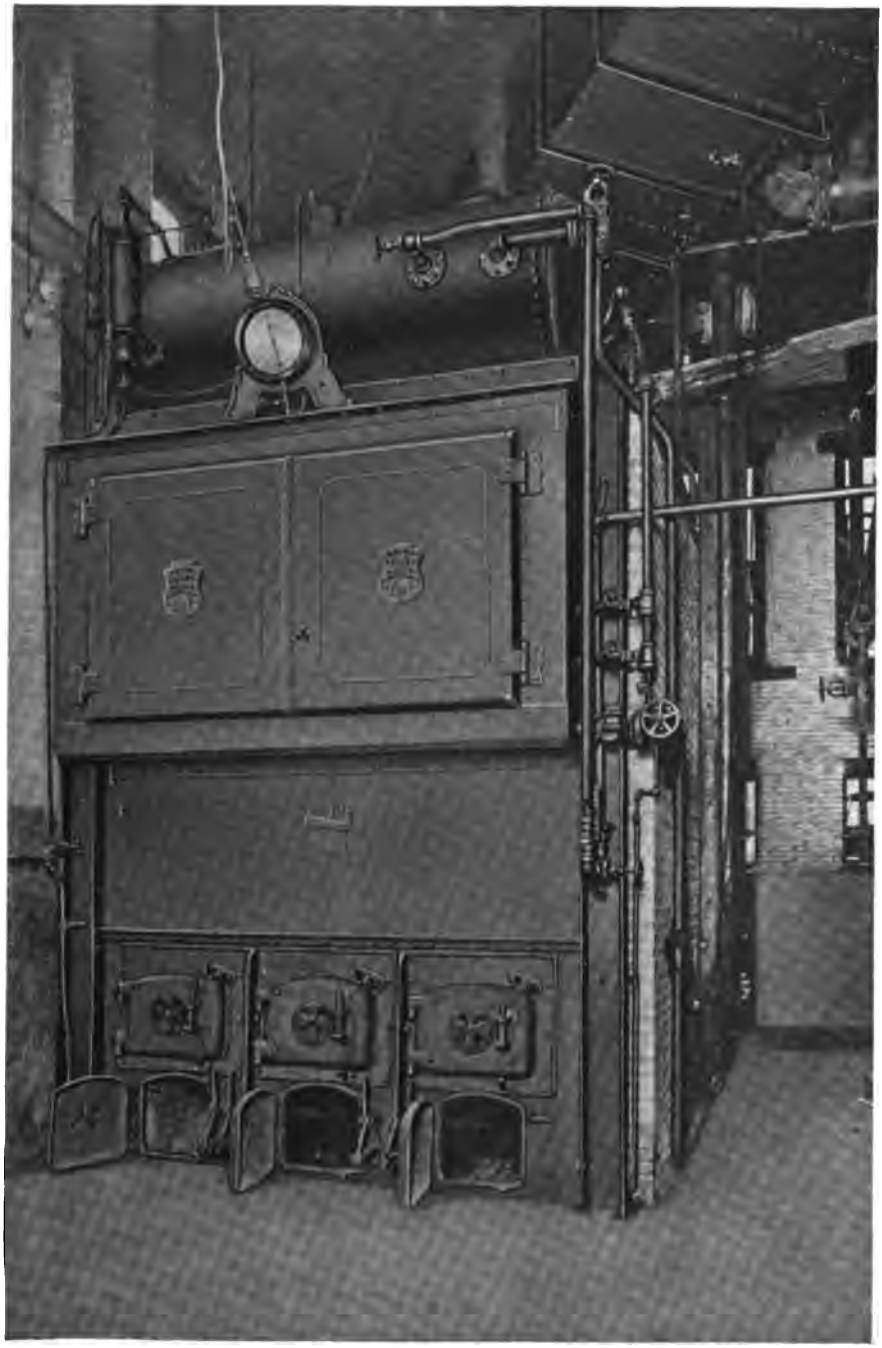

Standard Fire Front of Heine Cross Drum Boiler.

which effectively dislodges the soot and dust and carries it to the uptake. The auxiliary jets are so located as to stir up accumulations on the baffling and in all corners. This work is done in a few minutes, generally during the noon rest, or just before or after closing down at night. It is so easy as to be entirely out of comparison with the old-fashioned "steam-lance," whose use is naturally neglected whenever possible. Thorough cleaning is immediately profitable as may be seen by the quick drop in temperature of the exit gases.

Cleaning doors are provided on each side of the drum so that accumulations of dust and soot can be easily and quickly removed from the space over the upper baffle beneath the drum. The combustion chamber is cleaned through a door in the wall under the rear waterleg.

The interior of the drum is thoroughly inspected through the manhole in the rear head, which also permits of attention to the mud-drum, deflection plate, etc.

The inside of the tubes is washed by a stream of water directed through some of the handholes. Only a few of the handholes need be opened for this purpose, since each gives sufficient access to four or five of the surrounding tubes. In scraping the tubes, however, each handhole must be opened to admit the scraper, although in both this and the washing process the handholes at one end only are opened.

As only straight tubes are used, every part of the boiler can be reached, properly and quickly cleaned, and *visually inspected,* so that there is absolutely no uncertainty as to its condition.

Renewing tubes is done from the outside as in cleaning tubes, the men standing erect and working comfortably and quickly. The inside of the box-waterleg is easily cleaned and inspected, because all the hand holes give light and access to one space.

Heine Cross Drum Boiler—Land Service

THE Heine Cross Drum Boiler for land service, page 44, consists of two box headers carrying a nest of inclined tubes and of a drum placed above and across, slightly to the rear of the front or lower header. The drum is connected to the top of each header by a row of tubes—short, nearly vertical, to the front header—and long, nearly horizontal, to the rear header.

The main nest of tubes, with the headers, form a virtually closed or complete circulation system of remarkably low resistance owing to the capacious headers. The steam rises in the rear header, where its primary separation from the water is promoted by a device at the upper part. It then flows along the almost horizontal tubes, parting with most of the entrained water by gravity, to the final separator in the steam drum, where it is dried by centrifugal action set up by a deflector. The water carried into the drum

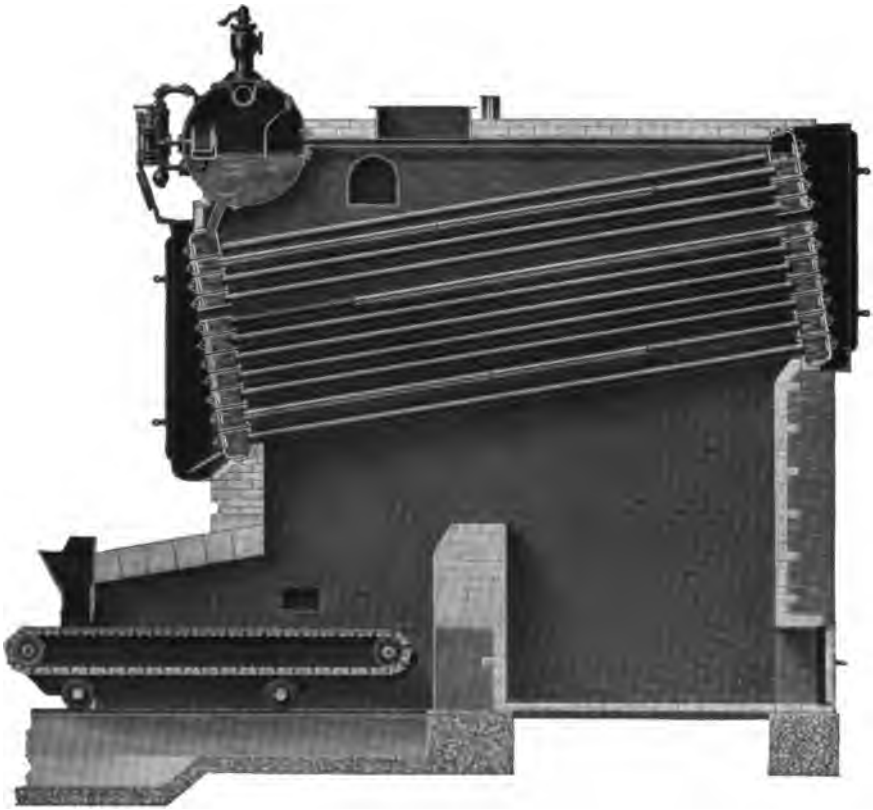

Longitudinal Section of Heine Cross Drum Boiler with Chain Grate Stoker.

is returned, together with the new feed water, to the circulation system through the short tubes leading into the top of the front header. Steam is drawn from the ample storage space through a dry pipe extending nearly the whole length of the drum and provided with small holes on the upper side.

This closed circulating system and the means used in collecting and drying the steam while maintaining quiet water in the drum, is the outcome of exhaustive and prolonged research into the direction and velocity of flow in the different rows of tubes. As a result the tubes and baffling have been so proportioned and arranged that the overload performance of Heine Boilers of this type is acknowledged by users as a notable achievement.

The mud-drum is constructed and operated on the same principle as that employed in the longitudinal drum boiler, described on pages 19 and 35. The movement of the feed-water therein is very slow, so that dissolved impurities which are thrown down at steam temperatures are deposited, as is matter carried in suspension. As the deposit is not hardened by exposure to fire temperatures, it remains as an easily blown-off sludge. Owing, also, to the slow movement of the feed water in the mud drum, it is heated to the boiling point before passing into the circulation system, so that Heine Boilers can be heavily driven with cold feed water. As the water issues from below the surface in the mud-drum, any oil accumulated does not enter the boiler proper, but is discharged through the blow-off.

Except in large boilers, the drum is made of a single sheet, with longitudinal double-strapped butt-joints. The heads are dished to a radius equal to their diameter, so that internal staying is not required. One head is generally provided with a flanged manhole with pressed steel cover and yoke; but when more than two boilers are set in battery, the manholes of all but the end boilers are placed in the drum proper instead of in the head.

A reinforcing plate is riveted to the drum, where each row of tubes enters. Forged steel pads are provided for the feed, blow-off, and water column connections, and pressed steel saddles, page 44, for safety valve and main steam outlet—all shaped to a snug fit on the drum, and either threaded or with stud-bolts to fasten the connections.

The box headers consist of two heavy steel plates with long radius flanging at top and bottom and with flat parts formed at the proper angle to allow the drum tubes to enter squarely; these plates are fully annealed before assembling. They are connected by a single-riveted lap joint, no butt straps being required. The resulting boxes are closed by trough-shaped end-plates, flanged by hydraulic machinery at a single heat to a close fit, and riveted to the side plates. The holes in the tube and handhole sheets are accurately located and bored to exact diameters to secure proper angular relation between the drum tubes and those of the main bank.

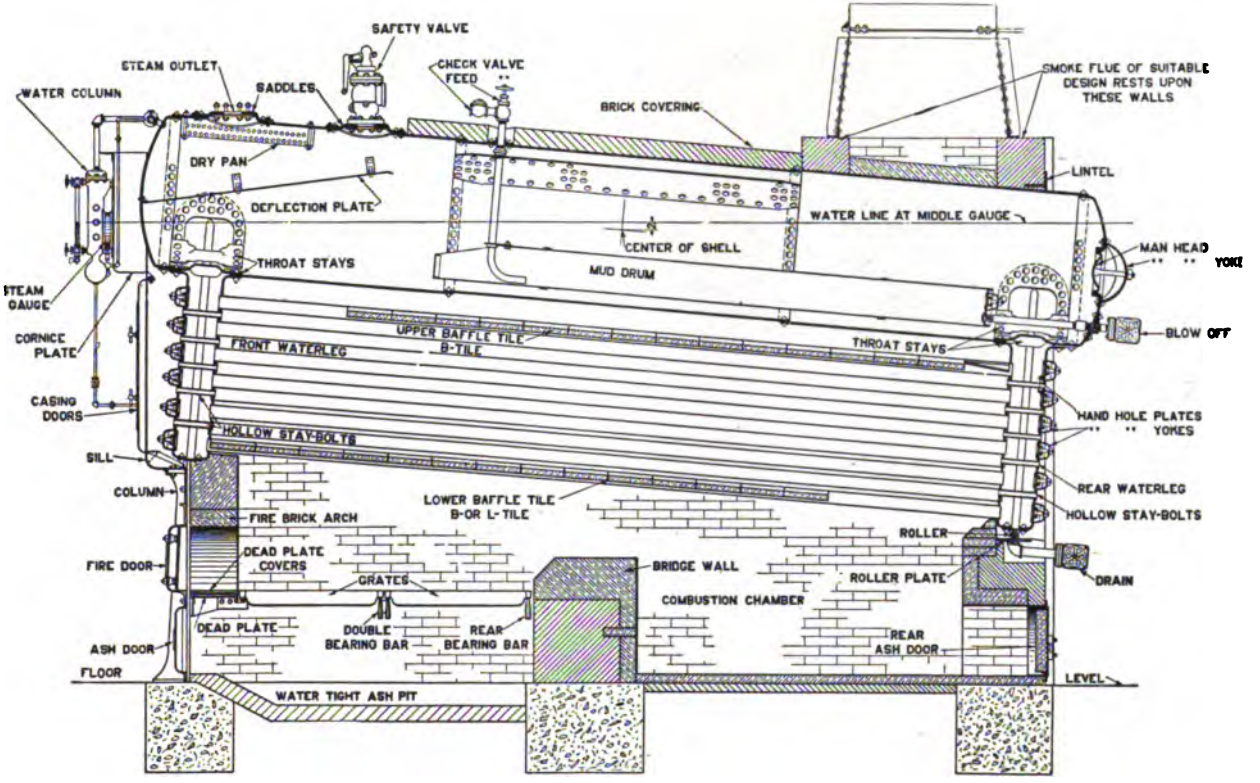

Longitudinal Section of Heine Standard Boiler.

These headers are stayed by hollow staybolts, page 25, of tested seamless tubing, which are screwed into tapped holes in both plates and the projecting ends neatly upset.

The handholes are opposite the tube ends and are closed by one of several methods—cast iron or drop forged steel plates and gaskets making joints on the inside, or the Key handhole caps which are expanded in and require no gaskets, page 27.

The tubes are the best quality lap-welded mild steel, made especially to Heine specifications. They are 3½-in. diameter, secured by roller expanders and the ends flared for additional strength.

The steam drum and the lower header are usually at the front end of the boiler, but to save head room this arrangement can be reversed.

The front of the boiler is carried by columns which are secured to heavy lugs riveted to the header end plates. These columns are made of any length to give the desired height of furnace. Similar heavy lugs are riveted to the rear header, and these are connected to the rear columns by massive suspender bars. This provides a flexible support which allows for expansion and contraction due to temperature changes.

The whole boiler is enclosed by brick side-walls, the rear wall being underneath the rear header. The top is closed by fire-brick and insulating covering, carried by T-bars resting on the side-walls.

Casing doors at front and back give access to the headers for cleaning and inspection.

Safety valves of proper size, a large high and low water alarm column with quick acting shut-off device operated from the floor by chains, and three try cocks, are provided. A steam gage is attached to the boiler front, and feed, check and blow-off valves are supplied and located so as to be easily accessible and conveniently manipulated. The required buck-stays, cleaning doors and anchor rods are supplied.

The soot blower system applied to the cross-drum boiler consists of the nozzles inserted through the hollow staybolts of the rear header. The main jets create an intense momentary draft, which dislodges the accumulations from the tube surfaces and carries them to the uptake. Auxiliary nozzles are so located as to stir up and dispose of any accumulations on the baffle tiling.

Heine Marine Boilers

THE Heine Cross Drum Marine Boiler, page 50, is similar to the cross drum boiler for land service, the main difference being that it is shorter due to the lack of space. The standard marine boiler has 3½-in. tubes throughout; but for oil-fuel, space is saved and satisfactory results obtained by the use of 2-in. tubes in the main bank.

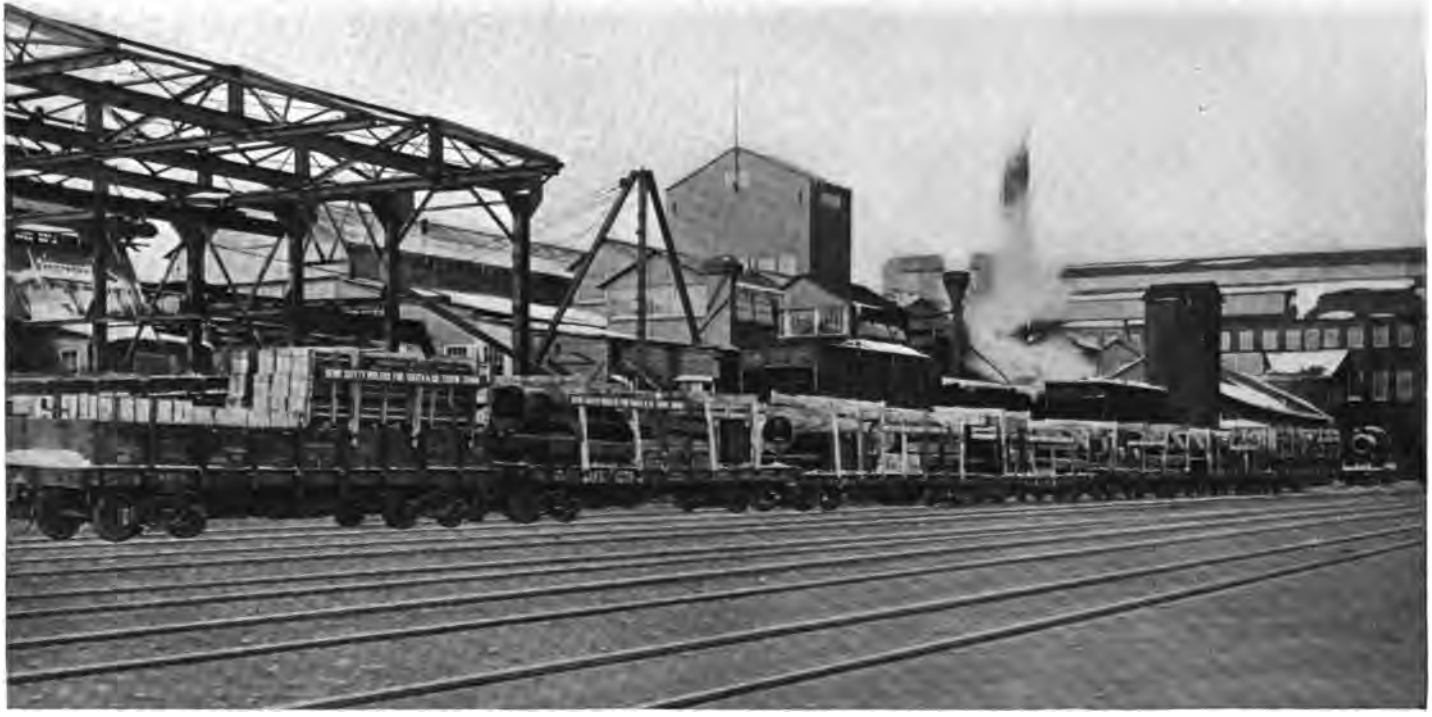

Method of Shipping Heine Boilers Crated for Export.

For low or medium superheat temperatures, superheaters of the type used for land installations are fitted. They are of the "waste-heat" kind, placed in the base of the uptake, as close as possible to the exit of the gases from the boiler. For higher superheat, the elements are passed through the middle of the main tube bank, where they are in contact with gases of high temperature.

In ocean service the feed water cannot be kept entirely free from sea water, which sets up electrolytic action. Zinc plates are therefore placed in the drum to act as the electro-negative agent and prevent corrosion. In the Heine Marine Boiler the United States Navy standard is used—¾ sq. ft. of exposed zinc for each 100 sq. ft. of heating surface—and the zinc plates are so secured as to ensure perfect electrical contact with the metal of the boiler. At the same time they are easily removable. A pressed steel basket is provided to catch the disintegrated zinc.

The setting consists of a framework of rolled steel shapes so constructed that the four main columns—one on each side of each box header—are tied and securely braced against any motion. This framework carries a steel plate casing lined with firebrick, non-conducting material, or a combination of the two.

The construction and operation of Heine Marine Boilers is explained more completely in another Heine publication—Marine Boiler Logic—which is sent upon request to those interested.

Standard Boiler Specifications

A NATIONAL and even an international standard of steam-boiler design is represented by the Boiler Code formulated in 1914 by the American Society of Mechanical Engineers, and since that time kept up to date by frequent revisions. The value of the Code is indicated by the fact that it has been adopted by more than twelve states in this country, by foreign countries, and by branches of the United States Government.

For many years the necessity of uniform boiler specifications has been recognized both by makers and users of boilers. In 1889, the American Boiler Manufacturers' Association adopted what were known as the Uniform American Boiler Specifications. These specifications, which were revised in later years, gave information relating to material, construction and calculation for all kinds of boilers. In this fundamental work Col. E. D. Meier, founder and president of the Heine Safety Boiler Co., until his death in December, 1914, took an important part. Colonel Meier was chairman of the committee which prepared the first specifications in 1898, was president of the American Boiler Manufacturers' Association from 1908 to 1914, and was its secretary for several years previous to 1908.

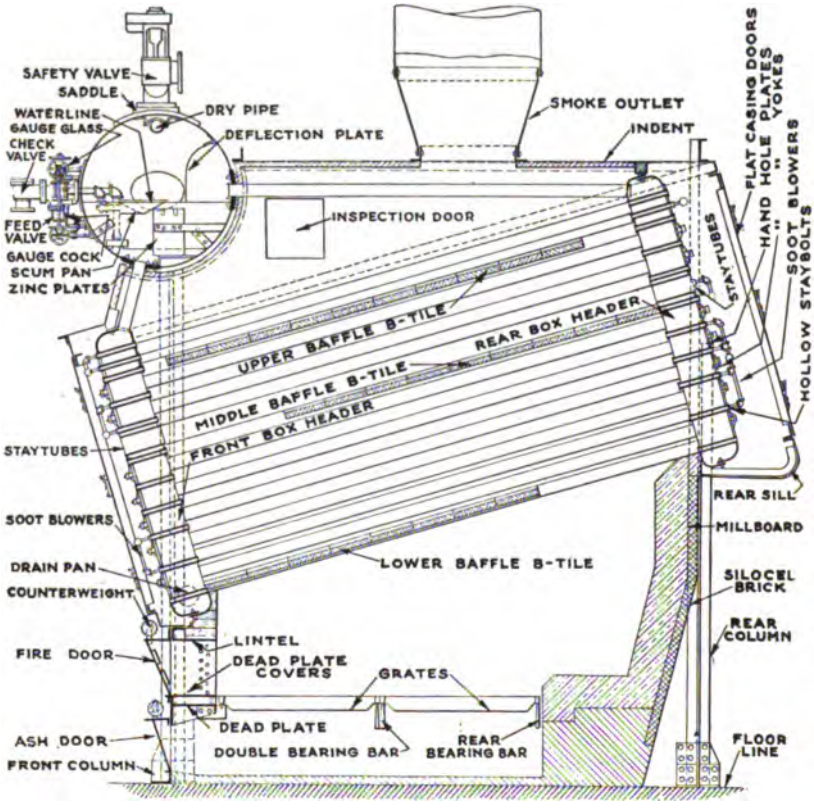

Longitudinal Section of Heine Cross Drum Marine Boiler.

In 1907 a board was appointed by the state of Massachusetts to prepare a set of boiler rules. The members of this board represented different boiler interests, such as the users, makers, insurance companies, and operating engineers. The chairman of the board was the chief inspector of the Massachusetts Boiler Inspection Department. The Massachusetts boiler rules were issued in 1909 and engineers considered that they represented a real advance in the art. From a national standpoint, however, the Massachusetts rules simply made one more set of conditions with which the boiler manufacturers and users had to comply. A boiler that is safe in Massachusetts certainly should be safe in any other state of the Union, but practically every state (at least in 1911) had special requirements for boiler construction, and these were rigidly enforced.

The remedy for this condition was found by Colonel Meier; he had already noticed the beneficial working of the Steamboat and Locomotive Inspection Laws under Federal control. The best answer to the problem was to have the different states adopt uniform specifications for boilers, since a constitutional amendment would be required to put stationary boilers under Federal supervision. The different state legislatures and other authorities were willing to use such specifications, provided they could be assured of their value.

In 1911 Colonel Meier, then president of the American Society of Mechanical Engineers, suggested that a committee of the Society "formulate standard specifications for the construction of steam boilers and other pressure vessels and for the care of same in service." This committee came into existence on Sept. 15, 1911, and was instructed to formulate a model engineers' and firemen's license law, a model boiler inspection law, and a standard code of boiler rules. Its first chairman was John A. Stevens, who had been a member of the Massachusetts Board of Boiler Rules. The boiler makers were represented by H. C. Meinholdt, vice-president of the Heine Safety Boiler Co. Upon Mr. Meinholdt's death in 1913, Colonel Meier was appointed a member of the committee. The other members represented different interests connected with boiler operation and construction.

Three years were devoted to hearings and consultations. The Code was finally presented at the Annual Meeting of the American Society of Mechanical Engineers, in December, 1914, and on February 13, 1915, it was approved by the Council of the Society. In preparing the Code every source of information was utilized, in order that the boiler situation should be thoroughly covered. Colonel Meier's original committee of seven members was assisted in the final preparation of the Code by eighteen notable boiler specialists in the design, installation and operation of boilers.

The First Heine Boiler, Built in 1882. Still Good for High Pressure after Thirty-five Years of Continuous Service.

Comparative Sizes of the First Heine Boiler and a Standard 500 H. P. Boiler.

Although in ill health, Colonel Meier was interested in the Code until his death. According to John A. Stevens, Chairman of the Code Committee:

> "Colonel Meier took a most active part in the formation of the A. S. M. E. Boiler Code, and up to within a few days of his death, had it constantly before him. It is one of the regrets of the Committee that he could not have lived to see the fruition of the work he so wisely started."

The Boiler Code is too long to give in full here, but can be obtained from the American Society of Mechanical Engineers, 29 West 39th Street, New York, by the payment of fifty cents. The Code is divided into two parts, the first applying to new installations, and the second to existing installations.

The Code as completed is much more far-reaching than the Massachusetts Rules. Quoting Mr. Stevens again, "It specifies in detail the chemical and physical properties of all materials entering into the construction of boilers, and gives rules, formulas and tables that have been checked and rechecked by men of national reputation, and in many cases verified by testing laboratories; that is to say, in many cases, rules or formulas were withheld until actual tests in laboratories were made in order to prove the mathematics."

The Committee formulating the Code has been made permanent, and holds regular meetings for the purpose of interpreting any points on which questions are raised. From time to time the Code is revised to include the latest knowledge of steam-boiler construction.

The work of bringing the A. S. M. E. Boiler Code into use is being done by the American Uniform Boiler Law Society, which is carrying on an educational campaign in the states that have not yet adopted the Code. The Society is made up of representatives of the organizations interested in the construction or operation of steam boilers. In many states laws have been passed creating a board of boiler rules. Such boards are authorized to adopt the standard A. S. M. E. Code, and to amend it in accordance with the amendments made by the Society.

State legislatures and authorities move slowly along engineering lines, but the use of the Code is increasing, and in time it undoubtedly will be adopted in every state of the Union. At present "Code" boilers are required in certain states, but in others boilers built to less rigid rules can be installed.

All Heine Boilers, no matter in what state they are used, comply with the requirements of the Code. The Heine Company is also assisting in its adoption through the work of its executives on the Code Committees of the American Society of Mechanical Engineers, the American Boiler Manufacturers Association and the American Uniform Boiler Law Society. The Company believes that the Code should be adopted not only in every state in this country, but should also be made international in scope.

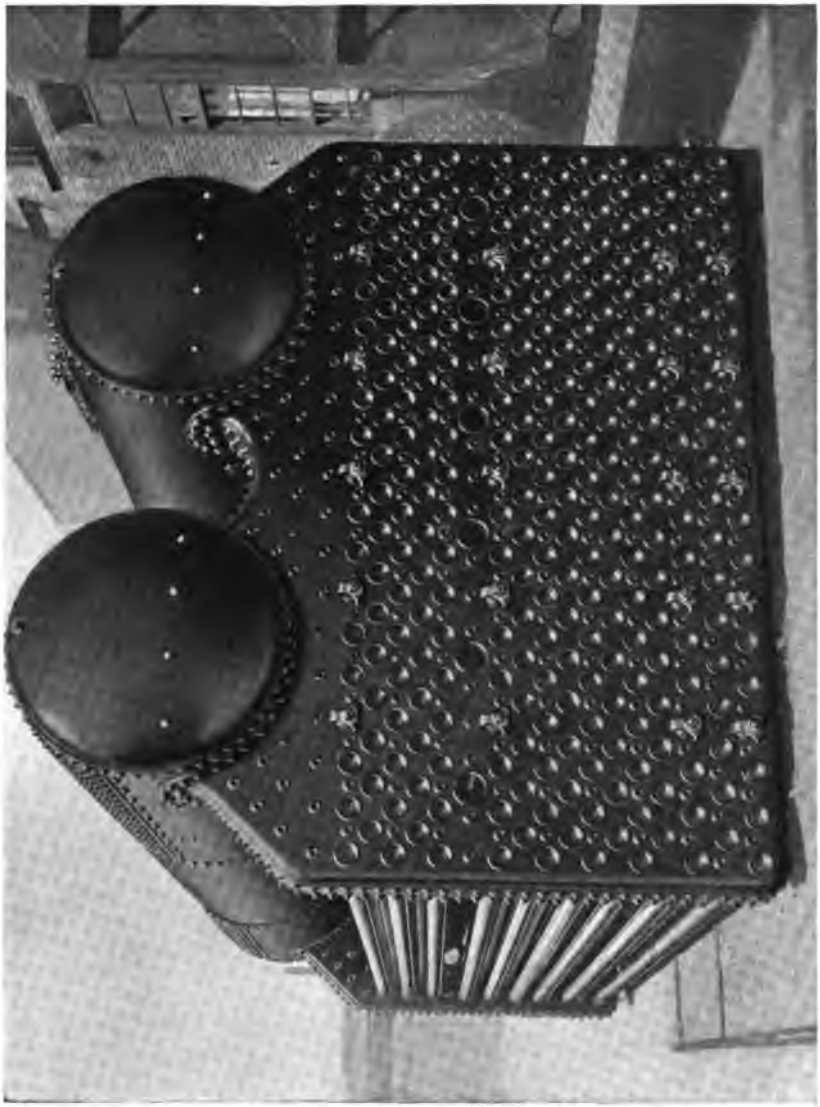

Heine Standard Double Drum Boiler with Key Handhole Caps.

CHAPTER 2

BOILER RATING AND DESIGN

THE rating of a machine should naturally be expressed in terms of the useful work done by the machine. The useful work done by a boiler is represented by the heat transferred to the water in the boiler; thereby causing evaporation.

In actual practice boiler pressures, initial steam conditions and feed water temperatures vary widely. If performances are to be compared, they must be reduced to an equal basis. The actual evaporation is therefore referred to an equivalent evaporation from a feed water temperature of 212 deg. into dry-saturated steam at the same temperature, or as it is commonly expressed, "from and at 212 deg. Fahr."

The heat added to each pound of water under these conditions will then be L at 212 deg. The 1915 A. S. M. E. Boiler Code stipulates that this quantity is 970.4 B. t. u. per pound. Goodenough gives a slightly higher value (971.7) which is probably more accurate.

The heat actually absorbed by one pound of water while in the boiler will be $H - q$, where H is the heat content of the steam as it leaves the boiler —it may be wet-saturated, dry-saturated or superheated—and q is the heat of the liquid at the temperature of the feed water entering the boiler.

$$F = \frac{H - q}{971.7} \qquad (1)$$

gives, therefore, the pounds of water evaporated from and at 212 deg. and equivalent to the actual evaporation of one pound.

This quantity F is called the "factor of evaporation." When multiplied by the pounds of water fed to the boiler for any given time, the product is the equivalent evaporation from and at 212 deg., expressed in pounds for that time. This equivalent evaporation is usually expressed, however, in pounds per pound of coal.

Boiler Horse Power

A boiler horsepower was originally defined as the actual evaporation of 30 lb. of water per hour from feed water at 100 deg. into dry-saturated steam at 70 lb. gage pressure. When the term "equivalent evaporation" came into use, however, it was applied to the boiler horsepower, which is now defined as the equivalent evaporation of 34.5 lb. per hour from and at 212 deg.

A formula for finding this term would be expressed thus:

$$\text{B. H.P.} = \frac{(H - q)\ (\text{lb. } H_2O \text{ fed per hr.})}{971.7 \times 34.5} = \frac{F \times \text{lb. } H_2O \text{ fed per hr.}}{34.5} \qquad (2)$$

The boiler horsepower and the engine horsepower are in no way related. When the original boiler horsepower unit was selected a one horsepower boiler would supply a one horsepower engine. Increase in the economy of engines, however, has changed that ratio until now a 100 horsepower boiler will supply 250 engine horsepower, at least.

The term boiler horsepower has thus lost much of its significance. Almost any modern boiler will run continuously at from 150 to 200 per cent over its rating and for short periods 400 and even 500 per cent have been reached.

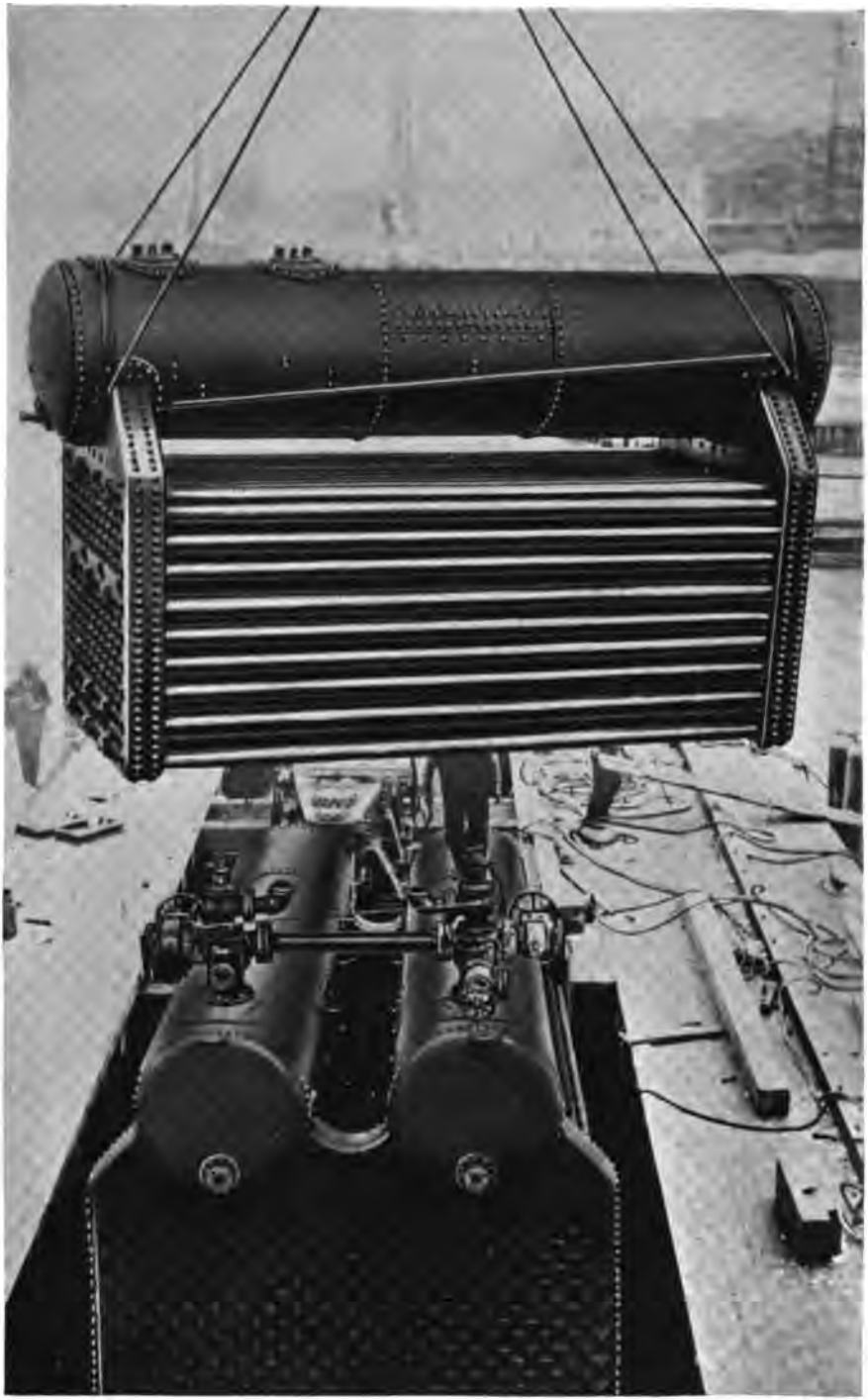

Lowering Heine Standard Boiler into Hull of Dredge Boat "Texas" of The Atlantic, Gulf & Pacific Company.

Heating Surface

The better measure of boiler capacity is the *heating surface.* Heating surface is that surface which has hot gases on one side of it and water or steam on the other side. By the A. S. M. E. code, it is the surface "in contact with fire or hot gases." In all water-tube boilers and in most fire-tube boilers (the common vertical and Manning types are exceptions) the whole surface of the tubes is heating surface. Tube heating surface constitutes by far the greater part of the total, in any type of boiler. As boilers are built, it is usually the most effective part, except in internally-fired boilers. Additional heating surface is provided in horizontal tubular boilers, by the shell up to the line where the setting racks in, and by the heads up to the same level. The inner faces of the waterlegs, and part of the drum shell, in a Heine boiler are heating surface.

Formerly 10 or 12 sq. ft. of heating surface was allowed per boiler horsepower. The corresponding *rate of evaporation* was usually around 3 lbs. of water per sq. ft. of heating surface per hour, for it was observed that if the rate of evaporation greatly exceeded 3 lbs. per sq. ft., the increase of coal consumption outran the gain in water evaporation, and the flue gas temperature became high. In good modern design, rates of evaporation much higher can be secured without serious sacrifice of efficiency. As high as 10 lb. is frequent in marine practice. From 4½ to 6 lb. is justified in power stations carrying highly variable loads, the slight loss in economy being more than offset by the reduced investment for boilers and power house space. The obtaining of these higher rates of evaporation is chiefly a matter of draft. Their attainment without a serious sacrifice of efficiency is a matter of boiler design. The proportions, tube sizes and spacing, baffling and general arrangement must all be properly worked out. The higher rates cannot be obtained at all with certain types, the common vertical boiler being an example.

The cost of a given boiler, and also its size, varies almost directly with the amount of heating surface. Hence the desirability of high rates from an investment standpoint.

Grate Surface

The grate surface is important in determining the capacity of a boiler, although related only indirectly to its efficiency. The rate of combustion depends upon the kind of fuel and the draft. The latter may be determined by reference to the chart given in Chapter 5 on CHIMNEYS.

For oil, there is no grate, and capacity is based upon furnace volume. In marine work a maximum oil consumption of 10 lb. per cu. ft. of furnace volume per hour is permissible, but in land practice much less than this is allowed.

The grate surface required for hand-fired boilers under normal operation can be found by:

$$G = \frac{33{,}480\ H.\ P.}{B\ K\ E} \qquad (3)$$

G = Total grate surface, sq. ft.
$H.P.$ = Horsepower rating of boiler.
B = Heat value of coal, B. t. u. per lb.
K = Rate of combustion per sq. ft. of grate per hr., lb.
E = Combined efficiency of boiler and furnace, per cent.

Heating Surface Ratios

A ratio of 1 sq. ft. of grate area to 35 or 40 sq. ft. of heating surface is common for boilers that operate at rated capacity, when burning commercial sizes of anthracite. For overload capacity the ratio is taken at about 1 to 25, and for burning low grade coals a forced draft system is necessary. For bituminous coals, the ratio of grate area to the boiler heating surface runs as low as 1 to 30, and as high as 1 to 70 in different instances. *L. S. Marks* recommends the ratios, of grate proportions to operating economy and boiler capacity, given in Table 1.

Table 1. Heating Surface Ratios—Bituminous Coals.

Name of Coal	Ratios of Grate Surface to Heating Surface				Grate Bar Openings, Inches	
	For Economy		For Capacity			
	Run of Mine	Slack	Run of Mine	Slack	Run of Mine	Slack
Va., W. Va., Neb., Pa.	1 to 60	1 to 55	1 to 55	1 to 50	½	⅜
Ohio, Ky., Tenn., Ala.	1 to 55	1 to 50	1 to 50	1 to 45	⅜—½	¼
Ill., Ind., Kan., Okla..	1 to 50	1 to 45	1 to 45	1 to 40	⅜—½	¼
Colo., Wyoming.....	1 to 50	1 to 45	1 to 45	1 to 40	⅜	¼

Heat Transfer

The rate of transmission of heat through the boiler surface depends chiefly upon the difference in temperature between the hot gases and water on the two sides of the heating surface, and upon the rate of movement of the two fluids across the surface. For those surfaces directly exposed to the fire, the transmission is due chiefly to radiation, which varies as some power of the temperature difference. A sustained high temperature in this region is therefore important. Other surfaces act more by convective transmission. The fluid flow then is of chief importance, the transmission varying about as the first power only of the temperature differences. As forced water circulation is not employed in large boilers, the water flow cannot be controlled at will. In general, the harder the boiler is driven, the better will be the water circulation, which is the condition desired.

The heating surface directly exposed to the fire does most of the work. *Gebhardt* states that this would be true even if the furnace transmission varied as the first power only of the temperature. Here the last 20 per cent of the surface reduces the flue gas temperatures only 65 deg. This is of course an understatement. Allowing for the much greater effectiveness of that portion of the surface immediately adjacent to the furnace, the last 20 per cent must necessarily reduce the flue temperature considerably less than 65 deg. Even at 65 deg., however, with ordinary operation, the omission of the last 20 per cent of the surface would cause a loss of only about 300 B. t. u. per pound of coal, or about 2 per cent. Hence where first costs are high or loads variable the ratio of heating surface to grate surface should be low. Hence also the slight loss of efficiency due to increasing rates of evaporation. In European practice, the heating surface has been strictly limited and economizer surface employed to obtain low final stack temperatures. The fluid temperature difference is greater at the economizer, so that one square foot of economizer surface more than replaces a square foot of boiler surface.

See Chapter 11 on HEAT.

Gas Passages

Gas circulation is subject to control both in design and operation. Since the effort is made to have all of the gas strike all of the heating surface (thus keeping down the flue temperature and stack loss), the gas velocity at a given rate of driving is determined solely by the nature and dimensions of the gas passages. Formerly certain proportions of the grate surface were allowed for the cross-sectional area through or around tubes, but the results were only accidentally correct. With proper operation, the kind and weight of coal to be burned per hour determines within reasonable limits the weight of gas produced per hour. The volume of this gas depends upon its temperature, and the rate of decrease of temperature from furnace to stack has been determined by experiments for certain boilers. The velocity of this gas depends upon the draft (which is related to the rate of combustion) and upon frictional resistance, all of which can be valuated with fair accuracy. The volume and the velocity being known, the cross-sectional area necessary for gas passage can be calculated. With high draft, small area and high velocity, gases yield their heat at a rapid rate, but they are also moving to the stack at a rapid rate. The best rate of yield as compared with rate of movement determines the cross-sectional areas. For anthracite coal at low rates of combustion, the old rule was to use 1/7 of the grate surface for the area over the bridge wall, 1/8 for the flue area and 1/9 for the chimney area. Areas naturally decrease from passages near the furnace to those near the stack.

Areas for gas passage can be correct, and operation nevertheless unsatisfactory, if the details of the baffling are wrong. The gas should as far as possible be compelled to strike the surfaces without indulging in short cuts or leaving dead spaces where the circulation is sluggish. A boiler is a machine, the moving parts being gas and water, and these motions must be correct if efficiency is to be good.

Baffling

PARTITIONS are placed among the tubes to direct the flow of the hot gases. These baffles can be vertical, causing the gases to flow across the tubes; or horizontal, so that the gases travel the length of the tubes. In selecting the design of baffling for a given installation, its flexibility, ease and cost of upkeep, and influence on heating surface must all be considered. Investigations by the *Bureau of Mines* show:

(1) A boiler whose heating surface is arranged to give long gas passages of small cross-section will be more efficient than a boiler in which the gas passages are short and of larger cross-section.

(2) The efficiency of a water-tube boiler increases as the free area between individual tubes decreases and as the length of the gas pass increases.

(3) By inserting baffles so that the heating surface is arranged in series with respect to the gas flow, the boiler efficiency will be increased.

These results point to the desirability of horizontal baffles and the importance of the long, unchilled flame and the large furnace volume obtained by their use.

The entire heating surface in a boiler is not active, because of the eddies peculiar to gas flow. With practical baffling, the inactive surface caused by dead gas pockets can be minimized.

During tests by *W. N. Polakov* on the vertically baffled boiler, shown in Fig. 1, pyrometer measurements showed that only about 60 per cent of the surface was an active heat absorber, the remaining 40 per cent representing the dead pockets. Horizontal baffles may not eliminate the dead regions, but they can reduce the inactive surface considerably by decreasing

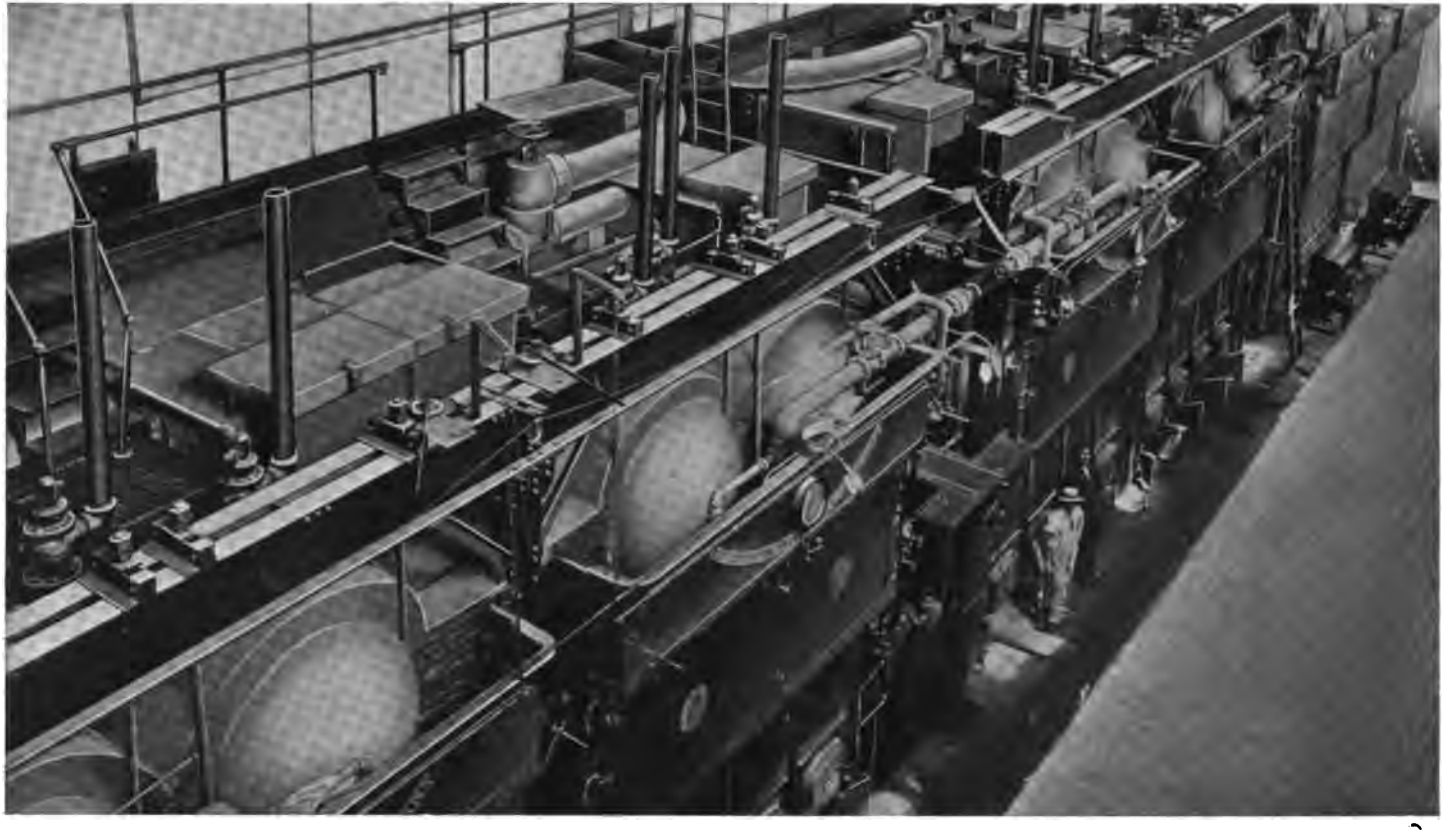

Boiler Room of the Pepperell Mfg. Co., Biddeford, Me., containing 4000 H. P. of Heine Standard Boilers and Heine Superheaters. Boilers in Background are set over Combustion Engineering Type E Stokers.

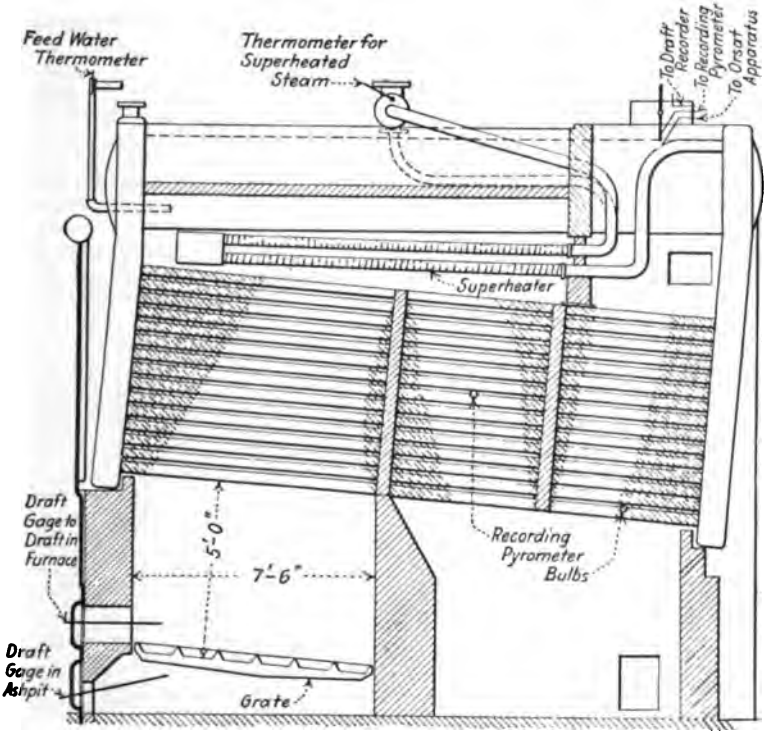

Fig. 1. Dead Regions in a Vertically Baffled Boiler. Shaded Parts show Inactive Surface.

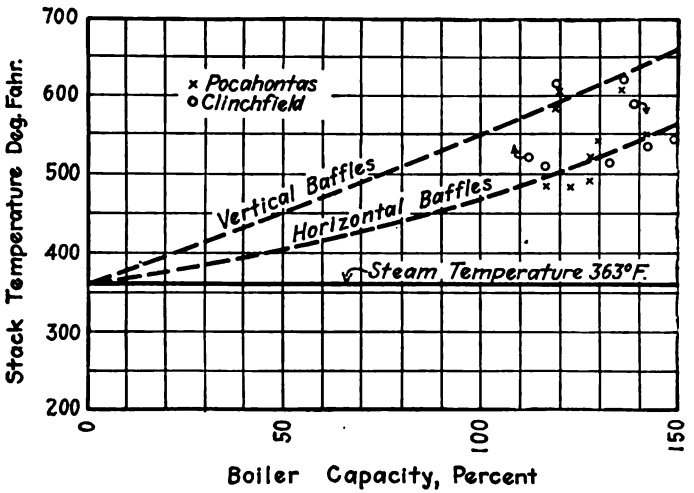

Fig. 2. Comparison of Stack Temperatures in Test Boiler when Baffled Vertically and Horizontally.

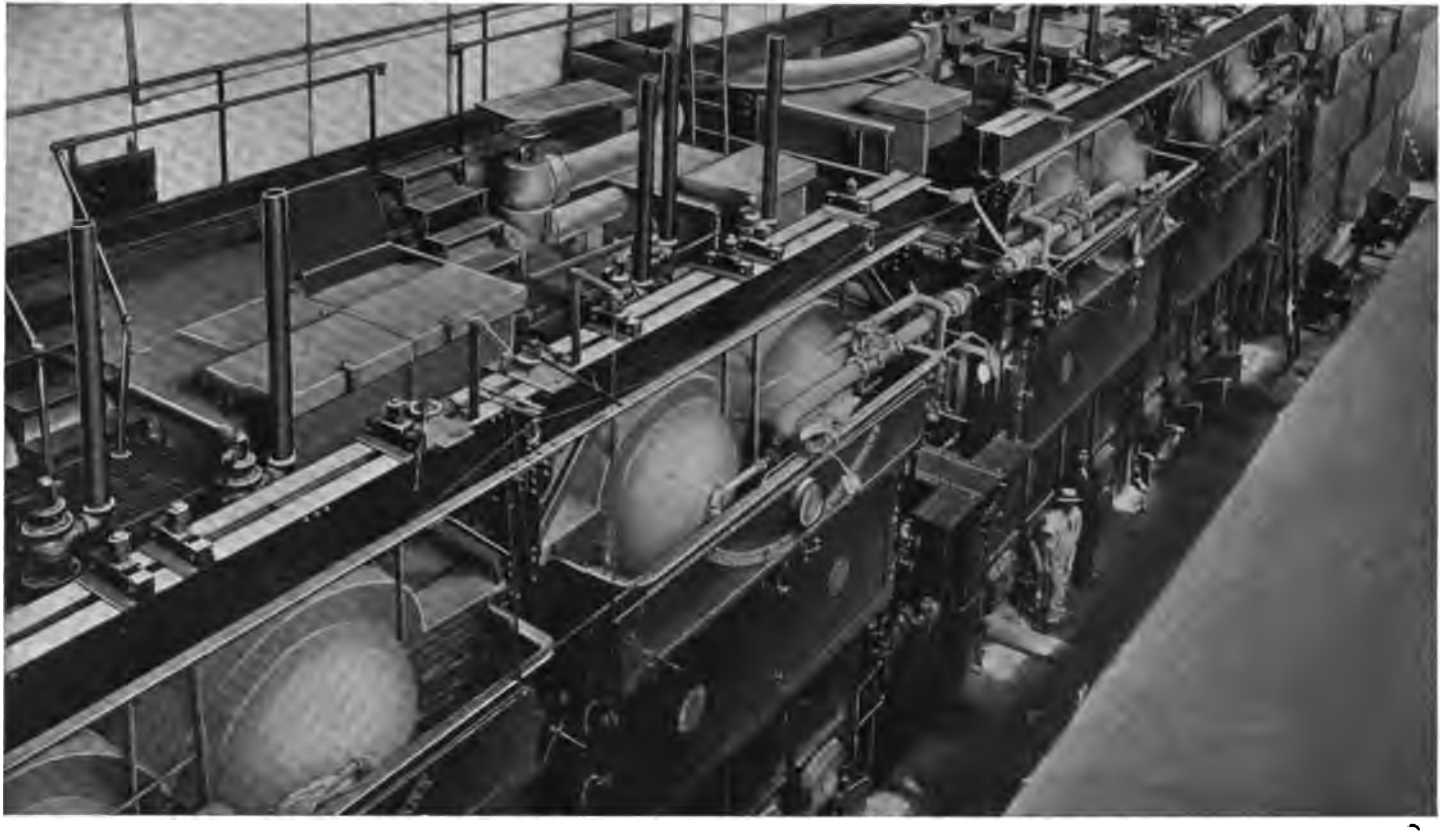

Boiler Room of the Pepperell Mfg. Co., Biddeford, Me., containing 4000 H. P. of Heine Standard Boilers and Heine Superheaters. Boilers in Background are set over Combustion Engineering Type E Stokers.

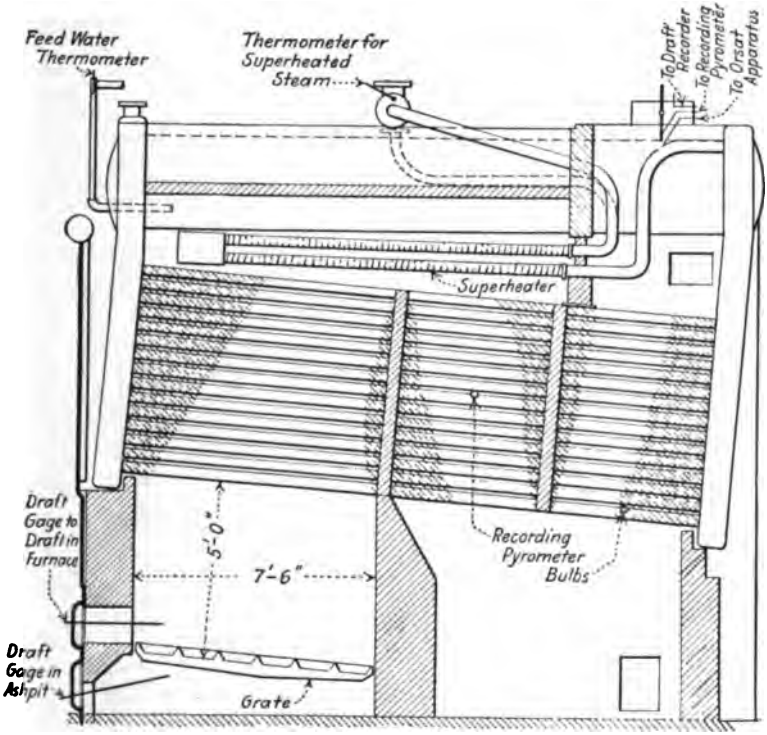

Fig. 1. Dead Regions in a Vertically Baffled Boiler. Shaded Parts show Inactive Surface.

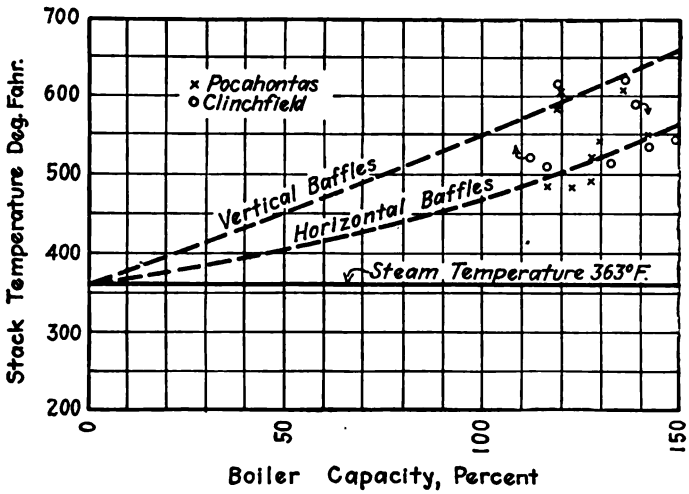

Fig. 2. Comparison of Stack Temperatures in Test Boiler when Baffled Vertically and Horizontally.

the size of the dead corners. In Heine boilers, Fig. 5, a large percentage of the tube surface absorbs heat because of the baffle construction.

Horizontal baffles are recognized as standard for smokeless settings. Smokeless combustion usually cannot be obtained with vertically baffled boilers unless the setting is very high. With hand-firing and bituminous coal, vertically baffled boilers are not allowed where smoke ordinances are stringent. For this reason horizontal baffling has been applied to many boilers designed originally with vertical baffling. By substituting the horizontal for the vertical pass, a longer flame travel between the furnace and the tube region is obtained, without increasing the floor space.

In tests by *Henry Kreisinger and M. T. Ray,* the draft through the vertically baffled boiler was 0.5 in. for an average load of 128 per cent. When the same boiler was baffled horizontally, the draft was only 0.375 in.

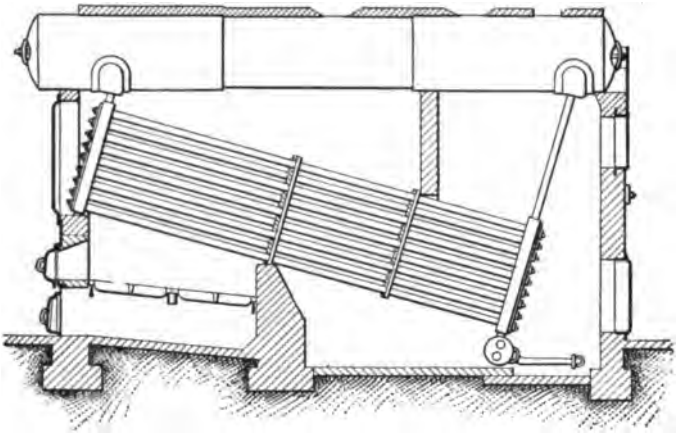

Fig. 3. Original Vertical Baffling of Test Boiler.

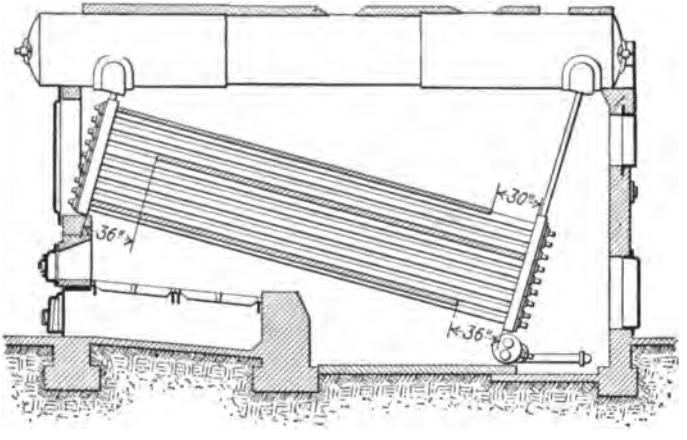

Fig. 4. Two-Pass Horizontal Baffling of Test Boiler.

at 127 per cent load, with the same CO_2 percentage. These tests were conducted to determine whether horizontal passes gave good results when burning Pocahontas and Clinchfield (high-volatile) coals.

Nineteen tests were run under actual plant operating conditions with the same boiler, baffled as shown in Figs. 3, 4, and 5. Table 2 summarizes these tests. The flue-gas temperatures at the different boiler loads are shown in Fig. 2. At 120 per cent capacity, the average temperature with the vertical baffles was 590 deg., and with the horizontal baffling only 500 deg.

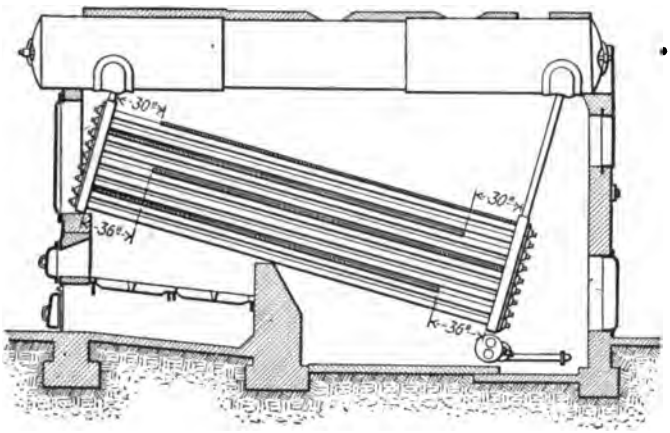

Fig. 5. Three-Pass Horizontal Baffling of Test Boiler.

Table 2. Results of Boiler Tests with Different Baffling.

	Original (Vertical) Baffling		Two Horizontal Passes		Three Horizontal Passes*	
Name of Coal	Pocahontas	Clinchfield	Pocahontas	Clinchfield	Pocahontas	Clinchfield
Number of tests averaged	4	3	4	3	4	3
Water evaporated under actual conditions per lb. of coal as fired, lb	7.95	7.49	8.54	8.18	8.83	8.52
Equivalent evaporation per lb. of coal as fired, lb	9.42	8.90	9.92	9.61	10.33	9.97
Average hp. developed	320	285	335	357	303*	298*
Maximum hp. developed	341	297	355	365	317	311
B. t. u. per lb of dry coal	14,828	14,122	15,050	13,801	14,731	13,750
Ash, per cent	4.9	7.9	4.72	10.26	5.5	9.85
Approximate efficiency of boiler and furnace, per cent	61.3	60.9	63.6	67.2	67.7	69.9

*On the test with three horizontal passes, higher capacity could have been developed, but the feed water was too hot and the injector would not feed it fast enough into the boiler

4200 H. P. Installation of Heine Standard Boilers and Heine Superheaters set over Taylor Stokers in the Plant of the Studebaker Corp., South Bend, Ind.

When the boiler is baffled horizontally much better results can be obtained with high-volatile coal. There is also a marked improvement, when the horizontal baffling is used, for Pocahontas coal. The horizontal three-pass baffling gave the highest evaporation and the horizontal two-pass developed the highest horsepower. With the two-pass horizontal baffling higher evaporation and horsepower can be obtained with Clinchfield coal, than with vertical baffling and the higher grade Pocahontas. The draft loss through the boiler is less for the horizontal two-pass than for the original vertical baffling. The number of turns taken by the gases is the same, but the resistance at the points of reversal is less with the horizontal two-pass baffling.

Smoke records from a boiler baffled vertically and later changed over to horizontal baffling are shown in Fig. 6. The vertical baffles were responsible for a high percentage of smoke, while with the horizontal baffles the boiler had a clean record.

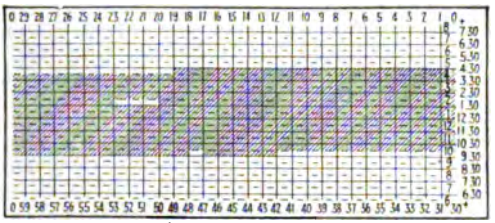

Vertical Baffle.

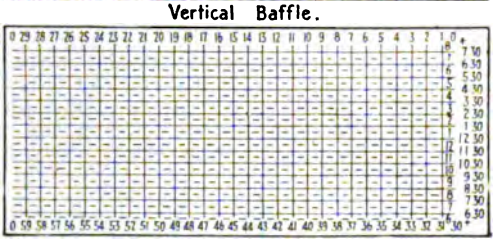

Horizontal Baffle.

Fig. 6. Smoke Charts.

Vertical baffles can be kept tight only with difficulty. Baffles that are not gas-tight allow the hot gases of combustion to short-circuit, resulting in high stack temperatures and a reduction in boiler efficiency. Because of the difficulty in installing the tiles, vertical baffles are often repaired with ordinary fire clay. With vertical baffling soot cleaning is difficult and the installation expensive. Frequently the cleaner is built in as a part of the baffles; when the tile crumble away both the soot cleaner and the baffle must be renewed.

According to the requirements, the horizontal baffles can be arranged for single, double, or triple gas-passes. Typical arrangements are shown in Chapter 4. The horizontal passes allow the gas to travel in series, in parallel, or for the two combined. The gases flow parallel to the tubes, as well as at right angles, when the pass is divided. The first baffle, Fig. 8, is then placed on the lowest row of tubes and extends to within 5 ft. of the rear waterleg. This baffle serves as a roof for the furnace and combustion chamber and permits of a simple stoker arrangement, with ample room for the gases to burn. The gases entering the boiler divide into two streams, one flowing beneath and the other above the middle baffle.

This rests upon the ninth row of tubes, with an opening at both front and rear. The top baffle extends from the rear waterleg to within several feet of the front waterleg, leaving an opening for the discharge of the gases from the boiler tubes. Before passing to the smoke outlet, all the gases flow under the boiler drums.

The baffle tile used in Heine boilers are of high grade refractory materials, designed for easy installation and to withstand the high temperatures. The shapes used in different settings are shown in Fig. 7. Cast-iron plates are sometimes used for the center set of two-pass horizontal baffles.

Capacity and Economy

Every mechanical device has its own type of characteristic curve in which efficiency is plotted as ordinates against output as abscissas. This characteristic curve for a steam boiler resembles the curve for a steam engine or turbine, or an electric motor or generator, in being convex upward and having a well defined though broad peak. With all these devices, the efficiency falls to zero at light loads (losses absorbing the output). Their characteristic curves differ chiefly at maximum loads and at heavy overloads. Electrical machinery has clearly defined maximum loads depending upon temperature. A given overload can be carried only for a short time. Overloads do not reduce the efficiency much. The boiler is similar in maintaining efficiency, but is greatly superior in its ability to carry overloads. It has no definite time limit, but can be driven indefinitely by increasing the draft. Except under extreme conditions the boiler can carry maximum load indefinitely.

With economical operation steam engines and turbines of the constant speed type have only moderate maximum overload capacity. The efficiency under overload drops off more rapidly than that of a boiler. To obtain high overload capacity by admitting live steam to low pressure cylinders or stages leads to an abrupt drop of the efficiency, and even then there is a definite limit of capacity. The steam boiler, therefore, is almost unique in its advantageous performance.

Water Circulation

In many heat-transfer appliances the rate of transmission increases as the fluid velocities increase. On the reception side high fluid velocity leads to rapid replacement of warmed fluid by new and colder fluid; (on the emission side, cooled fluid is replaced by warmer fluid, if the heat-emitting fluid is other than a vapor) and hence to augmented temperature difference. In a steam boiler, however, the water temperatures at various points usually differ imperceptibly. The quantity of heat transferred can scarcely vary much with the water velocity, and the efficiency does not in any marked degree depend upon water circulation. The heat transfer which occurs by radiation, at surfaces directly exposed to the fire, does not in any marked degree depend upon water circulation, assuming that the circulation is sufficient to keep the surface wet. The heat transfer which occurs by radiation, at surfaces directly exposed to the fire, does not depend upon gas circulation.

Good circulation is important, however. It reduces stresses arising from differences of temperature, discourages the accumulation of scale or mud in pockets and (still more important) tends to prevent the formation of adhesive bubbles against the sheets. Such unwetted spots may cause local overheating. They are most apt to exist when boilers with insufficient liberating surface and poor circulation are driven hard.

Steadiness of Water Level

This implies a large water surface "disengaging" or "liberating" surface, in proportion to the volume of water; or perhaps more strictly, in proportion to the expected total evaporation. Priming may result from inadequate liberating surface and occurs, consequently, in many vertical boilers having the water level below the tops of the tubes. Drums should not be too small, else slight variations of water level may carry it rapidly below the danger line.

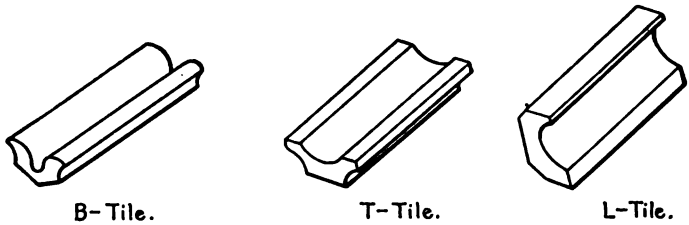

Fig. 7. Forms of Tile Used with Heine Boilers.

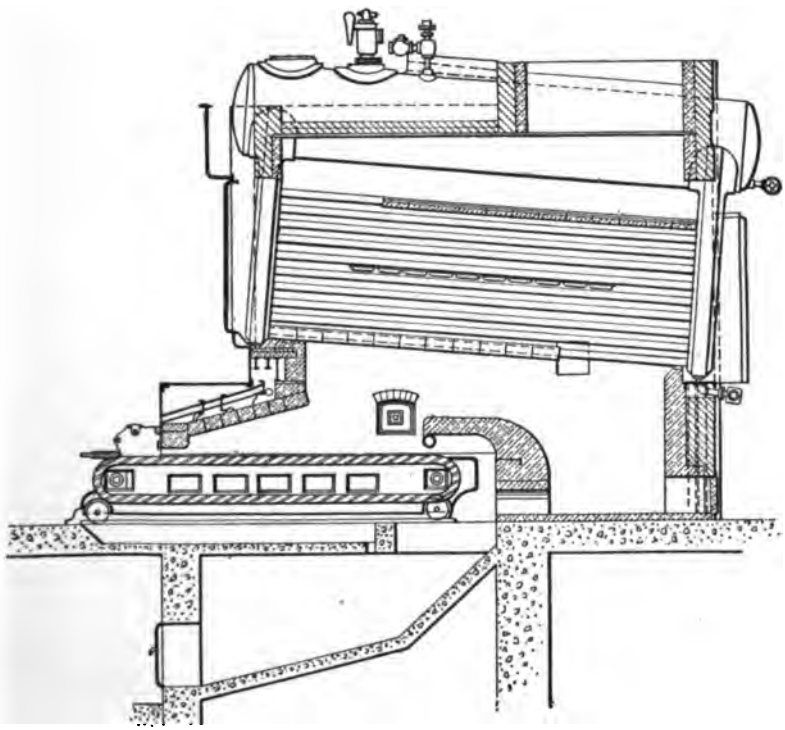

Fig. 8. Divided Pass Baffle in Heine Boiler.

Railway Exchange Building, St. Louis, Mo., operating 1052 H. P. of Heine Standard Boilers.

CHAPTER 3

SUPERHEATERS

SUPERHEATED steam is steam whose temperature is higher than that corresponding to saturated steam at the same pressure; steam which, when heat is removed, will not immediately begin the process of condensation. The properties of superheated steam approximate those of a perfect gas. Tables of these properties are given in Chapter 12 on STEAM.

Advantages of Superheating. These are important because superheating reduces pipe and cylinder condensation. In a well-designed attached superheater, the efficiency of the heating surface is at least as high as that of the boiler; and as the total heating surface is increased by that of the superheater the exit temperature of the gases will be decreased. This increases the overall efficiency of the boiler and superheater to a point which will, in general, make up for the increased heat required by the steam. With an independently fired superheater, more fuel will, of course, have to be burned.

The measure of the extra fuel for superheating is the difference in the total heat of the steam when saturated, and when superheated; this will depend upon the pressure and the superheat temperature, and also upon the temperature of the feed water. The following figures are based on a gage pressure of 165 pounds:

Amount of Superheat, Degrees	Extra fuel, per cent, required when feed water enters at		
	100°	150°	212°
50	2.73	2.85	3.03
100	5.13	5.38	5.70
150	7.40	7.74	8.21
200	9.61	10.05	10.66

The superheater does some of the work which the heating surface of the boiler would have to do if the same number of heat units were to be supplied in saturated steam, so that the boilers can be run at lower rating. The superheater may not increase the first cost of the boiler plant, for with the increased economy the number of units used may be decreased. The increased economy of the engines due to the use of superheated steam may naturally enable smaller condensers to be used, and may lessen the cost of pumping owing to less water being used. Superheated steam is used, almost without exception, in the largest and most economical plants.

The pipe radiating surface can be reduced by the use of smaller pipes, owing to the fact that higher velocities (as high as 12,000 ft. per min.) are permitted with superheated steam.

The theoretical gain is indicated in the temperature-entropy diagram, Fig. 9, in which areas represent heat quantities. The line (oa) starting at a temperature of 32 deg. is the liquid line and the area under (oa) represents the heat of the liquid, q, that is, the heat necessary to raise the temperature of one pound of water from 32 deg. to the temperature corresponding to

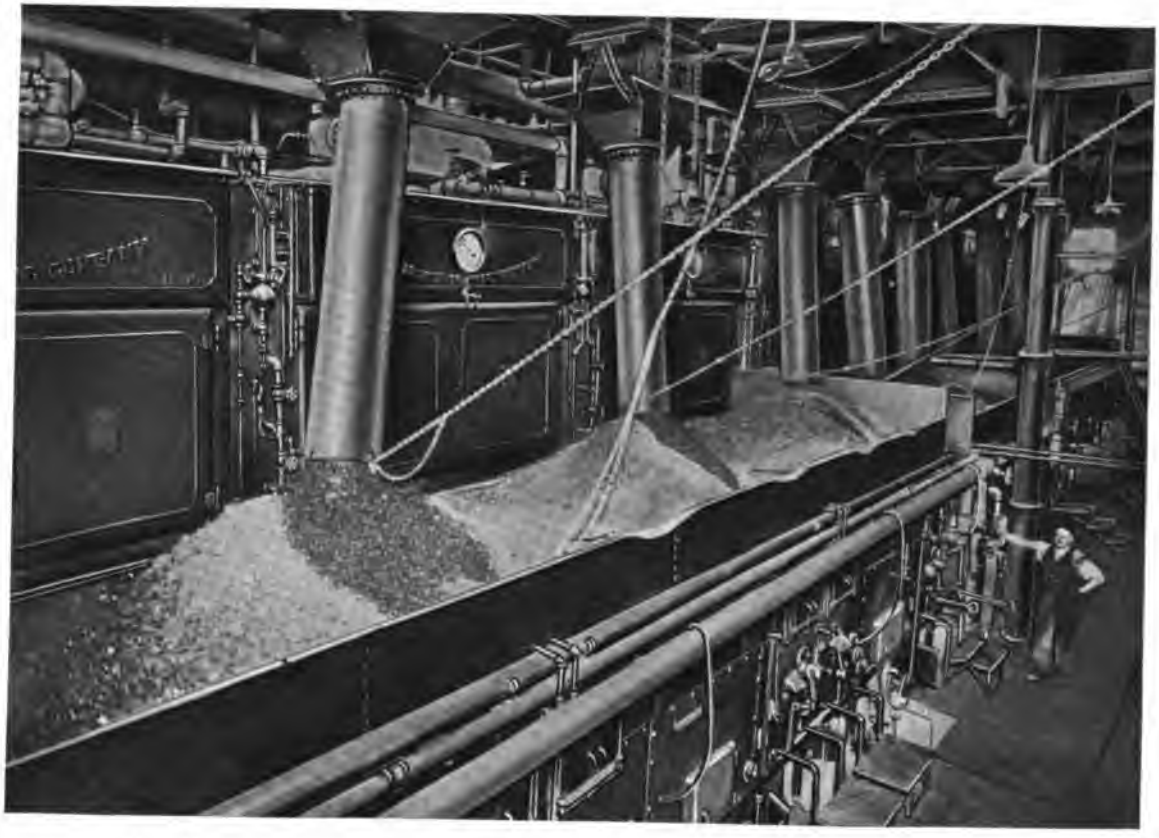

2300 H. P. Installation of Heine Standard Boilers set over Murphy Stokers in the Plant of The Ebling Brewing Co., New York, N. Y.

the pressure in the boiler where the vaporization takes place. The line (ab) represents this process of vaporization and the area under it is the heat, L, added during the process. At (b) the steam is in a dry-saturated condition: (bc) shows the superheating of the steam at constant pressure and the area below is the heat added during the process. The steep slope of the line (bc) shows that the point (c), which is the final condition of superheat, must be carried to a high temperature in order to have the area below

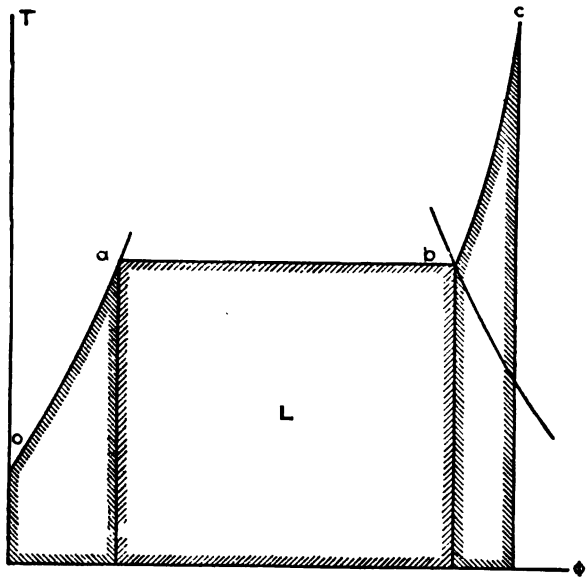

Fig. 9. Temperature—Entropy Diagram.

of any size. A high degree of superheat, which means a high temperature, will add only a small number of heat units to the dry-saturated steam.

For example, dry steam at 150 lb. abs. pressure has a heat content of 1195 B. t. u. per pound. If this steam is superheated 141.5 deg. to a temperature of 500 deg., the heat content will be 1274 B. t. u. or a gain of only 79 B. t. u. per pound for an increase in temperature of 141.5 deg.; or 6.6 per cent increase in heat for 39.5 per cent gain in temperature.

Effect on Reciprocating Engines. Steam, admitted to the cylinder of an engine, comes in contact with walls that have been cooled by contact with the low pressure steam exhausted during the previous stroke. Heat flows, therefore, from the steam to the cylinder walls, and if the steam is saturated part of it will be condensed; sometimes this will be as much as 20 or 30 per cent. The loss due to surface condensation is one of the most serious occurring in the reciprocating steam engine. If the steam entering the cylinder is superheated, then the flow of heat caused by contact with the colder cylinder walls will cause a decrease in the amount of superheat, but no condensation until the temperature has been reduced to that of saturated steam.

The many tests made on reciprocating engines using saturated and superheated steam have shown a smaller steam consumption for superheated steam. With moderate amounts of superheat, that is, up to 200 deg., the gains have been greater than for the higher temperatures. The extra invest-

ment and cost of maintenance neutralize the gain from the higher temperatures. The gain in steam economy due to superheat is most striking with small, simple engines, in which the cylinder condensation losses are the greatest.

Tests on Buckeye engines (simple 12 by 16 in., and compound 10 and 17½ by 16 in.) with steam at 100 to 110 lb. pressure, show about what can be expected in this way. Table 3 gives results of tests with superheats up to 200 deg.

Table 3. Pounds of Steam Per H. P. Per Hour for Different Superheats.

Engine	Rated load, Percent	Superheat temperature, degrees				
		0	50	100	150	200
Simple, non-condensing	30	35.0	28.0	24.0	21.5	19.5
Simple, non-condensing.....	50	31.5	25.5	22.0	19.0	17.5
Simple, non-condensing.....	100	28.5	24.0	20.0	18.0	17.5
Compound, non-condensing....	100	.....	.....	17.5	15.5	14.6
Compound, condensing.....	100	18.0	16.5	14.0	12.5	11.5

G. F. Gebhardt states that a fair estimate of the average percentage reduction in steam consumption per horsepower hour with moderate superheating, that is from 100 to 125 deg., based on continuous operation of existing plants, is:

1. Slow running, full stroke or throttling engines, including direct-acting pumps.....40
2. Simple engines, non-condensing, with medium piston speed, including compound, direct-acting pumps.....20
3. Compound condensing Corliss engines.....10
4. Triple expansion engines..... 6

European builders guarantee steam consumption (in lb. per I.H.P. per hr.) with highly superheated steam (total temperatures 750 to 850 deg.) as follows:

Single cylinder condensing engines (uniflow)..... 8.5
Single cylinder non-condensing engines (uniflow).....12.0
Compound condensing engines (locomobile)..... 8.0
Compound non-condensing engines (locomobile).....10.5

W. E. Dalby gives results on a small engine using superheated steam, taking the data from tests by Professor Ripper. Table 4 shows the difference in the increase of the efficiency of theoretical and actual engines, both working under the same conditions:

The steam is dry-saturated in the first case. The theoretical efficiency increases from 14.2 to 15.9 per cent, or 11.6 per cent, while the actual efficiency gains 65.0 per cent, the increase being from 6.3 to 10.4 per cent. This shows, of course, that the superheat acts to decrease the losses in the actual engine.

In comparing the performances of different engines, the heat consumption, rather than the steam consumption, should be used. The number of heat units required to develop one indicated horsepower in the actual engine takes into consideration the pressure, superheat and the steam consumption The avoidance of cylinder condensation by the use of superheat will affect both heat and steam consumption. So whatever the basis of comparison, the employment of superheated steam is an advantage.

Table 4. Effect of Superheat on Actual and Theoretical Engines.

I. H. P.	Steam pressure, Lb./Sq. In.	Superheat Degrees	Steam Lb./I. H.P./hr.	Thermal efficiency, per cent	
				Act. eng.	Theor. eng.
13.33	101.7	0.0	39.62	6.3	14.2
13.33	98.5	98.3	33.80	7.1	14.6
13.47	98.6	254.2	23.36	9.5	15.2
13.49	99.5	319.6	20.08	10.4	15.9

Effect on Steam Turbines. The theoretical gain from the use of superheated steam is the same in steam turbines and in reciprocating engines; in either the available number of heat units are increased by the use of the superheating process. The actual gain, however, is less in the turbine than in the engine, for the action of the steam in the former is continuous while in the latter it is intermittent. Superheated steam is of little value in correcting surface condensation, because practically none occurs in the turbine.

The water rate of the turbine is decreased by the superheating of the steam but to a less extent than in the reciprocating engine. Superheating is of importance in that erosion of the turbine blades caused by the presence of water in the saturated steam is almost entirely done away with.

The effect of expansion on saturated steam is to increase its moisture content, so that even if the steam were dry at entrance, moisture would be present in the low pressure stages. If the steam is sufficiently superheated the heat reduction due to the expansion will not lower the temperature to that of saturated steam, which must be reached before condensation begins. Any moisture present in saturated steam has the effect of reducing the economy.

The steam consumption of certain large turbines using superheated steam is decreased about 1 per cent for every 8 to 12 deg. of superheat up to 200 deg.; the variation being from about 1% for 12 deg. at 50 deg. superheat to 8 deg. at 200 deg. superheat. In the same boiler plant the minimum saving in coal due to superheating is 4 to 5 per cent. This coal saving depends upon (1) the saving of steam resulting from the economy of the prime mover; and (2) the amount of coal necessary to obtain the superheat.

Limit of Superheat. As far as material goes power plant apparatus might be designed to withstand temperatures of 800 or even 1000 deg. Other considerations, however, limit the amount of superheat, so that the most economical degree is determined by the operating conditions.

In this country steam temperatures in power plants are seldom more than 600 deg.; the superheat is from 200 to 250 deg., depending upon the boiler pressure. In Europe, however, where superheaters are almost invariably employed, 600 deg. is a common temperature and 400 deg. superheat, which would be a temperature of about 850 deg., is sometimes used.

With these very high temperatures the first cost and maintenance are high, and the thermal gain is considerable. This would be advantageous when materials and labor costs are reasonable and fuel costs high. Such conditions were formerly found in Europe. In this country, however, labor and materials are expensive while fuel has been cheap. It is more economical, therefore, to use moderate degrees of superheat, even at the sacrifice of some gain in heat; but as the cost of fuel increases, the tendency will be towards increased superheat.

The engine design also determines to some extent the temperature to be used. The Corliss and slide-valve types of engines seem to reach their limit

A part of the 6300 H. P. Heine Boiler Installation at the Chino Copper Company, Hurley, New Mexico, in course of Erection.

at about 500 deg. Higher temperatures cause warping of the valves and interfere with lubrication.

Very highly superheated steam, at temperatures of 600 deg. or more, is used in poppet-valve engines, since such valves do not warp and require no lubrication. Balanced piston and specially designed Corliss valves are also successful with high superheats.

Steam-turbine construction and operation permit the use of steam temperatures as high as 800 deg. Nevertheless for reasons of economy of maintenance, even the latest designed turbine plants are working with steam at temperatures not over 650 deg.

Control of Superheat. Superheat temperatures may vary widely with the temperature of furnace, volume of air used, and rate of firing coal. Extreme variations should be avoided, as they may cause serious difficulties with the piping, valves and gaskets. Stoker firing and automatic feed and damper regulation will do much toward eliminating superheat fluctuations.

Any variation in the boiler load will affect to a marked degree the temperature in superheaters placed inside the boiler setting, in the path of the hot gases. The truth of this last statement is shown by Fig. 10, and by the following quotation from "Superheater Logic," by the Heine Safety Boiler Company:

"If the increase in load is sudden and there is a large momentary draft of steam with accompanying fall in boiler pressure, the superheat temperature will fall because the rate of combustion is not increased. Conversely if a boiler is steaming at a heavy load and the load decreases suddenly, then the superheat, which is already very high due to the heavy load, will be further increased because of the smaller flow of steam through the tubes. In this way very excessive superheats are obtained from an equipment designed for only a moderate superheat at normal load.

"Evidently the greatest economy is secured when a plant is designed and built for a certain fixed superheat and this temperature is maintained constant."

Types of Superheaters. In general use are (1) the separately-fired, and (2) the attached type of superheater. The former is placed in its own setting and has a furnace of its own to supply heat; the latter is located within the setting of the boiler and receives heat from the hot gases as they pass on toward the stack. Both types receive steam containing perhaps 2 per cent moisture from the boiler and increase its temperature by the addition of heat without changing the pressure. The steam elements are practically the same in both types—a number of tubes or pipes arranged to contain a relatively small volume but to expose a large surface to the heat.

The final temperature of steam in a superheater depends upon the temperature, volume and quality of the steam entering it, and upon the volume and temperature of the hot gases coming in contact with the tubes. The temperature and quality of the steam can be considered as constant while the load on the boiler determines the quantity of steam. Therefore the amount of superheat will be principally affected by the temperature and volume of the hot gases. If it is desired to maintain a constant degree of superheat, the flow of hot gases over the tubes must be controlled.

Separately-fired superheaters are intended to give higher temperatures to the steam than can be obtained from attached superheaters. The superheating coil is suspended over the furnace, protected from the direct heat of the furnace. Baffles are provided so that the hot gases make two or more passes around the tubes. Steam enters at the top and leaves at the bottom. The tube surface is increased by putting on cast iron rings outside the tubes.

A flow of steam through the superheater must be provided to prevent burning, should the load be suddenly thrown off the boiler. All superheaters should be equipped therefore with independent safety valves of the

outside spring type, set at a slightly lower pressure than the boiler safety valves. There should be a drain for getting rid of any collected water before starting. The superheater should be so proportioned that the same quantity of steam will pass through all of the tubes in order that none of these can be by-passed, and consequently in danger of burning.

Superheaters must be protected from exposure to hot gases with no steam flowing, as when firing up, cooling down or standing idle. With separately-fired superheaters the hot gases can be deflected so as to by-pass the superheating coil and flow directly from the furnace to the stack; or an outer cast iron covering with flanges may be provided to protect the steel tubes and store the heat. Also the superheater should be filled with water, or flooded whenever the flow of steam ceases. Flooding is objectionable in that scale-forming material can be deposited in the tubes, which cannot be cleaned.

Any of the above methods may be applied to attached superheaters. When these are flooded they generally are connected in parallel with the boiler heating or evaporating surface, so that they can be drained and connected in series with the boiler when superheat is desired.

The attached or indirectly-fired superheater may be placed (1) at the rear of the furnace; (2) at the end of the heating surface just before the gases leave the boiler setting; and (3) at some intermediate point.

The steam passing through the superheater will absorb heat, depending upon the temperature difference between the gases and the steam, and upon the amount of superheating surface. Therefore to obtain the same degree of superheat the amount of surface required in the furnace where the gases are hottest may be small as compared with the amount required when the superheater is placed at the end of the heating surface, where the gases are cooler. The usual location of the superheater in the boiler setting is such that the temperature of the hot gases reaching it seldom exceeds 1500 deg. In this position the attached superheater is subjected to the fluctuating temperatures of the hot gases. The amount of superheat will vary, therefore, with the load on the boiler and will increase as the boiler is forced.

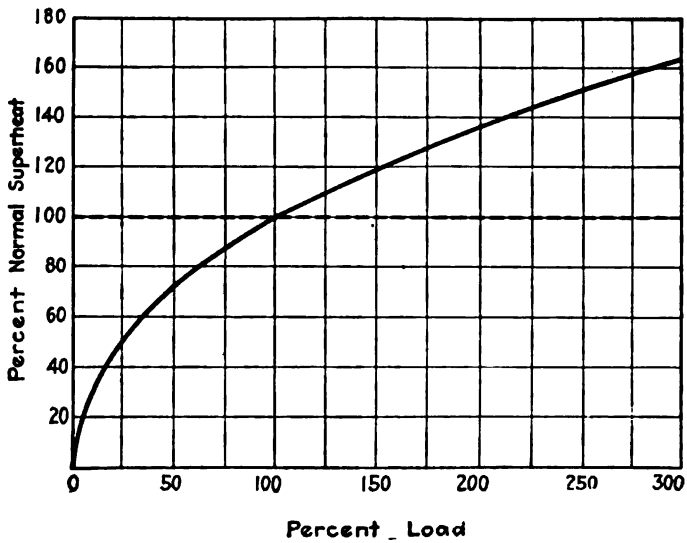

Fig. 10. Effect of Load on Superheat with the Superheater in the Path of All the Boiler Gases.

The more positive method of maintaining a constant superheat is by locating elements in a separate chamber, where a damper can be used to regulate the flow of gases, automatically if desired. The superheater can then be by-passed altogether in an emergency.

Figs. 11 and 12 illustrate the details and location of the Heine superheater. This consists of two parts, the superheater box and the tubes. Into this box are expanded the steel tubes arranged in four passes as shown. Two interior partitions separate the superheater box into three chambers. The steam enters at the bottom, passes through the lower tubes, returns to the central chamber through the second pass tubes and then flows through the third and fourth passes, returning to the upper chamber.

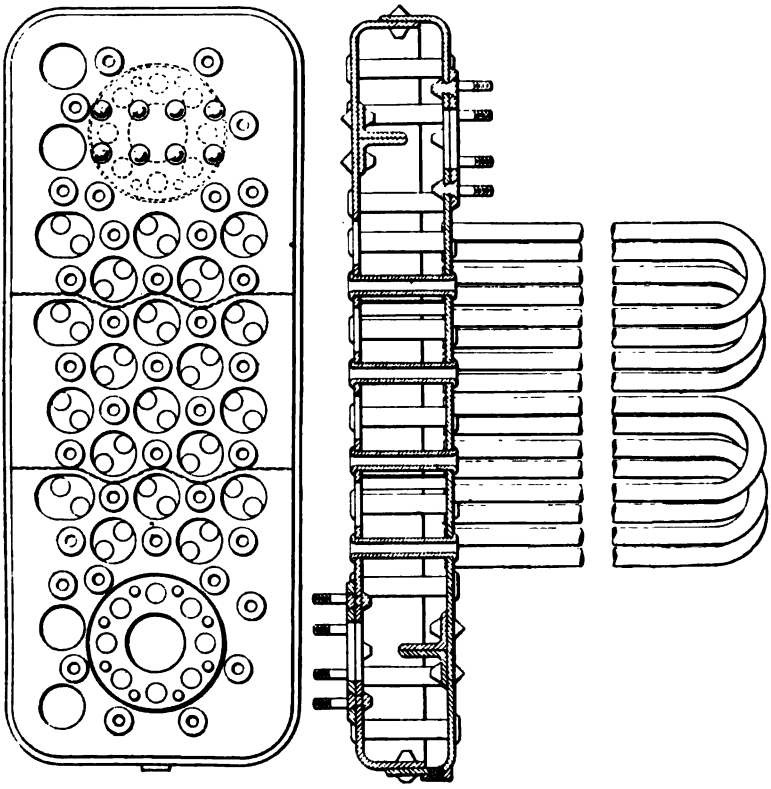

Fig. 11. Details of Heine Superheater

The location of the superheater is shown in Fig. 12. It can be installed on one or both sides of the boiler, according to the boiler size, and the superheat desired. The entire superheater is encased in brick work with a firebrick roof supported by special T-bars. This superheater chamber communicates with the furnace by a flue formed in the side wall, through which a small part of the furnace gas rises. This gas enters the rear of the chamber, makes two passes over the tubes and leaves at the front of the setting, passing over the surface of the boiler drum. A damper in the chamber outlet controls the flow of hot gas and is regulated from the front of the boiler, either by hand or by an automatic temperature control.

Obviously, the temperature of the superheated steam can be changed as desired by simply manipulating the damper in the outlet of the superheater chamber, and the superheat can be maintained constant, regardless of the boiler load, the rate of combustion, the amount of air used for combustion, the furnace temperature, the opening of furnace doors or any other variable, such as the amount of soot on boiler and superheater surface.

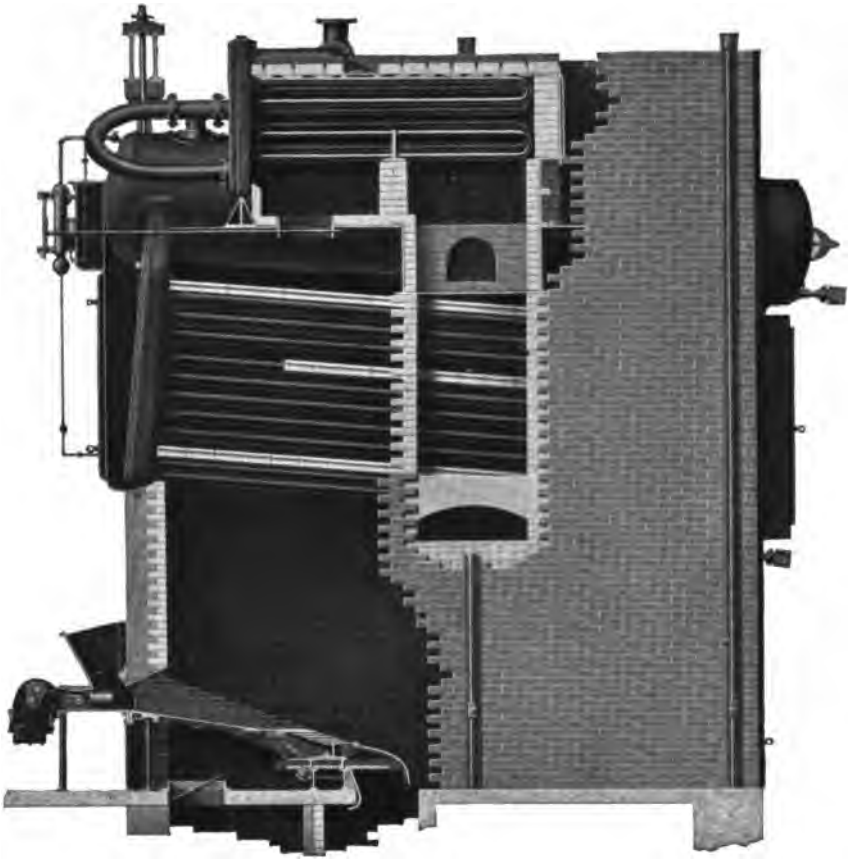

Fig. 12. The Heine Superheater.

For automatic regulation of the superheat temperature, a complete regulator is installed as shown in Fig. 13. This regulator is quick acting and responds to small variations in steam temperature, as will be evident from its construction.

The entire device consists of two main parts, the controller and the diaphragm-motor. The controller comprises a thermostat which controls a small supply of compressed air in accordance with the temperature of the superheated steam. The air is admitted to or released from the diaphragm-motor, connected by a link to the superheater damper handle.

Provision for soot blowing is described on pages 31 and 41.

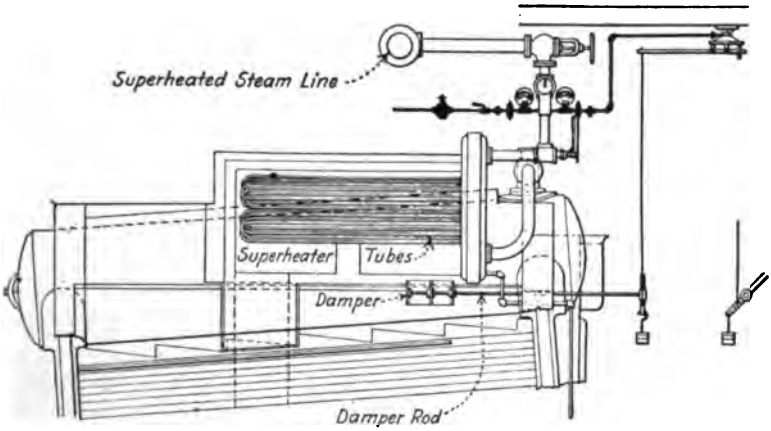

Fig. 13. Arrangement of Automatic Temperature Regulator with Heine Superheater.

The requirements of a successful superheater, as given by *Gebhardt,* are:

1. Security of operation or minimum danger of overheating.
2. Economical use of heat applied.
3. Provision for free expansion.
4. Disposition so that it may be cut out without interfering with the operation of the plant.
5. Provision for keeping the tubes free from soot and scale.

Superheating Surface. The surface required is dependent upon the amount of heat to be transferred to the steam, and upon the rate of heat transfer per unit of surface. The operation is conveniently divided into three stages:

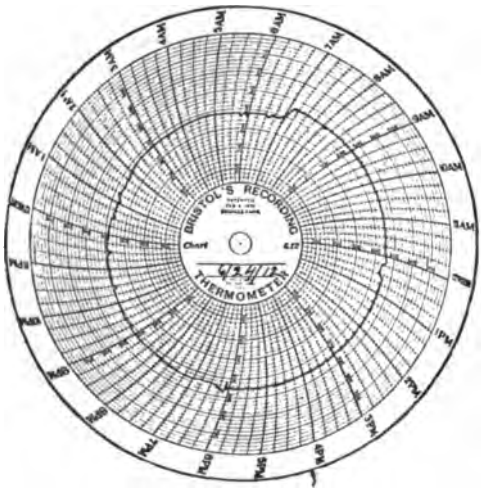

Fig. 14. Superheat Chart from a Boiler Equipped with a Heine Superheater and Automatic Superheat Controller.

North Side High School, Denver, Colo., equipped with Heine Standard Boilers.

1. Heat given up by the gases.
2. Heat transmitted through the metal walls of the elements.
3. Heat absorbed by the steam.

The amount of heat involved in each of these stages is the same except for loss by radiation.

The heat given up by the gases is:

$$Wc\ (t_1 - t_2) \tag{4}$$

the heat transferred is:

$$SRd \tag{5}$$

and the heat absorbed by the steam is:

$$Wc_1\ (t_3 - t_4) \tag{6}$$

where:

S=Superheating surface, sq. ft. per B.H.P.

R=B.t.u. transferred per hour per sq. ft. of superheating surface per deg. F difference between the mean temperatures of the gases and of the steam, and approximates:

1 to 3 for superheaters located at the end of the boiler heating surface,

3 to 5 when located between the first and second passes,

8 to 12 for separately fired superheaters and for superheaters located immediately over the furnace in stationary boilers or in the smoke box of locomotive boilers.

d=difference between the mean temperatures of the gases and steam.

W=weight of gases passing through the superheater, lbs. per B.H.P. per hour.

w=weight of steam passing through the superheater, lbs. per B.H.P. per hour.

c=mean specific heat of the gases.

c_1=mean specific heat of superheated steam.

t_1=Temperature of gases entering superheater, deg. F.

t_2=Temperature of gases leaving superheater, deg. F.

t_3=Temperature of superheated steam, deg. F.

t_4=Temperature of saturated steam, deg. F.

Neglecting radiation, (1) is equal to (2); and neglecting the moisture in the incoming steam, (2) is equal to (3), therefore:

$$S=\frac{Wc\ (t_1 - t_2)}{R\ d} \tag{7}$$

and:

$$S=\frac{Wc_1\ (t_3 - t_4)}{R\ d} \tag{8}$$

Instead of (3), the following may be preferred:

$$w\ (H_1 - H_2) \tag{9}$$

where:

H_1=Total heat of superheated steam above 32 deg. F.

H_2=Total heat of saturated steam above 32 deg. F., which may be easily corrected to allow for evaporating the moisture present.

Instead of basing R on the difference in the temperatures of the gases and of the steam, it is more correct to divide the heat transfer into two stages—gas to metal and metal to steam. As this necessitates a knowledge of the metal temperatures it is generally confined to laboratory research. The precise value of R is dependent upon so many variable conditions, such as the velocity of the gases and of the steam, the condition of the surfaces as to soot and scale, the arrangement of the superheater tubes and the temperature differences involved, that refinements are out of place. The

New York Central Railroad Terminal, New York City, equipped with 8550 H. P. of Heine Standard Boilers and Heine Superheaters.

amount of surface is usually determined empirically on formulae derived from the results obtained in a large number of cases of the same general design, operating under similar conditions. This leaves the result in considerable doubt where the whole of the gases flow over the superheater with no possible control. With only a part of the gases flowing over the superheater under perfect control, the amount of surface can be simply related to the boiler heating surface, according to the degree of superheat required, and the resulting steam temperature will be kept constant within ± 5 deg. F., as shown in Fig. 14.

Superheater Materials. Heine superheaters are built of wrought steel, insuring ease of construction and durability.

Superheater Piping and Fittings. Cast iron has been used for valves and fittings. Up to 600 deg., it is safe if the temperature is maintained constant. Under higher or fluctuating temperatures permanent increase in dimensions and numerous failures have resulted. Cast iron failures are undoubtedly due more to fluctuations in temperature than to constant high temperatures when it develops cracks and distortions.

The advantage of cast steel for superheater material is that it is not damaged at high temperatures. This decreases the importance of protection and simplifies the installation. The construction, however, must be heavy and thick-walled.

The strength of superheater materials drops off rapidly for temperatures above 600 deg., as shown by Gebhardt and others. Because of this rapid decrease in tensile strength, steam is seldom superheated to temperatures above 850 deg.

Piping for superheated steam is usually made of mild steel. With the greater number of heat units in superheated steam, the pipe capacity is increased and relative conduction losses and leakage are reduced. Under superheated conditions much higher steam velocities can be used, 12,000 ft. per min. not being uncommon and 16,000 ft. per min. having been used. This, of course, increases the pipe line capacity. With the high temperatures resulting from superheat the problem of expansion must be carefully considered, especially when temperatures are likely to fluctuate widely. See chapter on piping.

Industrial Uses. Superheated steam is used elsewhere than in engines and turbines. A Chicago gas company blows its water gas generators with superheated exhaust steam at about 2.5 lb. pressure, instead of using live steam. This results in a 20 per cent saving of boiler fuel. The capacity of the generators is increased because of the lengthening of the making period. The superheated steam relieves the generator of the work of re-evaporating the water, which is always present when saturated steam is used.

Superheated steam is successfully used for process work, where both the latent heat and the heat of the superheat of the steam can be used, as for example, when the steam can be blown directly into the substance to be heated. When, however, only the heat of the superheat can be employed, the use of superheated steam does not pay. ~~Its specific heat is only about one-half that of saturated steam and therefore, about twice as much superheated steam would be required.~~ Superheated steam may be justified when the heat of the superheat can be used in one operation and the latent heat or part of it in a connecting operation. The saturated steam left after the first operation must then contain enough heat for the second operation.

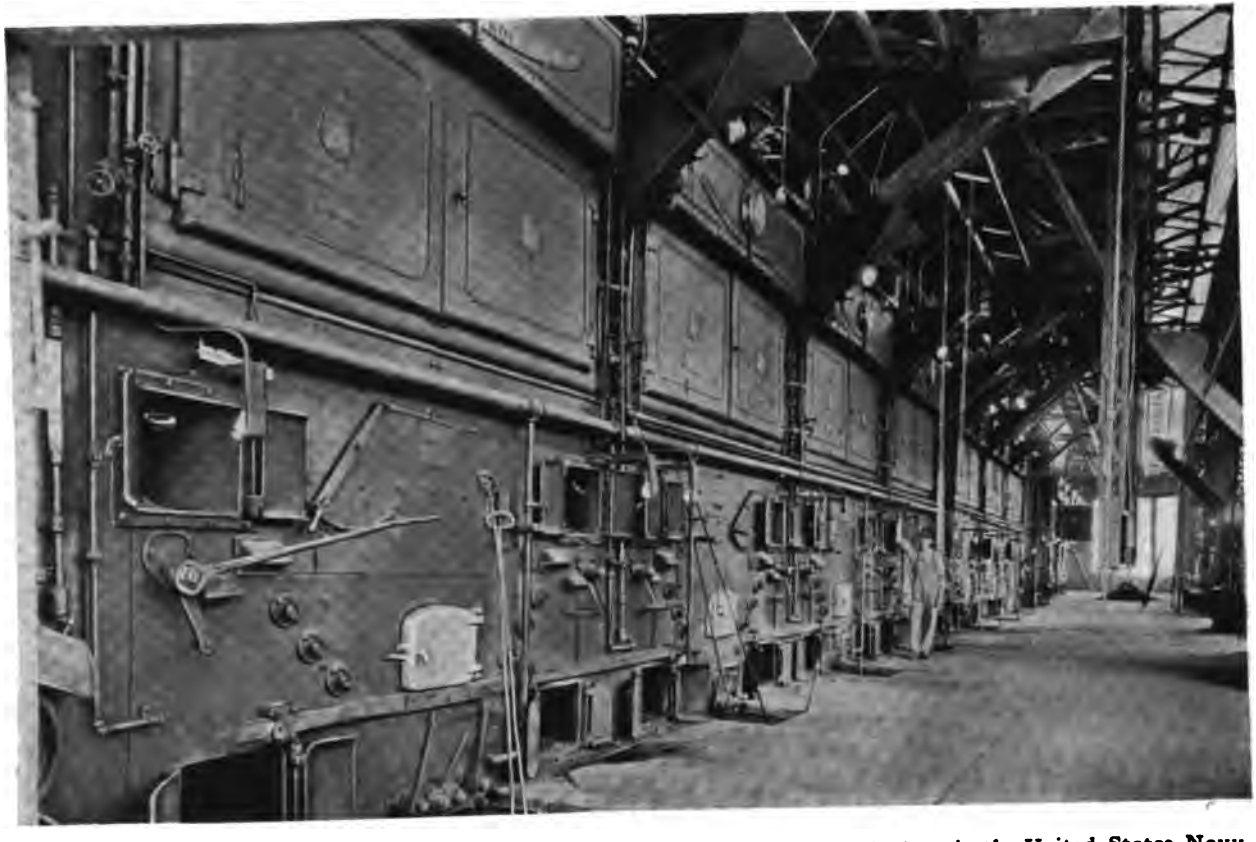

Part of 1600 H. P. Installation of Heine Standard Boilers set over Murphy Stokers in the United States Navy Yard, Norfolk, Va. 1500 Additional H. P. of Heine Standard Boilers are Installed in the Naval Hospital in this Yard.

CHAPTER 4

FURNACES AND SETTINGS

PROPER furnace design and adequate proportions are the essentials in securing high boiler efficiency. A single design of setting cannot be standardized to meet the various fuel, operation and space requirements. To obtain complete combustion, special designs are required for low and high volatile coals, gas, fuel oil, waste heat, and for hand or stoker firing.

Furnace Design

THE main problem in furnace design is to determine the volume of the furnace and the length of the flame travel. Furnaces with a small combustion space, in which the flame travel must be short, are not suited for the burning of high volatile coals at high rates of combustion. For reasonably complete combustion, the combustion chamber must be large enough to permit thorough *mixing* of the air and gases; sufficient *time* for combustion; and to maintain *temperature* sufficiently high to secure combustion.

Mixing. To secure efficient combustion, the volatile distilled from coal, which in part is composed of tar vapor, gases and small solid particles of floating carbon, must be intimately mixed with an adequate supply of air. Fuel oil and gas must also be mixed thoroughly with air. If the right mixture is not maintained, the result is stratification, such as is common in hand-fired furnaces not operated properly. In stoker-fired installations the fuel is more evenly distributed over the grate. This prevents the inrush of large quantities of air in spots and the choking of air in other parts; the products of combustion are, therefore, mixed more uniformly with oxygen-bearing air.

Additional air is sometimes supplied above the fuel bed to obtain thorough burning. Arches, piers, wing walls and steam jets are sometimes added in hand-fired furnaces to give a thorough mixture of air and gas so that the higher volatile coals can be burned without smoke. The locations of these parts depend upon the kind of coal and the manner in which the boiler is to be operated. Such structures increase the draft loss through the boiler, so that the steaming capacity for a given draft is reduced. Generally, however, they improve combustion.

Time. This is next in importance to the mixing requirement. The time available for combustion (before the gases are cooled by the boiler heating surface) depends upon the length of gas travel, or for the same grate area, upon the cubical contents of the furnace. The combustion space must be correctly related to the rate of combustion for a given fuel, otherwise economy will be sacrificed.

Experiments by the *Bureau of Mines* with a Heine Boiler indicate the relation between boiler economy and furnace volume, as in Fig. 15. In these, semi-bituminous coal was burned on a Murphy stoker having a projected grate area of 25 square feet. Pocahontas steaming coal was consumed at the rate of 65.4 lb. per sq. ft. of grate per hour. When the products of combustion had passed through 80 cu. ft. of combustion space, the gases contained fully 3.7 per cent of unconsumed combustible, but as the space traversed increased to 160 cu. ft. the combustible decreased to 1 per cent. When a point corresponding to 260 cu. ft. of the furnace volume had been passed less than 0.5 per cent of combustible remained in the gases. This indicates that the larger the combustion space, the more nearly complete is combustion.

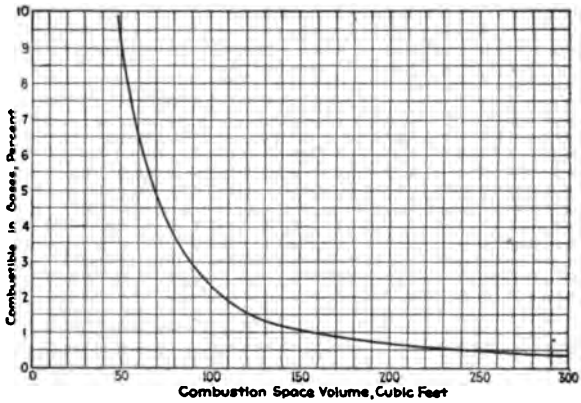

Fig. 15. Relation between Furnace Volume and Completeness of Combustion.

Temperature. The combustible gases in a boiler furnace must be kept at a temperature sufficiently high to permit complete combustion, economically and without smoke. The ignition temperature of hydrocarbon gases is between 1000 and 1500 degrees. However, this temperature varies with the amount of air, kind of fuel, and the quantity of neutral gases present.

A high furnace temperature generally means rapid combustion and good efficiency. It is the result of higher CO_2 and the absence of CO, so that the gases are more nearly burnt while traversing the furnace. The variation of furnace temperature and boiler load is shown in Fig. 16, which represents tests by the *U. S. Geological Survey* on a Heine boiler and underfeed stoker.

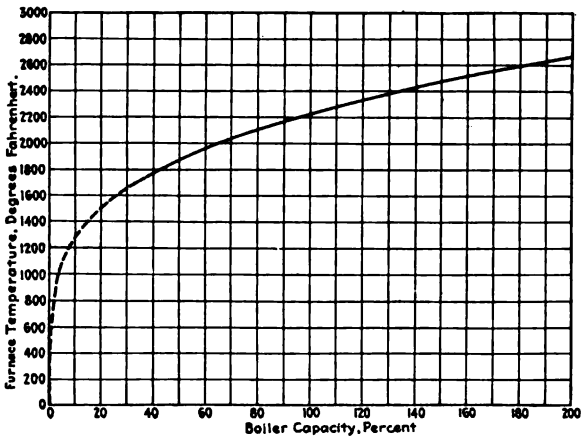

Fig. 16. Relation Between Boiler Capacity and Temperature of Combustion Chamber.

The effect of temperature is also shown by tests of the *University of Illinois* on a Heine boiler equipped with a Green chain grate, Fig. 17. An economizer and a large induced draft fan were used, so that the rates of combustion were high. Coals having a combustible volatile content of from 30 to 40 per cent were successfully burned. Fire clay tiles are placed on the boiler tubes directly over the fire, forming the roof of the furnace and preventing the hot gases, which are still not fully mixed, from coming in contact with the cooler tubes.

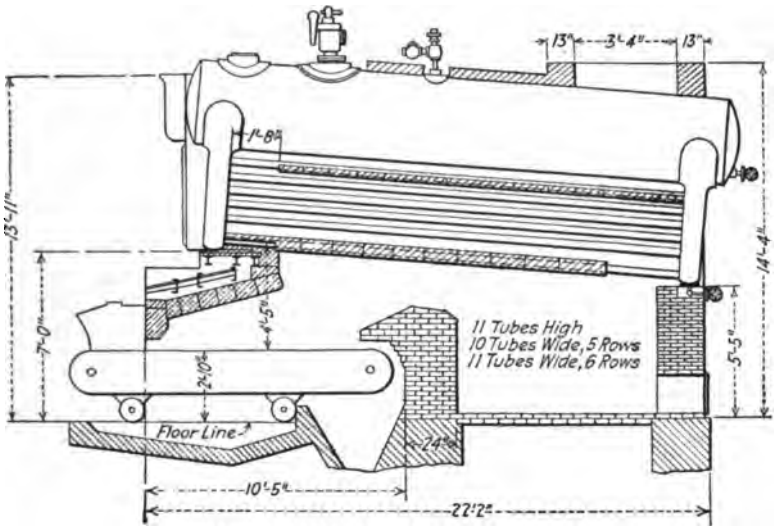

Fig. 17. Heine Boiler Tested for Smokelessness.

Tests were conducted on this boiler with *C*-tile on the bottom row of tubes, and then with *T*-tile. The *C*-tile encircle the tubes completely and present to the furnace a roof of solid firebrick. The *T*-tile rest upon the top of the tubes only, and therefore present to the furnace a roof of part brick and part water tubes.

With *T*-tile, the smoke record varied from 9 to 17 per cent, which corresponds to Nos. ½ and 1 on the Ringelmann scale, respectively. The *C*-tile record showed zero smoke. The temperature of the gases entering the nest of tubes from the combustion chamber averaged 1384 deg. in the first test, and 1678 deg. in the second test. The corresponding temperatures over the bridge wall were about 1850 and 2150 degrees.

Over 100 trials were made at loads varying from 60 to 150 per cent of rated boiler capacity, and from these *L. P. Breckenridge* concluded that it is almost impossible to make smoke with this setting under any condition and that it operates with economy.

Furnace Volume. The *Bureau of Mines* shows that the furnace size is influenced mainly by the percentage of excess air, the rate of combustion and the kind of coal.

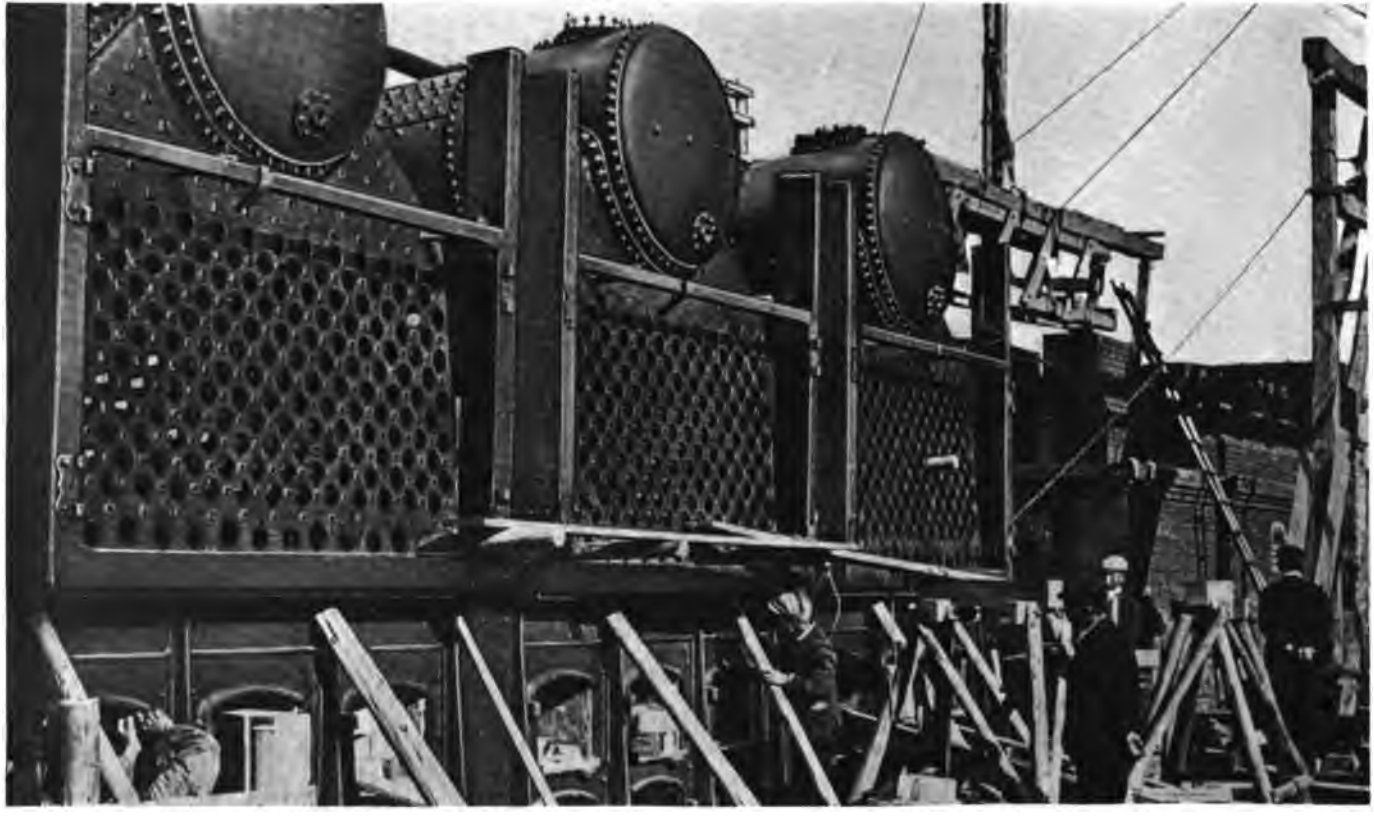

Erecting Three 326 H. P. Heine Standard Boilers in the Plant of the Yokkaichi Electric Light Co., Yokkaichi, Japan.

A Heine boiler and a special Murphy side-feed stoker furnace were used in the tests. Table 5 gives the composition of the three grades of coal —Pocahontas, Pittsburgh and Illinois—burnt in these tests. The results, Fig. 18, represent a supply of 50 per cent excess air for two rates of combustion of the different coals, and give the combustion space necessary per square foot of grate area for various combustion conditions, which are expressed in terms of the ratio of undeveloped heat to the total heat in the coal. These figures can be used as a guide in proportioning almost any style of furnace.

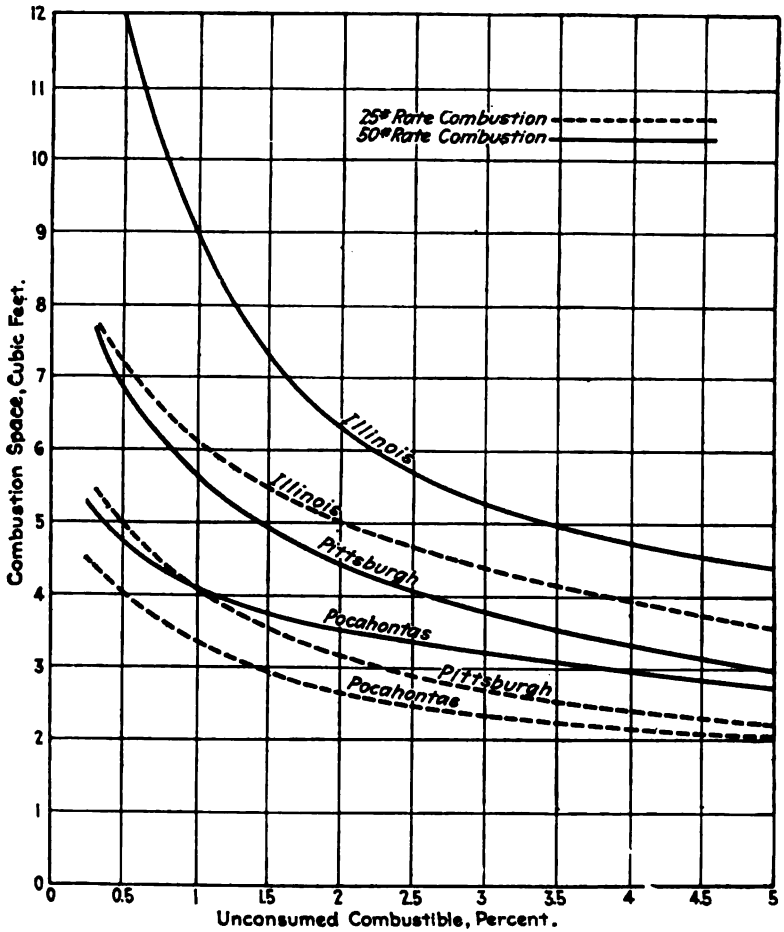

Fig. 18. Combustion Space Required per Square Foot of Grate Surface. Based on 50 Percent Excess Air for Coals Tested.

Table 5. Analysis of Coals Used in the Tests.

Constituent	Pocahontas Coal	Pittsburgh Coal	Illinois Coal
PROXIMATE ANALYSIS OF COAL AS RECEIVED			
Moisture.....per cent	2.21	2.51	16.16
Volatile matter.....per cent	15.78	30.28	34.09
Fixed carbon.....per cent	71.65	56.82	39.19
Ash.....per cent	10.36	10.39	10.56
	100.00	100.00	100.00
ULTIMATE ANALYSIS OF DRY COAL			
Hydrogen.....per cent	3.92	4.82	4.66
Carbon.....per cent	80.90	76.57	69.63
Nitrogen.....per cent	1.06	1.55	1.49
Oxygen.....per cent	2.97	4.99	9.55
Sulphur.....per cent	.56	1.41	2.08
Ash.....per cent	10.59	10.66	12.59
	100.00	100.00	100.00
Calorific value per pound, as received.....B. t. u.	13,762	13,365	10,433

A long narrow combustion space is to be favored rather than a short wide one of the same cubical contents. For conditions other than Murphy type furnaces the secondary air supply should be thoroughly mixed with the gases arising from the fuel-bed. The secondary air should always be admitted near and over the fuel-bed, at high velocity, and in a large number of streams.

A variation of 50 to 100 per cent in the excess of air makes no appreciable difference in the efficiency of the small furnace. In a furnace of large size, however, a small variation in the excess air will affect the operating efficiency, so that close control of the air supply becomes necessary

The minimum percentage of unconsumed combustible in the products of combustion is much larger in a furnace having a small combustion space than in a furnace having a large combustion space. The efficiency obtained with the large combustion space is therefore much higher. For boilers operated at heavy overloads, a large furnace volume is particularly essential.

Efficient combustion is secured when the furnace volume permits ample time, adequate mixing and sufficient temperature for thorough burning of the gases. The boiler settings should be high and the baffles placed horizontally on the tubes. The horizontal baffling promotes the mixing of stratified layers of the gases, and gives the gases time to burn completely before the tubes cool them below the temperature of ignition.

Head Room for Coal Burning Boilers. A definite height of boiler setting is required for complete fuel combustion. Investigations by *O. Monnett* on settings for the smokeless combustion of soft coal are summarized in Table 6, applying to water-tube boilers under average operation.

Table 6. Headroom Requirements for Smokeless Settings

Furnaces	Horizontal Return Tubular				Water Tube				Continental or Scotch Marine
	54	60	66	72	Hor. Baff. 1–1½" Pitch	Vert. Baff. 1–1½" Pitch	Hor. Baff. 3½" Pitch	Vert. Baff. 3½" Pitch	
(All Dimensions in Inches)									
	Shell to dead plate Front header to floor								
Hand Fired: No. 6	32	34	34	36	72	*	78	*	**
Hand Fired: No. 7	36	40	40	42	†	†	†	†	**
Hand Fired: No. 8	32	34	34	36	72	*	78	*	**
	Shell to floor								
Hand: Down draft	60	60	60	60	72	*	78	*	*
Hand: McMillan	52	54	60	60	72	*	78	*	**
Hand: Twin fire	58	60	62	64	72	*	78	*	*
Hand: Semi. ext. refuse burning	††	††	††	††	84	*	90	*	*
Gravity Feed: Burke	48	48	50	54	60	*	66	*	Full extension
Gravity Feed: McMillan	48	48	50	54	60	*	66	*	Full extension
Front Feed: Chain grate	72	72	78	78	84	114	96	120	**
Front Feed: Moore	48	54	60	60	72	102	78	108	**
Front Feed: Roney	60	60	60	72	84	108	90	120	**
Front Feed: 20th Cent	54	60	66	72	84	108	90	120	**
Side Feed‡: Detroit	66	72	78	84	90	*	96	*	Full extension
Side Feed‡: Model	66	72	78	84	90	*	96	*	Full extension
Side Feed‡: McKenzie	66	70	70	70	90	*	96	*	Full extension
Side Feed‡: Murphy	66	72	78	84	90	*	96	*	Full extension
	Shell to Dead Plate								
Under Feed: American	42	42	42	42	78	96	84	102	**
Under Feed: Jones	36	38	40	42	78	96	84	102	Min. diam. of furnace 36 in.
Under Feed: Taylor	**	**	**	**	84	102	90	108	**
Westinghouse	**	**	**	**	84	102	90	108	**

* Combinations not recommended as smokeless settings.

** Combinations not ordinarily met with in practice.

† Not adapted to water-tube boilers.

†† Applied only to water-tube boilers. No. 8 better for H. R. T. boilers.

‡ Exceptionally wide settings will need more head room to take care of extra spring of arch.

Classification of Settings

IN the burning of fuels economy is represented by completeness of combustion and smokelessness. As this depends upon the style of setting, air supply and method of feeding coal, it is used by *H. Kreisinger* as a basis for classifying furnaces, as shown in Fig. 19. At (A) is a hand-fired furnace into which the coal is fed intermittently on the top of the fire. The air

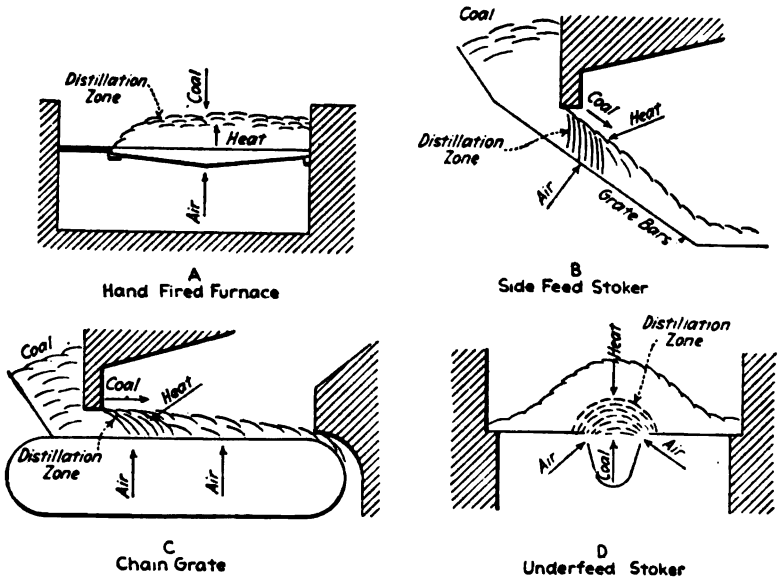

Fig. 19. Classification of Furnaces According to Method of Feeding Coal and Air.

comes in a continuous stream through the grate, from the bottom. Some air should also be supplied over the fuel-bed.

In the side-feed stoker (B) the coal is fed continuously from the side and the air from the bottom at right angles to the path of the coal. The coal moves down the grate by gravity and by the agitation of the grate bars. Air can also be admitted through special tuyeres placed immediately above the fuel-bed, at the entrance of the coal into the furnace. Some air enters through the coal in the magazine.

The diagram (C) shows a furnace equipped with traveling or chain grate. The feeding of the coal is accomplished by the motion of the grate. The air and coal are both fed continuously, the air being fed at right angles to the coal path. Additional air is supplied through the coal in the magazine, through the thin fuel-bed near the bridge wall, and through leaks along the side walls.

In the underfeed stoker (D) the air and coal are fed uniformly and in the same direction. Air is also admitted through the damper in the front door of the furnace.

These styles of furnaces are shown in the following illustrations with settings of Heine boilers as installed in modern plants under standard as well as special conditions, and for a variety of fuels. In practice each problem

has to be studied to decide upon the proper furnace design and proportions. Generally a change in the location and in the type of tile used in the baffles will give furnaces for particular combustion requirements.

In vertically-baffled boilers the extinguishing action of the tubes, with the short flame travel, produces an undesirable amount of smoke. If the combustion in these boilers is to be smokeless the furnace volume and therefore the setting height must be increased considerably. Even then the mixing effect of the bridge wall and combustion chamber are absent.

The horizontally-baffled boiler has the necessary furnace volume with the ordinary height of setting. Horizontal baffles, in hand or stoker fired boilers, permit a long travel of unchilled flame and maximum time for completion of combustion. The turn of the gases at the bridge-wall disrupts any tendency to stratify, and this mixing effect also promotes combustion.

Settings for Hand Firing

IN burning bituminous coal, it is not practicable, according to *O. Monnett*, to combine a hand-fired furnace with a vertically baffled water-tube boiler. To prevent smoke the furnace must be arranged with a horizontal baffle, as in Fig. 20. In this design the lower part of the tubes over the fire is left bare by using T-tiles for the baffle. For the high temperature zone over the bridge wall and for some distance back of it, the tubes are entirely encased in C-tiles. This part of the baffle is extended from the T-tiles to the deflection arch provided to mix the air and gases thoroughly.

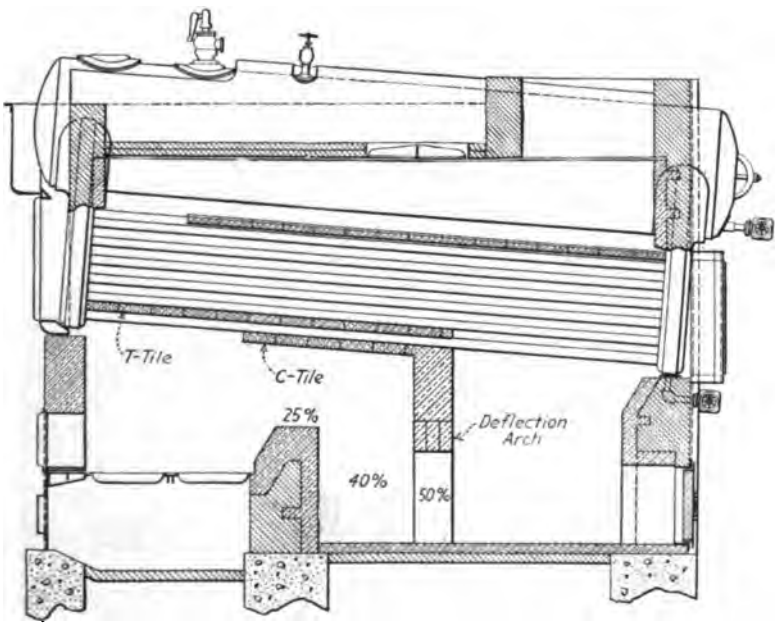

Fig. 20. Hand-fired Setting for Bituminous Coal (Areas of Passages are given in Percent of Grate Area.)

Central High School, Washington, D. C., containing 1224 H. P. of Heine Standard Boilers.

The proportions of the furnace for this setting are determined on a basis of grate area. The parts are placed so that there will be from 20 to 25 per cent of the grate surface in the free opening above the bridge-wall, 40 per cent between the bridge-wall and arch, and 50 per cent free area under the arch. The installation of four siphon steam jets, placed across the furnace above the fire doors, is recommended to give a secondary air supply. This type of setting has been successful where soft coal is used and where municipal smoke ordinances are enforced.

Another form of setting for hand-firing of bituminous coal is the down-draft furnace, shown in Fig. 25. Boilers so arranged have given excellent results both in smoke prevention and in fuel economy.

As anthracite coal runs much lower in volatile matter than bituminous coal, the flame is much shorter and practically all of the combustion occurs in the fuel-bed. The style of setting shown in Fig. 21, can be used for such service. The T-tiles are placed on top of the first row of tubes. This leaves the bottom of the tubes exposed to the heat of the fire but still forms the roof of a combustion chamber in which the gases are retained and thoroughly mixed until combustion is complete.

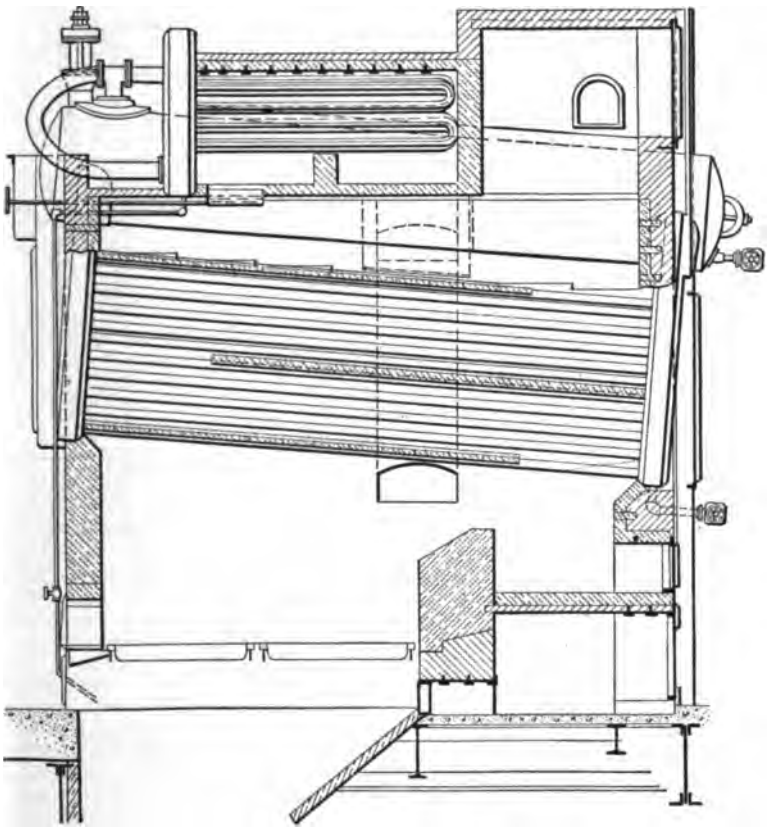

Fig. 21. Setting for Hand-firing of Anthracite Coal.

When the distance between the grate and first tube bank is greater than that shown in Fig. 21, the lower baffle can be placed on the second or third row of tubes. In another modification, Fig. 22, the baffle on the lowest row of tubes is not used, and the bridge wall is built up to the bottom row of tubes.

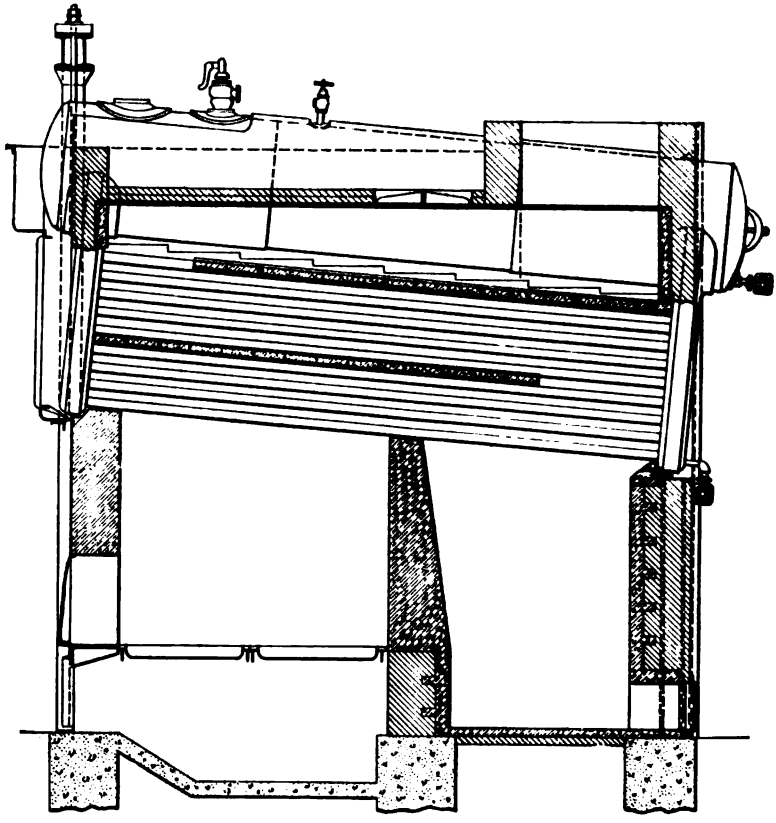

Fig. 22. Alternative Setting for Hand-firing of Anthracite Coal.

Grates for Hand-Firing

THE grate in a boiler furnace not only supports the fuel-bed, but also admits the air for combustion. It is almost invariably made of cast iron, which melts at about 2100 deg., while the lower layer of the fuel-bed on it is at about 4000 deg. temperature. A grate does not become very hot when the air is passing through it, and it is further protected against high temperatures by the insulating effect of the layer of ash between the grate bars and the fuel. The surfaces and air spaces should be so proportioned that they will be kept uniformly cool by the flowing air. However, with a burning fire on the grate and the draft obstructed or shut off, heat will accumulate, and the

grate will become red hot. If the grate does not burn out or melt and fall into the ash-pit at this high temperature, it will be twisted, warped, and will sag. The same harmful effects are caused by accumulations of ash and burning coal in the ash-pit.

Cast iron is weak at a dull-red heat and the high temperature causes it to grow. Repeated heating will cause a grate bar 15 in. long to grow ½ in., according to *W. J. Keep*, and the pressure it will exert on the dead plate and bridge wall will force it into a curved shape, unless proper provision for expansion is made. The strength of cast iron decreases rapidly above 680 deg., which is about the ordinary temperature of the front grate bar. At this temperature the tensile breaking load is 23,750 lb. per sq. in., while at a temperature of 1250 deg. the breaking load is only 8,023 lb. per sq. in. After being reheated cast iron never contracts to its original length. The cast iron for grates should be composed of the highest grade materials having great heat-resisting qualities, so that the grate will expand and contract evenly.

Hand-fired grates are of the stationary, shaking, dumping, and the combined rocking or shaking and dumping types. Grate bars are manufactured in numerous patterns and designs with curved or flat tops. The styles used for the burning of the regular sizes of coal are illustrated in Fig. 23.

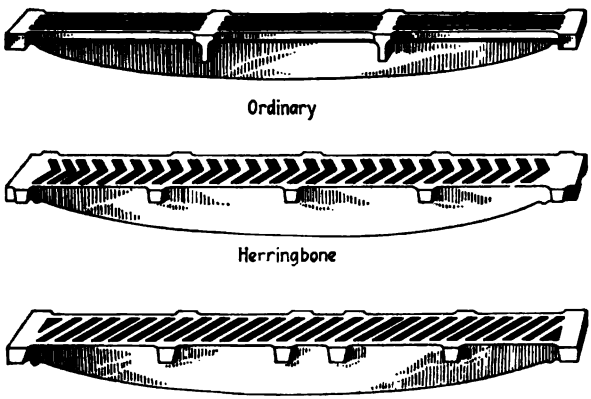

Fig. 23. Typical Styles of Stationary Grate Bars.

The style of grate bar and the number, size and shape of air spaces are determined by the coal for which the grate is to be used. The free area through the grate should not allow the coal to drop through into the ashpit, but should be large enough to prevent clogging with ashes and cinders. Air space areas of 30 to 50 per cent of the total grate area have been found satisfactory with natural draft. It is common practice to allow ⅛ in. air space for No. 3 buckwheat, ¼ in. for No. 2 buckwheat, 5/16 in. for No. 1 buckwheat, ⅜ in. air space for pea coal and ½ in. openings for bituminous coal.

In small plants, where larger sizes of anthracite are burnt, the plain grate is probably as satisfactory as any; when coals of high ash content and which clinker are used, the shaking or rocking grate is to be preferred. The grate must be so constructed that the moving parts will not clog and so that their action will break up the clinker.

Anthracite dust, silt, culm and screenings are burnt on grates with small openings and require mechanical draft.

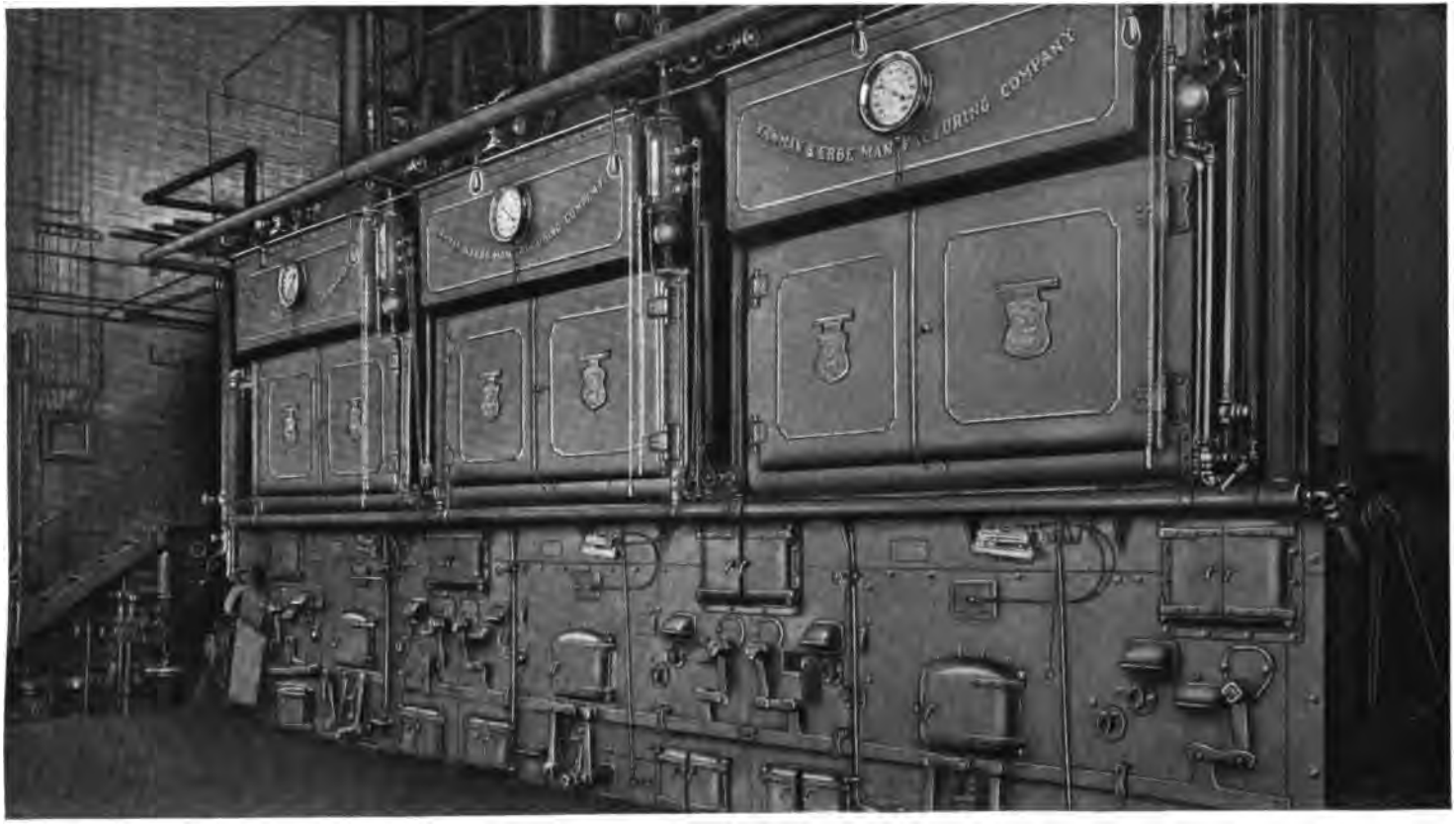

Three 250 H. P. Heine Standard Boilers set over Murphy Stokers in the Plant of Yawman & Erbe Co., Rochester, N. Y.

Hollow grate bars, with a blower system, are sometimes used for burning sawdust, chips, shavings, tanbark and bagasse. Such grates should have large air spaces so that partial filling-up of the openings will not interfere with the air supply for proper combustion. In making up the required grate surface, the hollow bars are sometimes alternated with ordinary bars to suit the fuel.

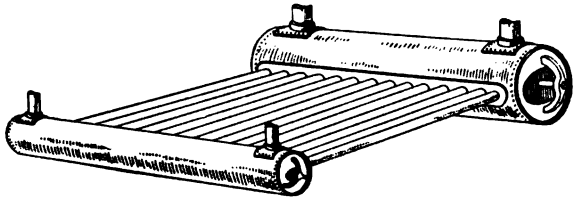

Fig. 24. Water Grate.

Grate bars are generally made in sections not more than 3 ft. long, so that the total grate extension is a multiple of this length. Grate bars are 3 to 6 in. deep at the middle, tapering down to about 1 in. at the ends. To allow for expansion, the bars are usually made about 2 per cent shorter than the space for which they are intended, so that they will fit when the boiler is operating. Most grate bars are in one piece, although some have a body portion and a removable sectional top, which contains the air spaces.

The total grate length is limited by the physical ability of the fireman to throw the coal to the farthest end. Grates 10 to 12 ft. in length are sometimes used for anthracite. The limits for bituminous coal are 6 to 8 ft.

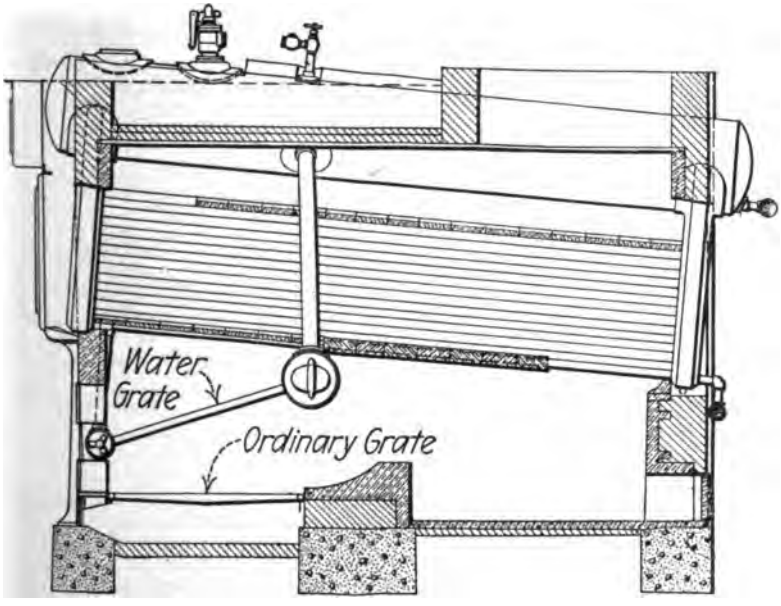

Fig. 25. Water Grate as Used in Down-draft Boiler Setting.

because it is more difficult to handle the fire. Long grates are usually inclined from ¾ in. to 1¼ in. per foot in length toward the rear, so as to aid in firing.

Down-draft settings for the smokeless combustion of soft coal utilize a so-called *water-grate*, Fig. 24, which is placed above the ordinary grate in the boiler, as shown in Fig. 25. The water-grate consists of a series of pipes fastened to steel headers, so connected to the boiler that water will circulate through it. Fresh coal is fed onto the water grate, and the air admitted above it travels downward through the fuel-bed. As the coal becomes partly consumed, it falls through to the grate below, where the combustion is completed. The space between these two grates is the combustion chamber, in which the gases are consumed before passing through to the chimney.

Settings for Mechanical Stokers

WITH *chain grate* stokers, Heine boiler settings are as shown in Fig. 26. The tiles of the lower baffle are placed on the first row of tubes, either encircling the tubes entirely or exposing the bottom half. A head room of 7½ feet from the floor line to the underside of the waterleg gives the desired furnace proportions. This dimension may vary considerably without affecting the boiler performance, but should not be less than 6½ feet. This setting has been found to give good economy and smokeless operation for loads up to 200 per cent of rating.

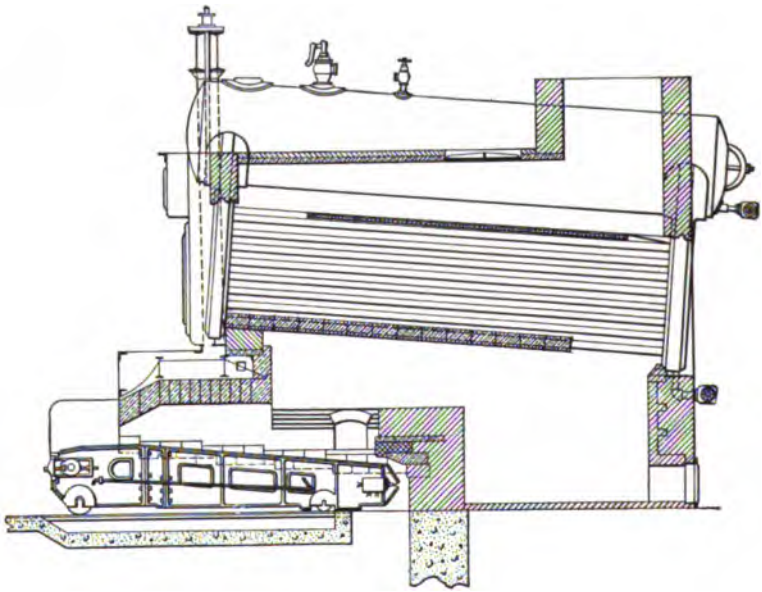

Fig. 26. Chain Grate Setting.

With *side-feed* or *double inclined* stokers, the boiler can be set with an extended furnace or with a flush front. In the typical setting, Fig. 27, the bottom row of tubes is enclosed in baffle tiles to give a solid roof, and an auxiliary bridge wall breaks up the currents of gases and insures a thorough mixture. The side-feed stoker combined with a vertically baffled boiler will not give smokeless combustion. With horizontal baffles a 7½-ft. clearance is sufficient between the bottom of the front header and the floor line.

The *over-feed* type of stoker fits in at the front of the boiler and has a shaking or dumping grate at the foot of the bridge-wall. For boilers with horizontal baffles, a 6-ft. setting is required, while for vertical baffles the clearance should be about 9 feet. Fig. 28 shows a Heine boiler and a front-

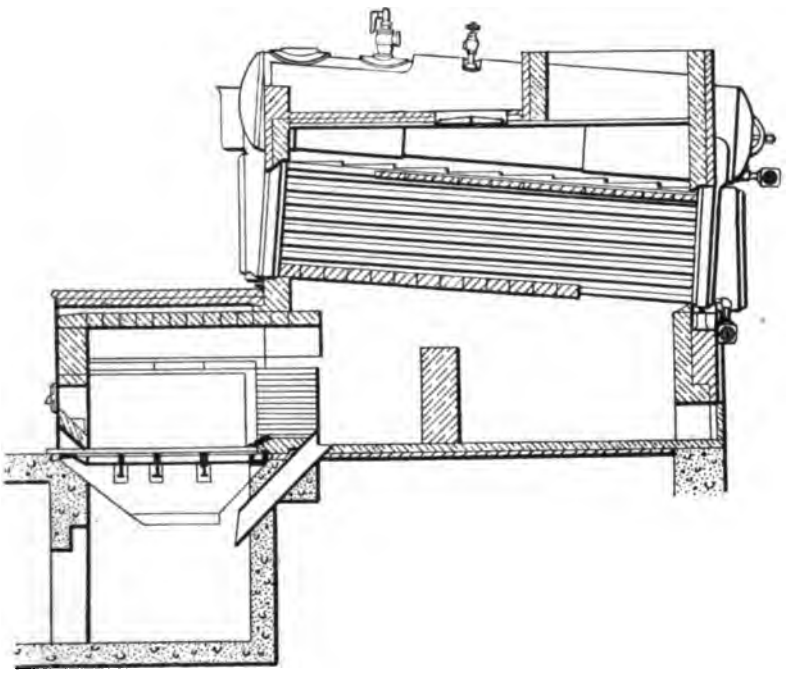

Fig. 27. Side Feed Stoker and Extension Furnace Setting.

feed stoker. The typical baffle arrangement is used, but deflection arches or piers sometimes aid in mixing the gases. When the clear opening between the top of the bridge-wall and the bottom of the first row of tubes is not less than 40 per cent of the grate area, piers are not required.

Erecting Two 607 H. P. Heine Standard Boilers in the Pittsburgh, Pa. Plant of the H. J. Heinz Co. This Plant contains 5500 H. P. of Heine Standard Boilers. The Company has Installed in its Subsidiaries 9250 H. P. of Heine Standard Boilers.

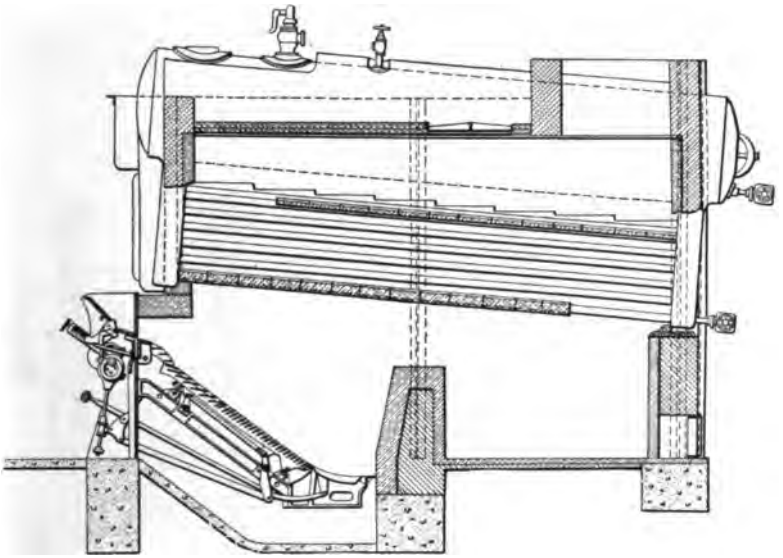

Fig. 28. Setting for Overfeed Stoker.

With the *underfeed stoker,* the rates of combustion are usually high, so that a great volume of combustible gas has to be burned in the furnace before being chilled by the boiler surface. For this reason, the standard Heine furnace design, Fig. 29, is generally retained. The settings can be lower for the horizontal types of underfeed stokers than for the inclined types.

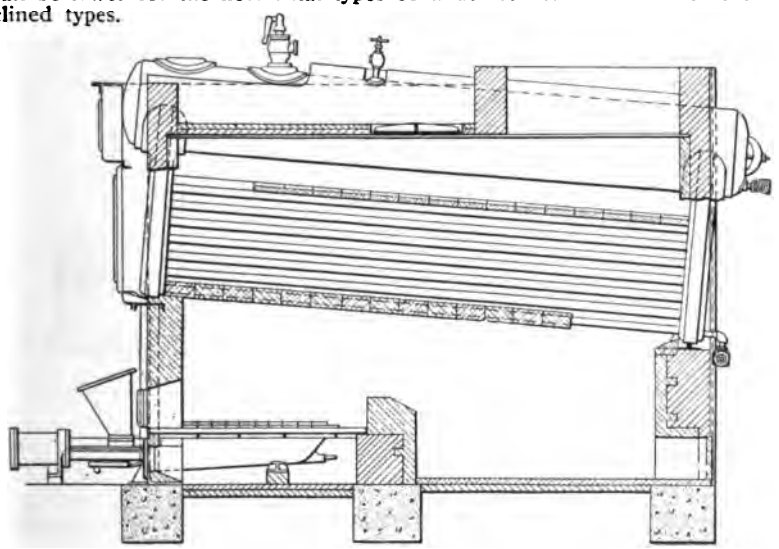

Fig. 29. Setting for Horizontal Underfeed Stoker.

Fig. 30 shows a Heine boiler and superheater set for mechanical draft, and an underfeed stoker of the inclined type. The headroom between the waterleg and the floor line is about 7 feet. The lower baffle is made to

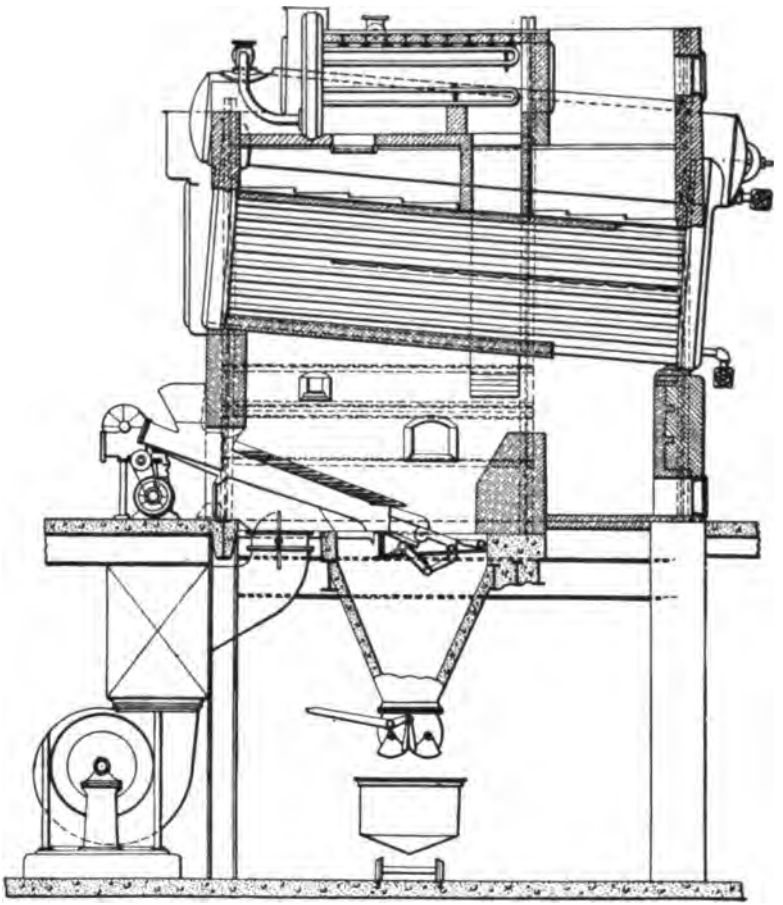

Fig. 30. Inclined Underfeed Stoker in Heine Boiler, Equipped with Superheater and Mechanical Draft.

enclose the tubes. By changing the tile to the third row of tubes, the setting in Fig. 31 is obtained. In this, more heat is absorbed by direct radiation, and excessive furnace temperatures are avoided.

By installing *double stokers,* boiler capacity and efficiency can be increased for almost the same space. One stoker is placed at the front and one at the rear of the setting, as in Fig. 32. By forcing a greater weight of gases through the boiler, the capacity is increased. The larger furnace

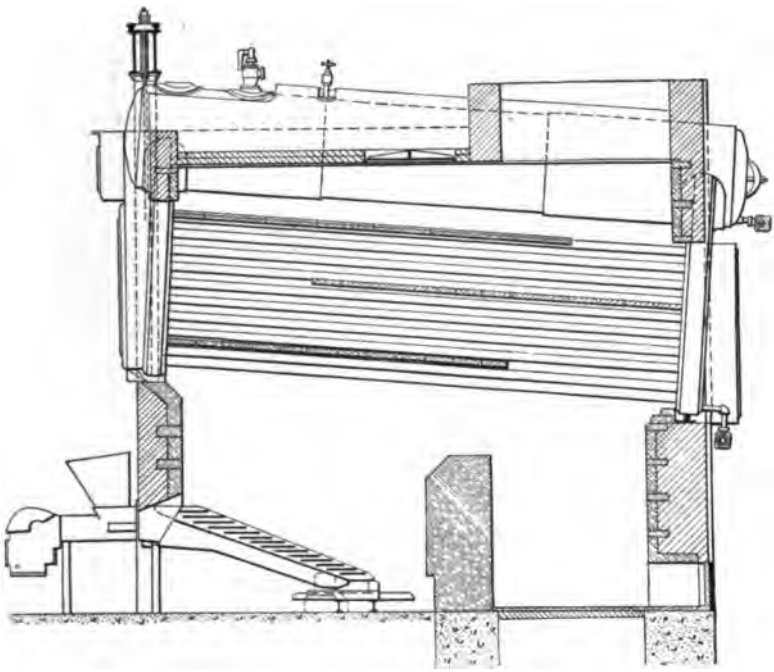

Fig. 31. Modified Stoker Setting.

volume gives better combustion; also, a larger proportion of heat is radiated to the boiler. At heavy loads the overall efficiency is higher than when one stoker is used. Any variation in the efficiency is due to changes in the furnace operation, because the efficiency of the boiler, proper, as a heat absorber, is practically constant.

Methods of handling coal and ash are discussed in Chapter 16 on OPERATION.

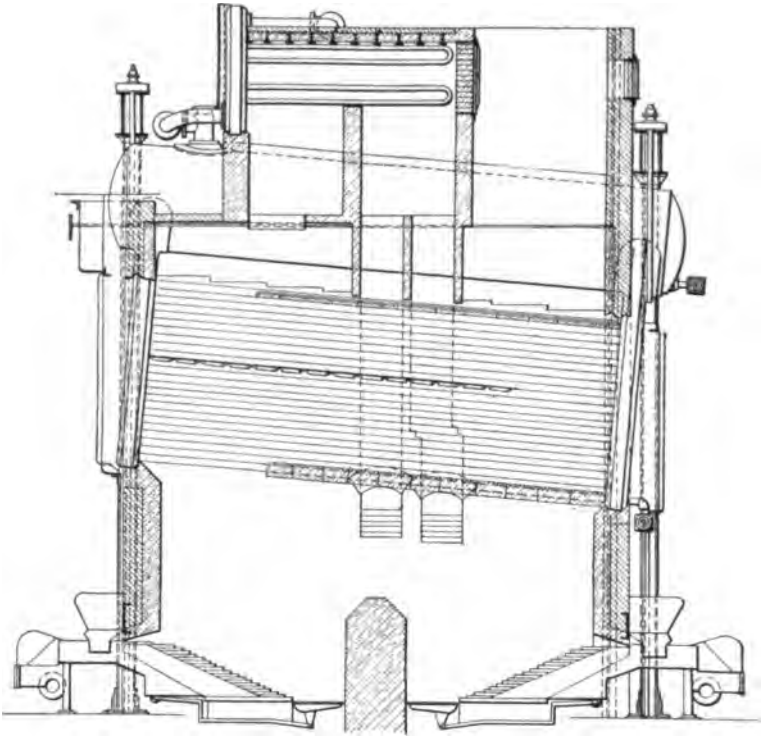

Fig. 32. Double Stoker Setting for Heine Boiler with Superheater.

Ashpits

THE ashpit is made of concrete or brick. The design depends upon the boiler load, kind of coal, type of furnace, whether hand or stoker fired, and of setting. Ashpits satisfactory with a mechanical or pneumatic system may give trouble for hand removal, while pits for hand operation may also prove satisfactory with a conveyor.

The ashpit should be large enough to accommodate the ashes from an 18 to 20-hr. run. Such pits eliminate the handling of ashes by the night shift. They also protect the grates or stokers against destruction by the action of accumulated ash and clinker. In practice, however, ashpits for hand-fired furnaces are seldom of more than an 8 or 10-hr. capacity. Pits having capacities of 12 to 14 hr. are generally provided for stoker installations.

To proportion the pit for a given period, the maximum amount of fuel that can be burned on the grates must first be determined. The maximum percentage of ash or refuse should be figured on the basis of the lowest grade of fuel to be burned. The pounds of ash and refuse to be handled per hour is the product obtained by multiplying the percentage refuse and the hourly fuel consumption. The volume is determined by allowing 40 lb. of ash to the cubic foot. The total capacity required then depends upon the periods of ash removal.

Ashpits should be so accessible that they can be easily cleaned; otherwise the work may not be attended to regularly, and the grates or stoker mechanism will be damaged. Fairly small pits are easily cleaned and give better results than large pits, which involve heavy labor. Ample room must be provided for the use of a hoe or shovel. The pit should be not longer than 8 feet. Doors, gates or valves, as used on hoppers, should be arranged to open and close easily and should be accessible from the floor. Means of inspection should be provided to make sure that all the ash has been discharged. With reasonable care, the cost of ashpit repairs or relining can be kept low.

Some typical designs of ashpits are given for different operating conditions. The simplest form is the usual pit for hand-fired furnaces, as shown in Fig. 33.

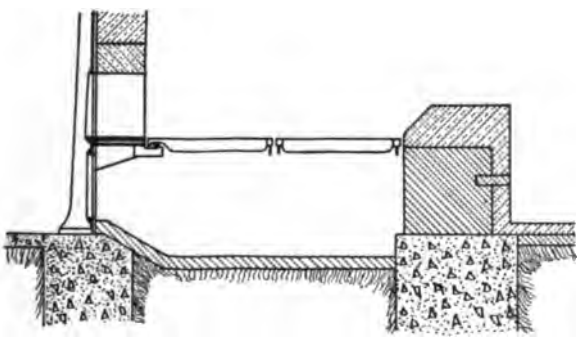

Fig. 33. Common Ashpit for Hand Firing.

A modification to obtain greater ash capacity without sacrificing ease of ash removal is shown in Fig. 34.

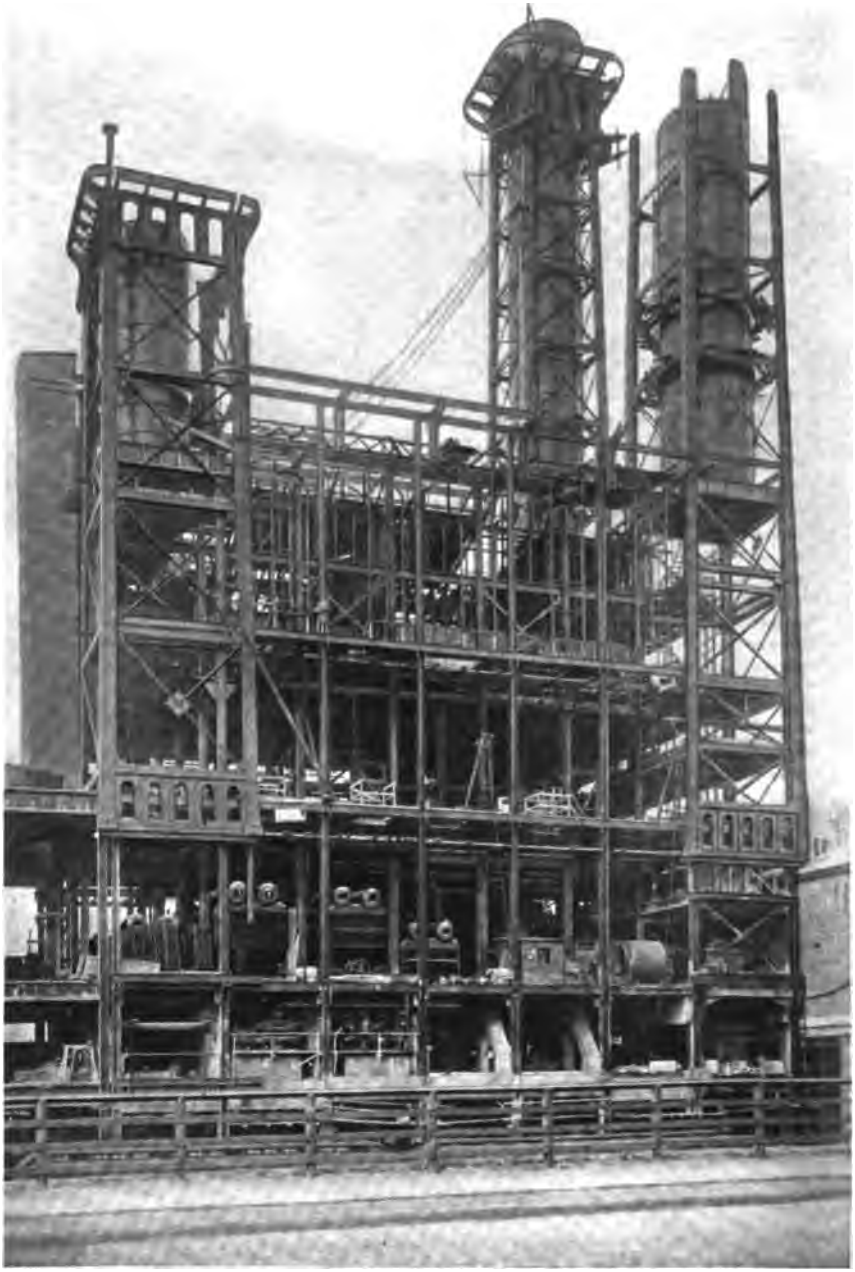

Grand Central Terminal of the New York Central Railroad, New York City, in course of construction. This building contains 8550 H. P. of Heine Standard Boilers.

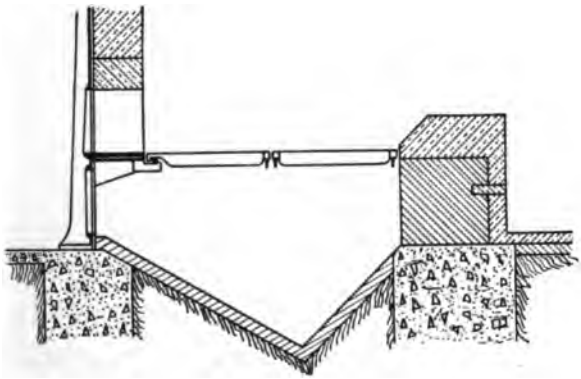

Fig. 34. Large Capacity Ashpit for Hand Firing.

A common form, particularly for side-feed stokers, is shown in Fig. 35. The cost of construction and maintenance is low; but it is very difficult to remove ash from pits of this form unless a pneumatic or steam conveyor is used.

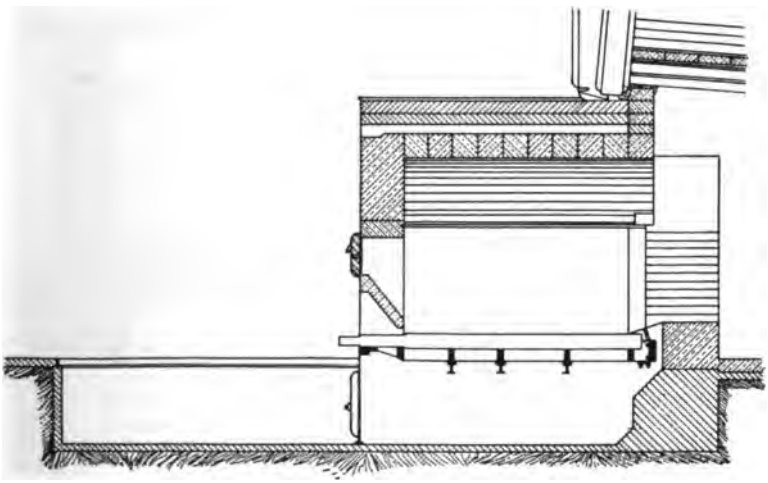

Fig. 35. Rectangular Ashpit of Large Capacity.

In modern stoker-fired plants it is the general practice to use hopper ashpits. The labor of handling the ash is greatly reduced and the installation of ash conveyors is more convenient. The tunnel under the firing floor enables the ash to be easily hoed from the hopper ashpit into conveyors or ash cars without interfering with the work on the firing floor. Fig. 36 shows an example of such an arrangement.

This system is also frequently used in hand-fired furnaces burning very low grade fuels having a high ash content. Dumping grates or dumping dead plates are then generally used.

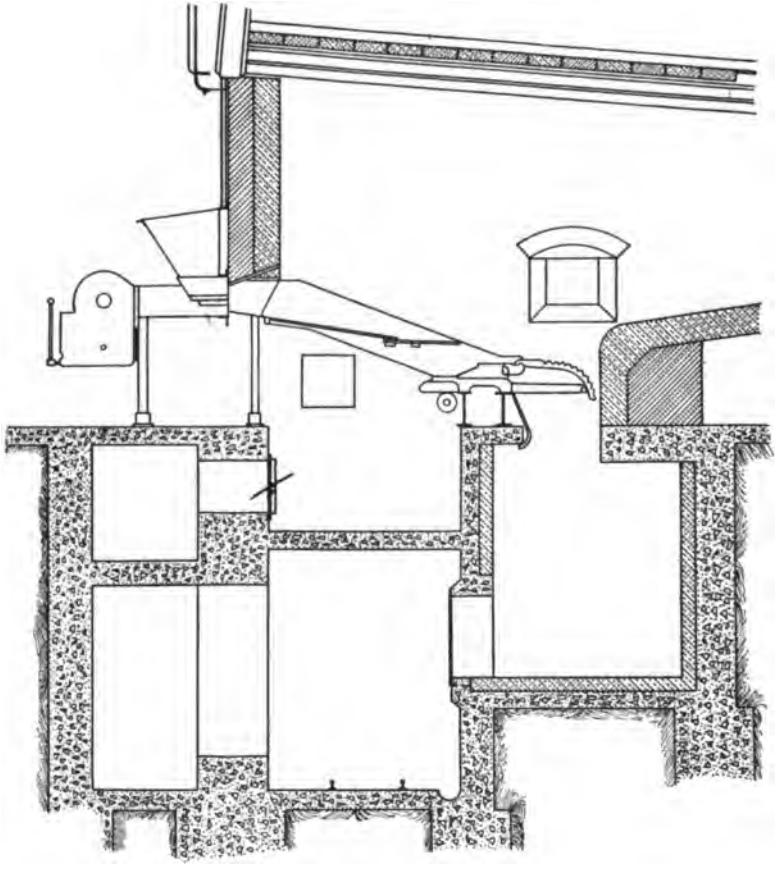

Fig. 36. Hopper Ashpit and Tunnel.

A still more convenient method which is adopted in most modern power plants is to provide a basement as large as the boiler room. Ample space is then available for ash-handling apparatus, forced-draft air ducts and other auxiliaries; and the removal of ash is done under more comfortable conditions. A typical arrangement of this kind is shown in Fig. 37.

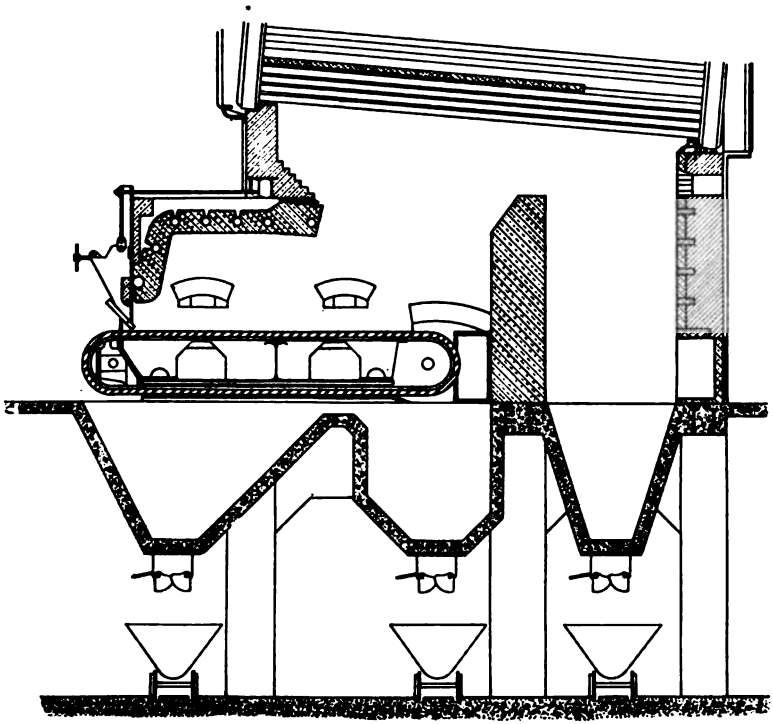

Fig. 37. Hopper Ashpits with Basement under Boiler Room.

In many cases separate hoppers are provided to receive ash and clinker, and to recover coal dropping from the front part of the grate. The combustion chamber is often provided with a hopper bottom to facilitate the removal of dust.

Some suggestion on the design of ashpits may also be obtained from chapter on mechanical stokers, and from the part of the chapter on economical boiler operation, referring to ash handling.

Hopper ashpits should be lined with firebrick. There is always the possibility of combustible matter burning in the ashpit owing to careless operation of mechanical stokers or dumping grates, and fairly high temperatures are often encountered in such cases.

Ash doors and valves at the bottom of hopper ash-pits should be airtight or nearly so. With natural draft sufficient air will be drawn in through leaky doors to cause brisk combustion under conditions described above, and the ash may be melted into large clinkers, which are difficult to remove and which sometimes must be broken up before they can be got through the doors or valves. With forced draft under pressure in the hopper ashpit, leaky doors may increase the load on the fans and cause wasteful power consumption.

Settings for Powdered Coal

POWDERED coal has been used extensively for the past twenty-five years in certain metallurgical processes, particularly in the cement industry, and its success in this and similar industries is amply testified by its extensive use. Certain characteristics in the combustion of pulverized coal

have brought out the fact that under some conditions it is feasible to utilize this fuel for use in generating steam. In the past five years a number of boiler plants have been equipped to burn this type of fuel.

Boiler furnace setting design for the successful combustion of pulverized coal was a subject which was not thoroughly understood when the first installations of this sort were made, and hence the early results obtained were not satisfactory. However, the subject is now past an experimental stage and it can be said that the following remarks on furnace design are in general indicative of good practice. The furnace volume should be so proportioned that combustion is completed before the tube bank is reached.

About 2 to 2½ cu. ft. of furnace volume should be provided for each boiler horsepower developed, assuming that the combustion chamber is nearly in the form of a cube. Boiler furnaces are not always of cubical form, so that the velocity of the gases should be limited to 7 ft. per second, through the smallest cross sectional area and where the temperatures are highest. This rule for contents holds good for coals in which at least 25 per cent of the total combustible is volatile matter. It does not apply to anthracite, coke breeze, or other low volatile fuels.

An extension furnace is usually employed to obtain the required combustion space. Inasmuch as the ash will tend to adhere in the form of slag on furnace sides and bottoms, it is desirable to have these surfaces slope downward to a slag hole, through which the molten slag can be tapped off. Furnace temperatures are high in this class of firing, and it is essential that the walls be heavy and constructed of first quality refractories.

Fig. 38 shows a Heine cross drum boiler with a typical setting for burning pulverized coal with the Bonnot system.

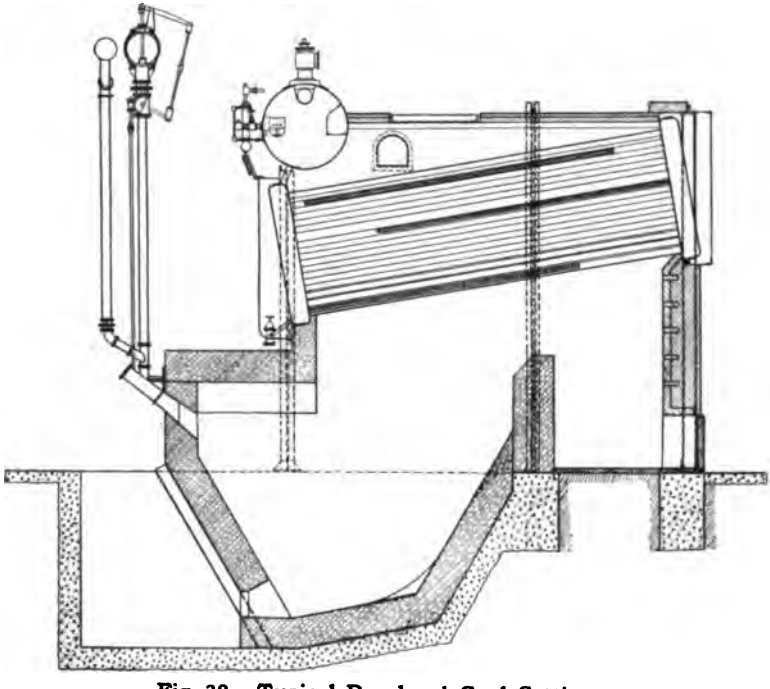

Fig. 38. Typical Powdered Coal Setting.

The use of powdered coal necessitates the installation of a preparation plant, which generally consists of a crusher, a dryer, a pulverizer and suitable elevators, conveyors, dust collectors, hoppers, etc. Fig. 39 shows the layout of a typical preparation plant.

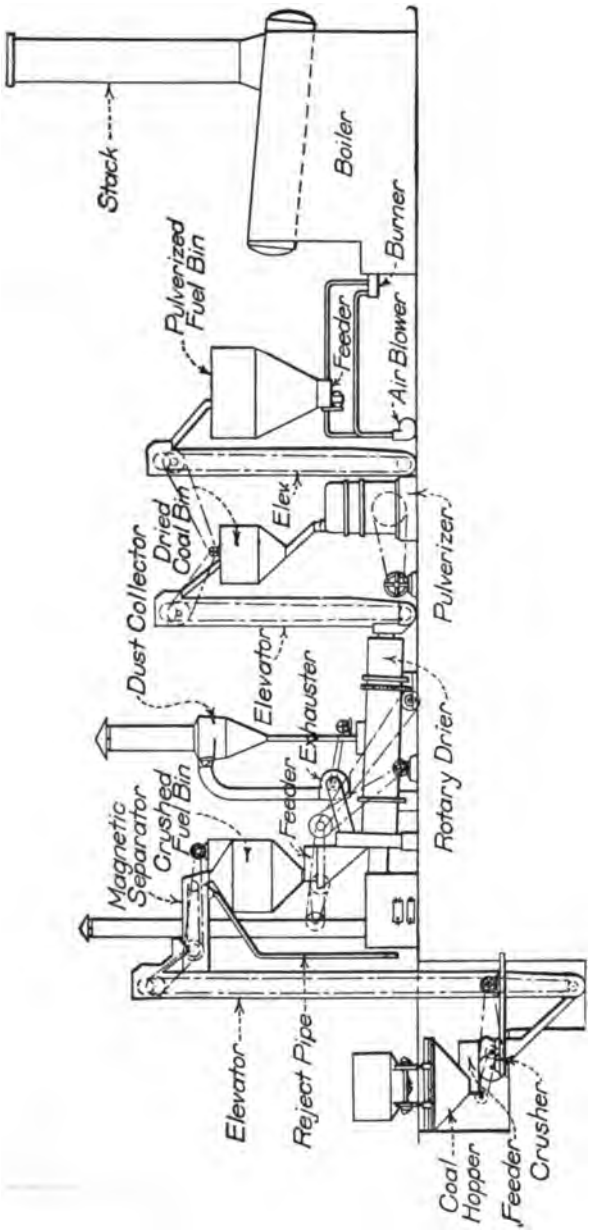

Fig. 39. Equipment Necessary for Powdered Coal Plant.

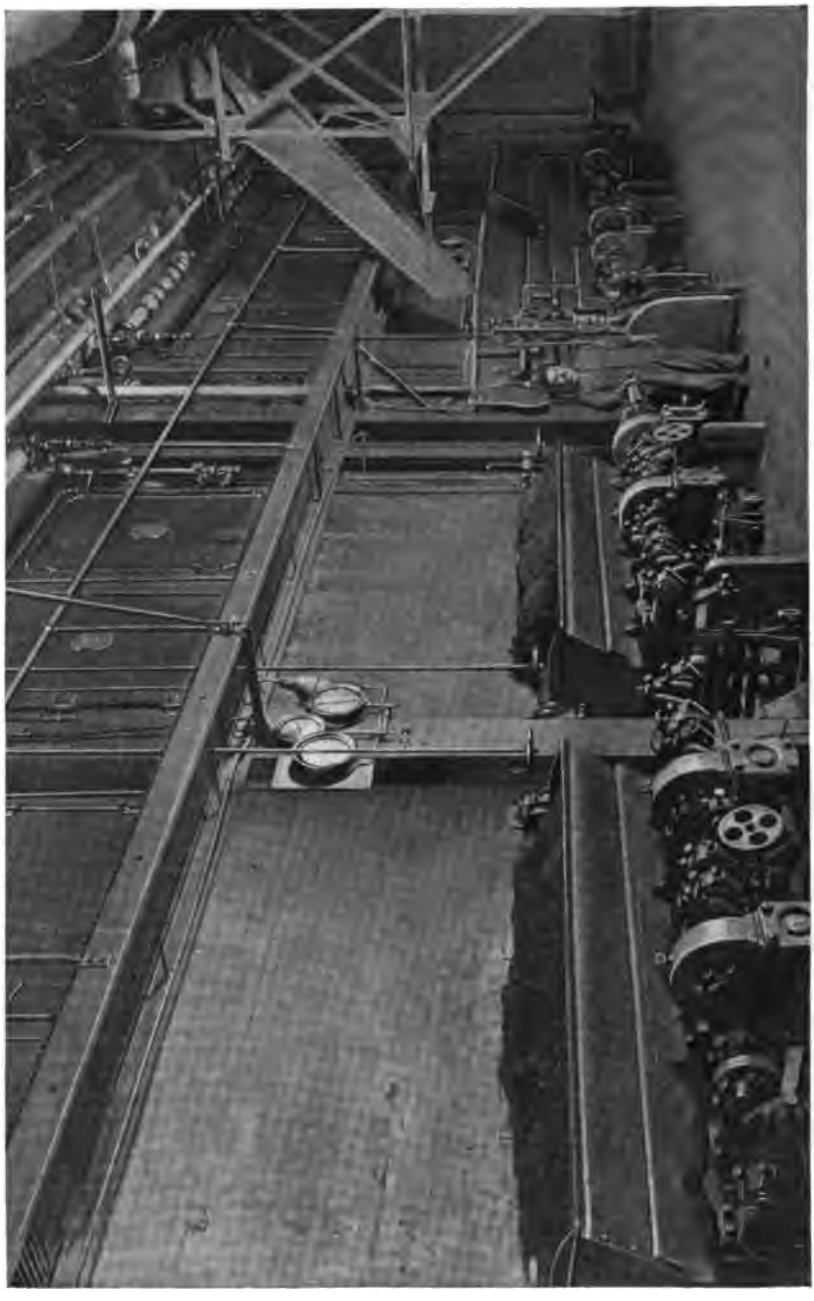

A part of the 4650 H. P. Installation of Heine Standard Boilers set over Taylor Stokers in the Plant of Sidney Blumenthal & Co., Inc., Shelton, Conn.

Powdered coal requires care in handling. In a well-designed and properly operated plant there is but little danger from explosions. However, where hoppers, conveyors, elevators and dust collectors are not tight, and the powdered coal is allowed to escape into the room, there is great liability of explosion due to the possibility of the ignition of the cloud of coal dust by an open flame.

Pulverized coal when newly ground is practically a fluid, because of the entrained air, hence it is readily handled by conveyors and flows easily from hoppers. But, after standing from 36 to 48 hours, the entrained air escapes and the coal settles down and packs in the hoppers. The correct way to overcome the difficulty of packed hoppers is to provide compressed air lines in the hopper sides and thus agitate the packed coal with air, supplemented by hand poking. Hammering the hopper sides to make the coal flow only causes it to pack the tighter in the bin. The sides of powdered coal hoppers should have a slope of not less than sixty degrees.

In order to handle the crushed coal in the pulverizers it is generally necessary to dry it down to from one to two per cent moisture content. The pulverizer is generally adjusted for grinding the coal down to a fineness of 85 per cent through the 200-mesh sieve, and 95 per cent through the 100-mesh sieve. The better combustion conditions obtained with coal of greater fineness than given above does not warrant the cost of the extra pulverization.

Powdered Coal Burners

BURNER Installations usually include a feeder of the screw conveyor type, such as Fig. 40. The capacity of the feeder depends upon the pitch and depth of the screw, while the amount of feed is controlled by its speed, which is adjusted by a variable speed motor drive. Air for feeding and mixing is supplied by a blower at 6 oz. pressure. The fuel, as it drops into this blast of air, is agitated by a paddle wheel so that the mixture of air

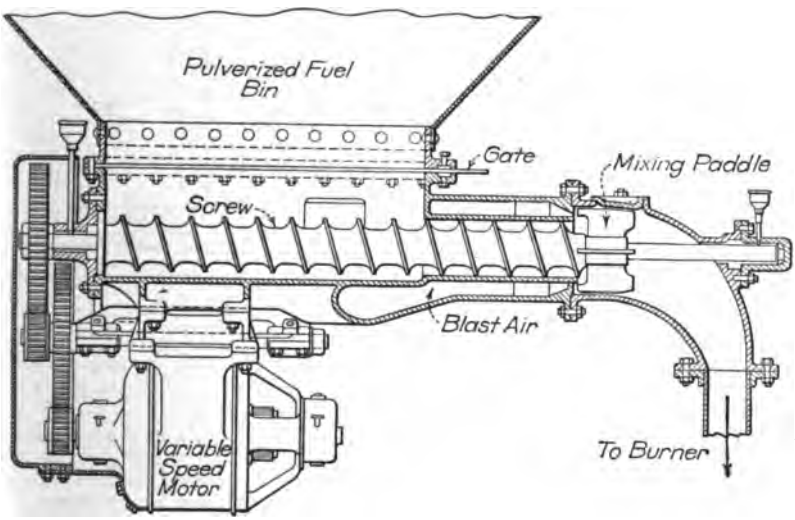

Fig. 40. Lopulco Type Variable-speed Fuel Feeder.

and coal remains practically of constant density until injected into the furnace. The type of burner recommended with this equipment is shown in Fig. 41.

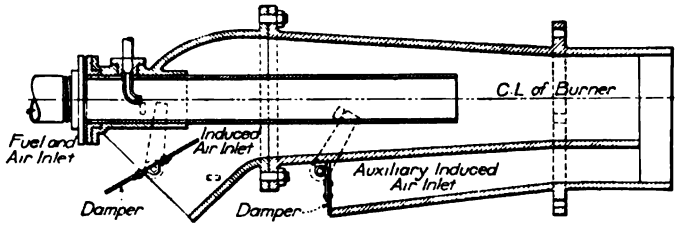

Fig. 41. Lopulco Type Pulverized Fuel Burner.

In the burner shown in Fig. 42, a variable speed screw feeder at the bottom of the pulverized fuel bin delivers the coal, the amount being regulated by a hand wheel. A feeder of this type having a capacity of 500 lb. of fuel an hour can be regulated to deliver as little as 26 lb. an hour. There are two air supplies, both controlled by blast gates. The air for combustion is at 1¼-oz. pressure, while the air conveying the fuel is at 6-oz. pressure, expanding down to 1¼-oz. in the burner. The burner used is of cast iron pipe with a specially shaped elbow in which the fuel pipe is placed.

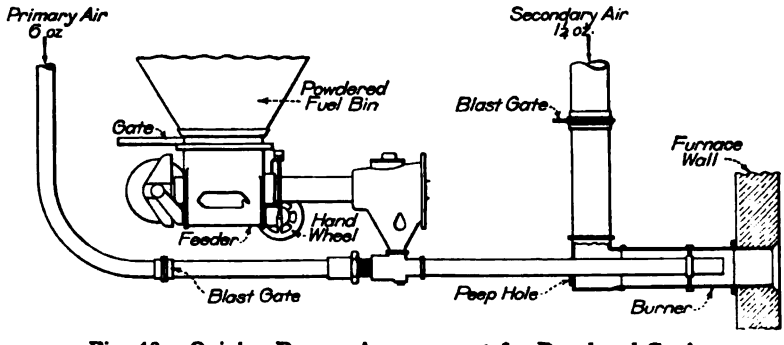

Fig. 42. Quigley Burner Arrangement for Powdered Coal.

In another burner arrangement no mechanism whatever is used. The air in motion through a mass of powdered fuel picks up sufficient fuel to make a combustible mixture.

According to *W. A. Evans*, the control of the fuel supply to the burners by air regulation rather than by varying the speed of a screw feed gives best results. The speed of the screw conveyor cannot be adjusted closely, but the air blast is subject to exact control. For any given feed adjustment, a burner arrangement should deliver the required fuel with not more than a 3 per cent variation in quantity for any number of 5-min. intervals.

Settings for Oil Burning

THE use of petroleum as fuel for steam generation has increased remarkably within the last decade. This has been brought about by the abundant supply resulting from the development of new oil fields, and by certain advantages of oil firing over coal firing. But as the supply of petroleum suitable for fuel has not kept pace with the unusual demand, uncertain deliveries and increasing cost are now working to the disadvantage of those plants using oil. There is no doubt but that oil ranks second in importance to coal as fuel for steam generation, but with the present rapid depletion of oil resources it is evident that oil firing will never supercede the use of coal.

In general the petroleum used for steam generation is of two types, the one commonly called fuel oil is the heavy oil resulting from a partial refining of paraffin crude, and the other is the unrefined, asphaltum-base, crude oil. The oils found in the mid-continent and Eastern fields contain a paraffin base, while those produced in the Gulf and Western fields contain an asphaltum base. A discussion of petroleum with typical analysis is given in Chapter 13 on FUEL.

The success of oil firing depends largely upon proper furnace design, and there are a number of important points which must be considered. First, a large amount of refractory radiating surface must be provided to assist in combustion. Good practice in this regard is to allow from 0.9 to 1.2 square feet of radiating surface per boiler horsepower developed. Second, the furnace volume must be so proportioned that the gases are given time for complete combustion before reaching the comparatively cool heating surface. A combustion space of about 2.0 cubic feet per developed boiler horsepower will satisfactorily meet the average volumetric requirements.

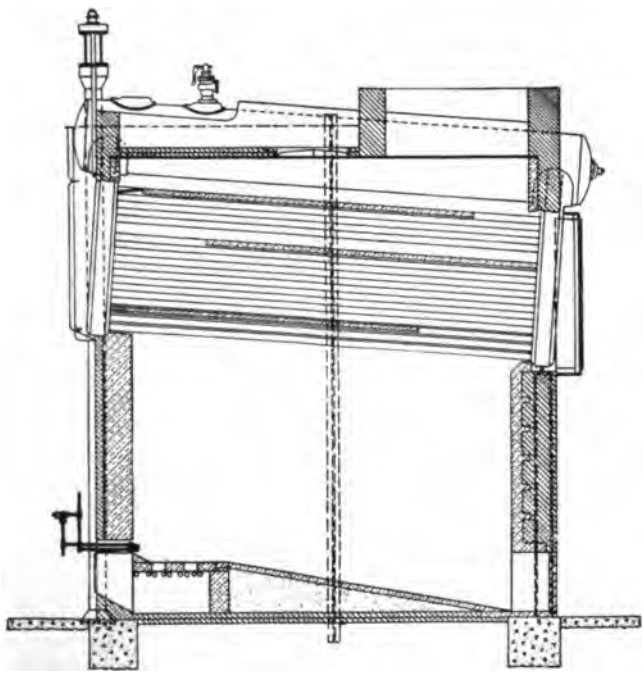

Fig. 43. Typical Oil Burning Setting.

Sixteen 518 H. P. Heine Standard Boilers, equipped with Oil Burners, installed in a large Oil Refinery. This is part of the ~~12,000~~ 20,000 H. P. of Heine Standard Boilers installed in this plant.

In proportioning both radiating surface and combustion space, the proposed ratings at which the boilers are to be operated should be used in the calculations rather than the manufacturers' nominal rated horsepower.

The setting of the Heine boiler, with its large combustion space and ample refractory radiating surface, satisfactorily meets the requirements of oil firing. A typical setting is illustrated in Fig. 43.

The location of the burners in oil-fired setting design, should be such that the flame action will not be localized on portions of the heating surface, so that trouble from blow-torch action with the resultant blistering of tubes will be obviated. The oil or flame should not impinge directly on any portion of the furnace brickwork, because when starting up a furnace the oil dripping down after impingement on such cold surfaces may collect on the floor of the combustion chamber in such quantities that a serious explosion may occur when this pool of oil becomes heated up to the ignition point.

Certain features in chimney design for oil firing are discussed in Chapter 6 on CHIMNEYS.

Oil Burners

ONE advantage in the use of oil for fuel lies largely in the fact that it can be broken up into minute drops so that the air for combustion comes into intimate contact with every particle of the liquid with the combustible gases evolved. The requirements for efficient combustion are a chamber of the proper proportions with the correct air supply properly distributed, and the thorough atomization of the entering fuel, the term "burner" being applied to the atomizing device. The desired effect is secured either by the action of steam or compressed air, which atomizes the oil and carries it into the furnace, or by purely mechanical means.

There are many types of oil burners and these are arranged differently because of the method of operation and the shape of the flame. Sometimes the oil is sprayed out in a fan-like flame between firebrick blocks, which form the approximate boundaries for the flame.

The burner can be inserted through the firing door, with the grates covered with checkerwork with ⅜-in. space between the bricks, but the "low setting" is preferred, in which the grates are removed, and the checkerwork laid on supporting brick in the ashpit and the bridge wall cut level with the top of the checkerwork.

Steam atomizers include outside mixers, in which the steam impinges on the oil current just beyond the tip of the burner, and inside mixers in which the two come into contact within the burner. A combustible mixture of atomized liquid and volatile gases issues from the nozzle. In air atomizers, a jet of air under high or low pressure is used to break up the oil, part of the air for combustion entering in this manner. With mechanical atomizers the oil, preferably heated, is forced out under pressure through a distributing tip, or by the whirling action of a revolving carrier.

Burners utilizing steam for atomization are installed in many stationary oil-burning power plants. They produce thorough atomization, with a long flame, but cannot be used where the steam would be liable to condensation, and great care must always be taken to keep the steam consumption down to a minimum. Air atomizers are desirable in marine work or in stationary plants where it is necessary to conserve the water supply, and they have the further advantage that the latent heat in the exhaust from the blowers or compressors is returned to the boiler, and no heat is carried away by the steam in the flue gases. They give a short, intense flame and the furnace brickwork must be proportioned accordingly. Under proper conditions, either steam or air atomizers can be operated with a steam consumption of 2 or 3 per cent of that produced by the boilers. Mechanical atomizers require

little steam, and their exhaust can all be returned to the boilers. They are, in general, susceptible of very fine adjustment to meet varying load conditions.

Illustrated below are several types of burners now on the market.

In the *Hammel Burner,* Fig. 44, the oil, either heated or cold, is fed into the upper pipe, is forced through the sloping passage in the burner to the mixing chamber C. Here it encounters the entering steam jet at an angle, the heavy hydrocarbons are atomized, and the lighter ones vaporized, and the mixture issues from the burner to the combustion chamber. Thin renewable plates forming the top and bottom of combustion chamber C receive any wear due to grit in the oil, while moisture carried in with the steam flows along the lower passage and is blown out under the steel plate. The *Hammel Oil Burning System* is ordinarily installed without arches, bridge walls or target walls.

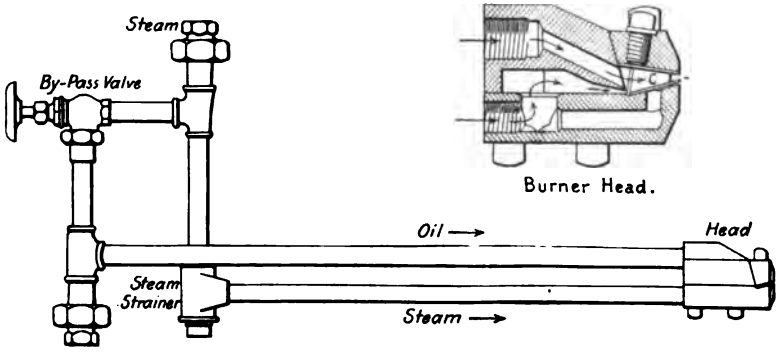

Fig. 44. The Hammel Oil Burner.

The *Staples & Pfeifer Burner,* Fig. 45, operates with steam or air, which flows through the large pipe encasing the oil pipe, until it enters the mixer, which is set with the apex P slightly below the center of the tip. The flow of oil is regulated by the valve rod inside the steam pipe, operated by the wheel shown.

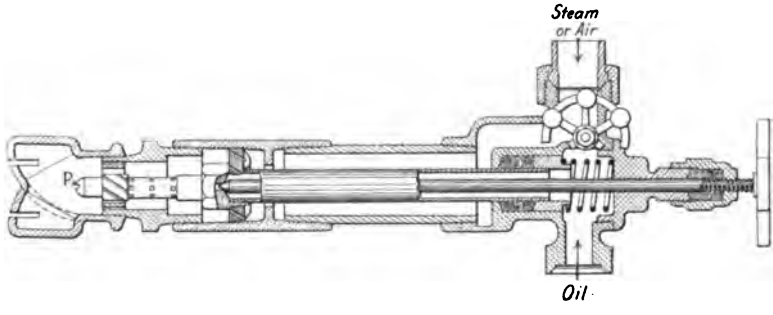

Fig. 45. The Staples and Pfeifer Oil Burner.

In the *Foerst Fuel Oil Burner*, Fig. 46, the oil under gravity or pressure feed flows in through the lower pipe, and the atomizing steam or air through the upper pipe. The illustration shows a fan-tail burner, although burners giving a cone-shaped flame are also furnished.

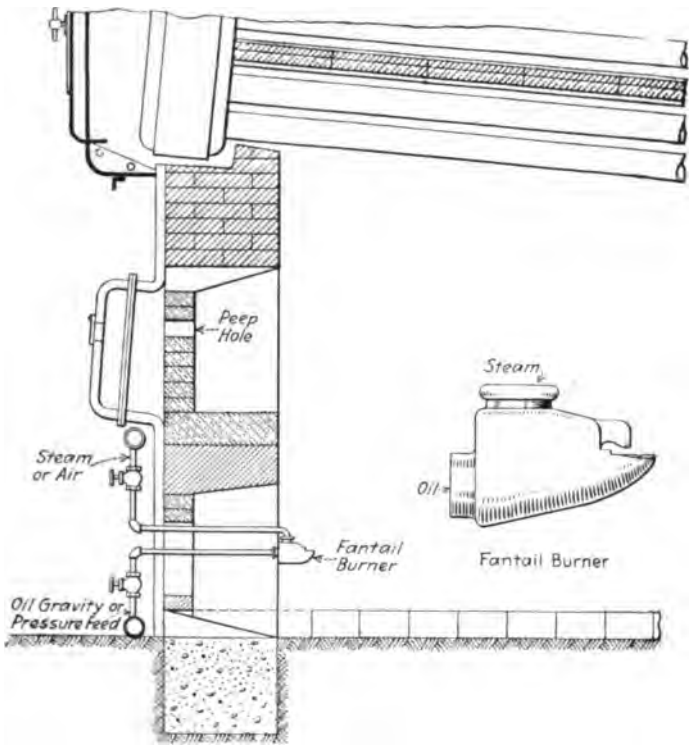

Fig. 46. The Foerst Fan-tail Type Oil Burner.

The *W. N. Best Calorex Burner*, Fig. 47, is an external mixer, employing a jet of the atomizing fluid issuing at right angles to the oil. The atomizer lip is held tightly, but can be raised for blowing out incrustations with the aid of the by-pass. Burners are made for throwing a long, narrow flame, or a fan-shaped one up to 9 feet wide.

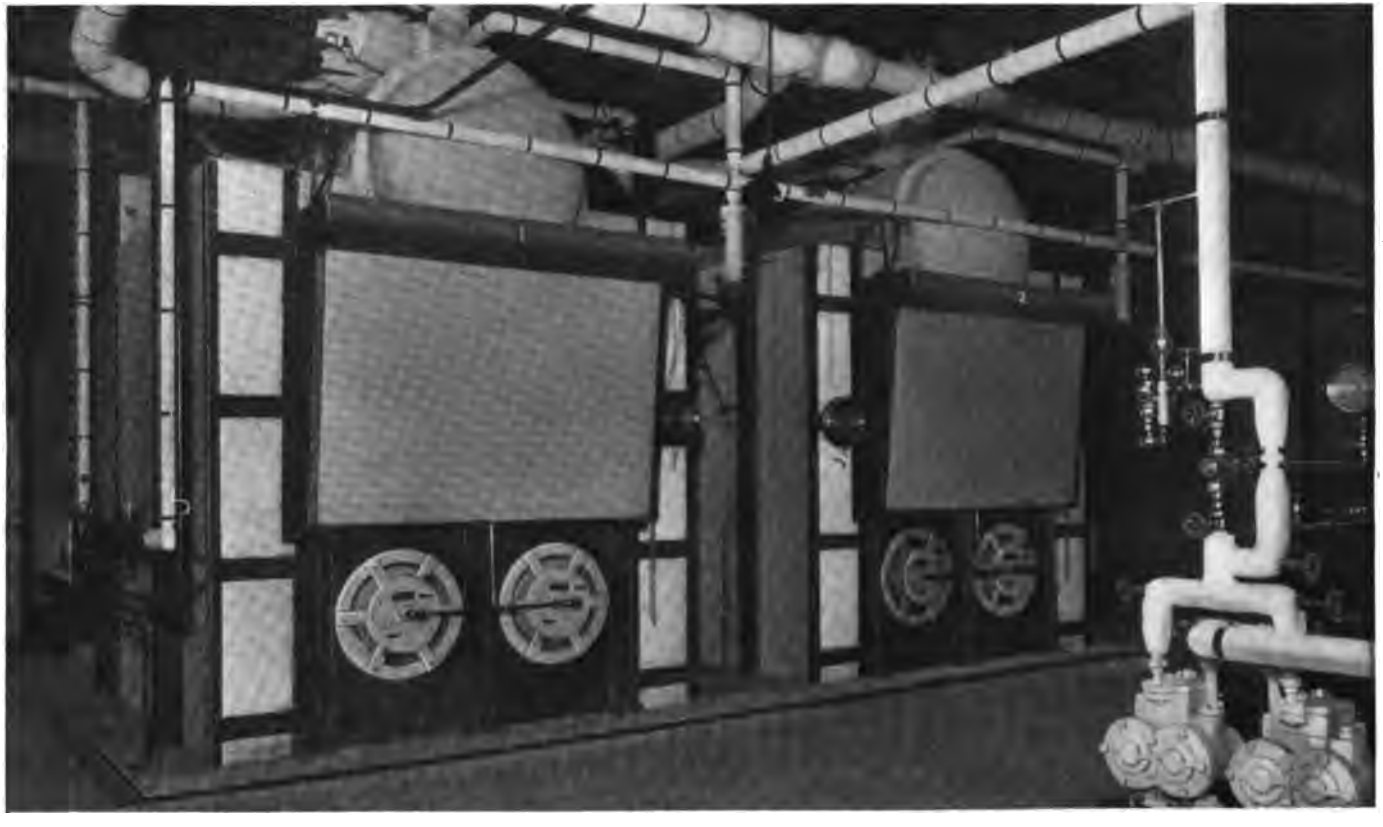

Heine Standard Boilers, equipped with Coen Oil Burners in the Valley Pipe Line Plant at Neganus, Cal.

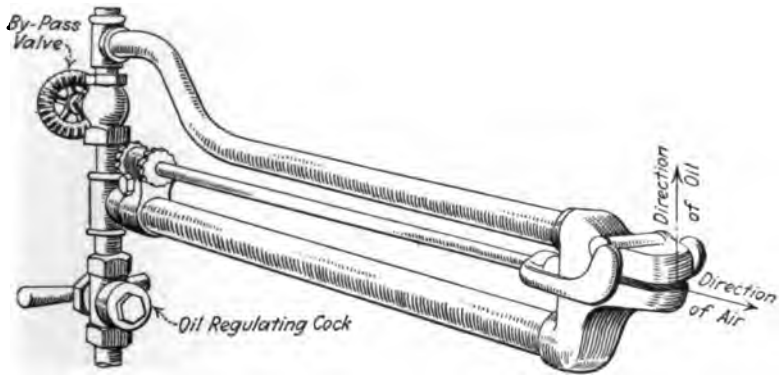

Fig. 47. The W. N. Best "Calorex" Oil Burner.

The *Koerting Cyclone Oil Burner,* Fig. 48, is designed for use where forced draft is required, or where it is desired to make use of a low pressure oil pump already installed. The oil issues from an atomizing nozzle, while the pipe through which it flows is surrounded by a passage carrying compressed air, which receives a gyratory motion, so that the mixture coming out of the cylinder forms a spreading cone, in which the flame remains close to the burner. Air atomizing burners are also supplied, and burners for use where the oil is under gravity, as in small plants.

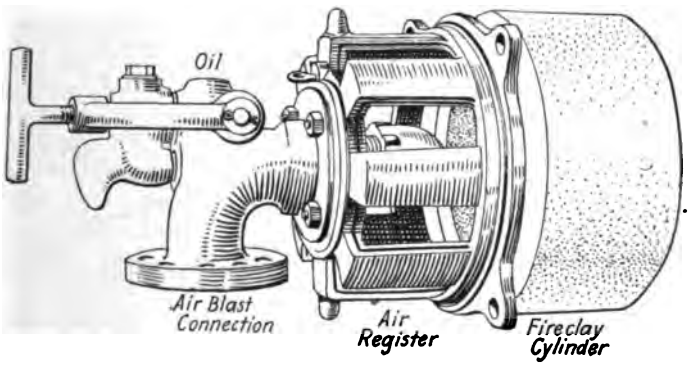

Fig. 48. The Koerting Cyclone Oil Burner.

Of more general application is the *Koerting Mechanical Oil Burning System,* in which the fuel is pumped at high pressure to centrifugal spray nozzles, at a temperature of about 260 deg. F. The burner is surrounded by an adjustable cylindrical air register, admitting air through rectangular openings, giving an intimate mixture of combustible material.

The *Coen System,* Fig. 49, utilizes a mechanical burner into which the oil is pumped under pressure and receives a whirling motion. The adjusting wheel shown in the sketch is used to regulate the flow; by turning it the small ball at the cone end can be lowered, reducing the flow to a minimum without shutting it off.

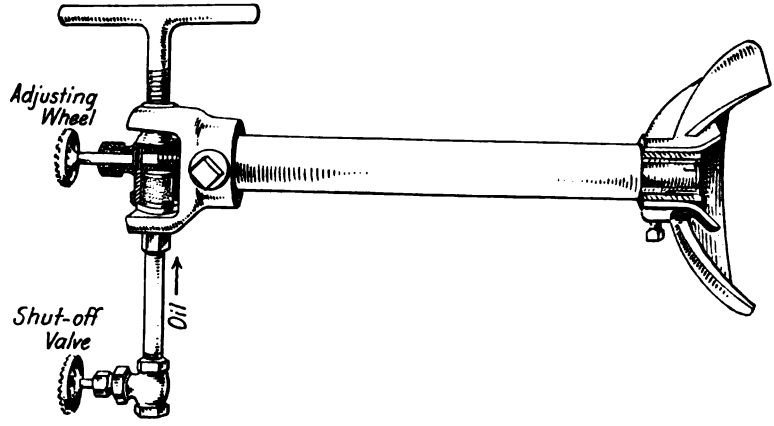

Fig. 49. The Coen Oil Burner.

The *Ray Rotary Burner,* Fig. 50, atomizes the oil in an open cup, revolving at high speed, while air under ½ lb. pressure issues from a cylindrical slot surrounding the atomizer and directs the mixture into the furnace. The pump, blower and atomizer are driven by a ½ H. P. motor, and can be swung from the furnace front.

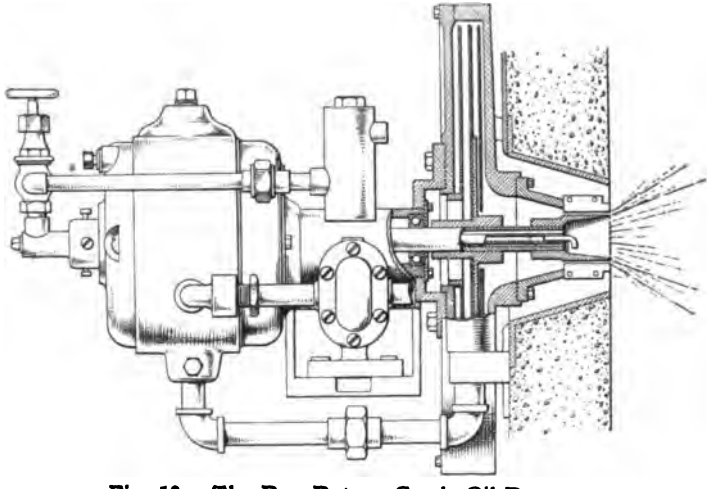

Fig. 50. The Ray Rotary Crude Oil Burner.

Oil as fuel requires the use of certain auxiliary apparatus, most important of which is the oil pump and oil heater.

Fig. 51 illustrates a combination oil pump and condensing type heater set manufactured by the G. E. Witt Co. The oil, after passing through the pump, is delivered to the heater, after which it passes through a strainer to the oil burner line. The heater consists of copper tubes, through which the exhaust steam from the pump circulates, heating the oil in the cast iron chamber surrounding the copper coils.

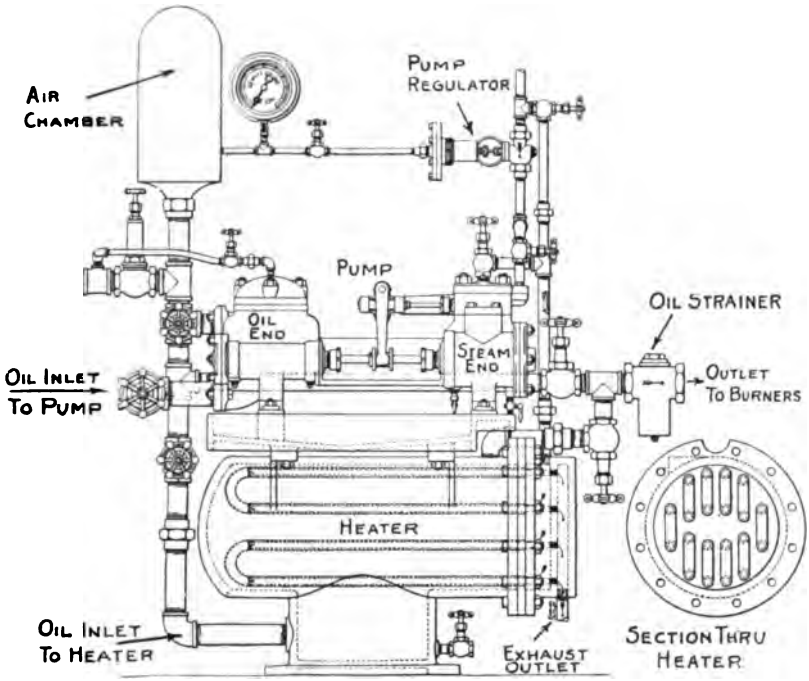

Fig. 51. Witt Oil Pumping Set with Condensing Type Heater.

Tar Burning

WATER gas tar, which is a by-product from gas works using the water gas system, makes excellent fuel for use under steam boilers. An average tar will have a calorific value of about 15,000 to 17,000 B. t. u. per lb. and will weigh about 9.5 lbs. per gallon.

In general it may be said that a furnace suitable for burning crude oil will give satisfactory results when using water gas tar as fuel. Refer to remarks given elsewhere on oil burning furnace design.

Crude oil burners can be satisfactorily used for burning tar, though provision should be made for straining the tar before it reaches the burner, and clean-out connections for blowing out tar lines and burners with steam or compressed air should be provided. Inasmuch as a low flash point is a characteristic of water gas tar, it should not be preheated beyond the temperature at which it is sufficiently fluid to be handled.

Coal gas tar may be used for boiler firing, but the present high value of coal tar derivatives, which are used as bases for dyes, explosives, etc., precludes its use as a fuel.

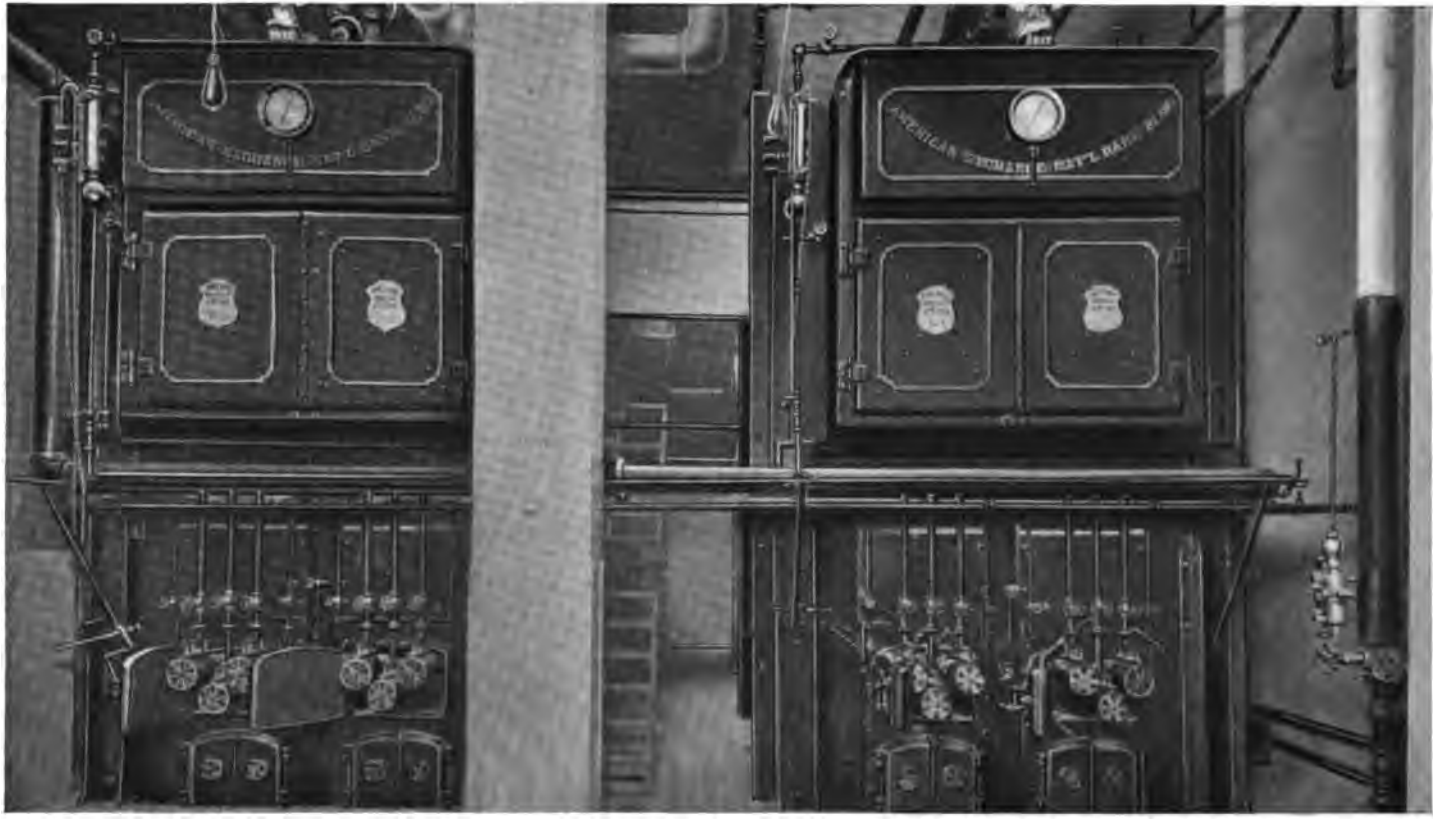

Two Standard Heine Boilers equipped with Natural Gas Burners in the American Exchange National Bank Building, Dallas, Texas.

Gas Burning

NATURAL gas, blast furnace gas, coke oven gas and producer gas are the four principal types of gaseous fuels which are available for use under steam boilers.

NATURAL GAS: Natural gas is probably the most widely used of the four principle gases, although the depletion of the natural gas fields is now so rapid, that its utilization is being rapidly curtailed.

Representative analyses of natural gas from various locations are given in Chapter 13 on FUEL.

The design of a boiler furnace for burning natural gas involves several important points. First, the furnace volume or combustion space must be proportioned so that the gases will not come into contact with the cool heat absorbing surface until combustion is completed. A furnace volume of about 2 cu. ft. per rated horsepower will give sufficient combustion space to meet the above conditions. The standard Heine boiler, with its arrangement of horizontal baffling on the lower row of tubes, gives a furnace volume particularly well adapted for the burning of natural gas. Dutch oven furnace construction is not necessary with Heine boilers burning natural gas. Second, in order to prevent laning action of the gases in their passage through the boiler it is more desirable to use a large number of small burners than a few large ones. One burner for 25 to 30 rated boiler horsepower will give satisfactory results. Third, where furnace widths are over 5'0" it is desirable to install checkerwork to act as an igniter for the gases. In some cases one checkerwall placed about three or four feet from the burner outlets is used as an igniter and a second checkerwall, some three or four feet behind the first, acts to break up the flame and mix the gases thoroughly after passing through the first.

Fig. 52 shows a typical natural gas burning setting for a Heine boiler.

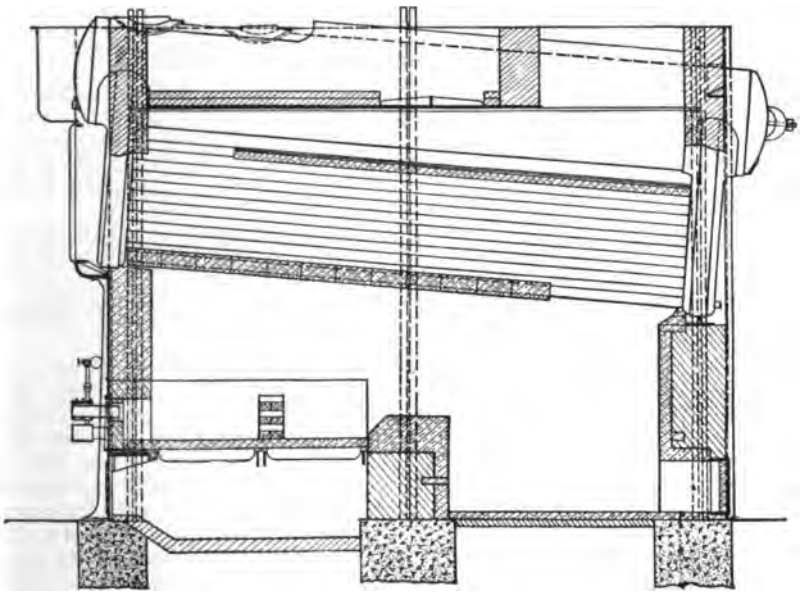

Fig. 52. Typical Natural Gas Burning Setting.

The "Kirkwood" natural gas burner, Fig. 53, consists of an outer and inner casing, and a nozzle. Into the inner casing is driven a large number of small brass spuds which are drilled half way through in two directions. These two holes meeting make a passage for the gas from the annular space between the outer and inner casing into the inner cylindrical space. Here the gas is introduced in a great number of fine jets into the air which is drawn through the burner. Air regulation is obtained by adjusting the front slide.

Fig. 53. End View of Kirkwood Natural Gas Burner.

Due to the fact that the supply of natural gas in certain localities is erratic and uncertain, it is generally the custom to install the burners above coal fired grates or even stokers. The grates or stokers are normally completely covered with firebrick, but in case of the gas supply failing, the bricks can be easily removed, the burner swung out of position and a coal fire quickly started.

BLAST FURNACE GAS or the gas resulting from the chemical reaction in the iron blast furnace, is extensively used for steam generation in the iron industry.

A typical analysis of blast furnace gas is given in the table in Chapter 13 on FUEL.

It is to be noted that this gas is "lean" or low in calorific power, and that the chief combustible constituent is carbon monoxide. These two facts establish the necessity of special furnace design for burning it. The furnace volume required will vary with the quality of gas available and also with the type of burner used. With an inside mixing burner, where the air necessary for combustion is partially mixed with the combustible within the burner shell, the furnace volume need not be as large as when the air necessary for combustion is induced around the burner nozzle. For average conditions the furnace volume should be between 2 and 2½ cubic feet per rated boiler horsepower. With this type of fuel as well as with oil or natural gas, the Heine boiler with its large combustion space is particularly well adapted for efficient and high capacity operation.

Inasmuch as blast furnace gas contains such a high percentage of carbon monoxide, it is necessary to maintain an auxiliary fuel bed to act as an igniter. Coal fired grates are most commonly used, but stokers or even oil burners are entirely practicable for this purpose.

It is preferable to use washed blast furnace gas for firing boilers, but not absolutely necessary. Where coal fired auxiliary grates are used, the dust precipitated in the furnace from the unwashed gas may be removed when the fires are cleaned. However, this dust when allowed to accumulate becomes fused and is difficult to remove.

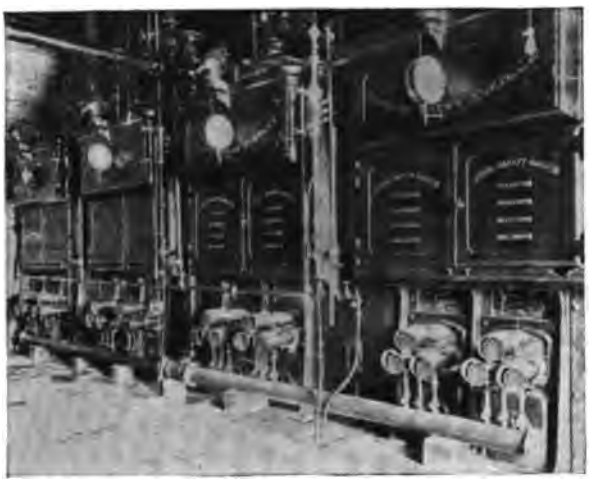

Fig. 54. Kirkwood Natural Gas Burners under Heine Boilers at Chartiers Water Company's Plant, Pittsburgh, Pa.

Due to the fact that pulsations and mild explosions are liable to occur when burning this type of fuel, it is necessary that the settings be particularly well buckstayed. Quick opening, unlatched explosion doors should also be provided in the setting.

Fig. 55 illustrates a Birkholz-Terbeck burner, which is often applied to blast furnace gas-fired boilers. In this burner the primary air supply is admitted through openings in the back of the air nozzle, being aspirated by the force of the gas blowing through the burner. The primary air supply is not sufficient for proper combustion and a secondary supply is drawn in by the furnace draft through the secondary openings around the nose of the burner.

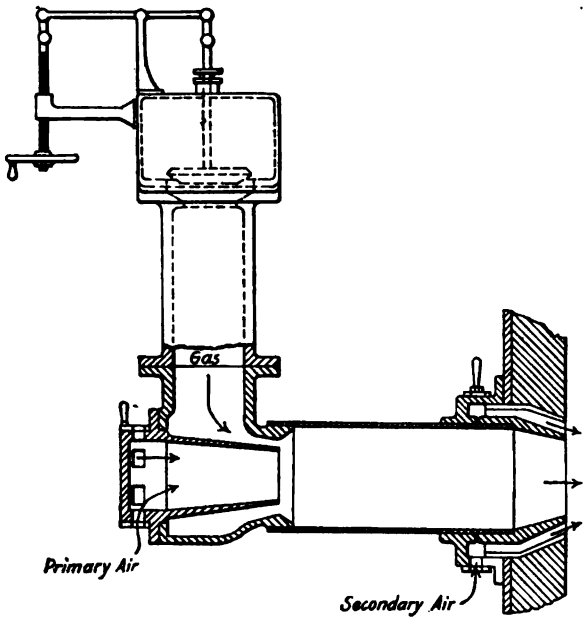

Fig. 55. The Birkholz-Terbeck Burner for Blast Furnace Gas.

Fig. 56 shows a Kling-Weidlein Burner in which the gas leaves the primary nozzle at high speed and in two streams, drawing primary air in between the gas streams. The air mixes with the inside layers of the gas streams on their way to the ignition chamber, but before the latter is reached, the secondary air in two streams is brought in and mixes with the outside layers of the gas.

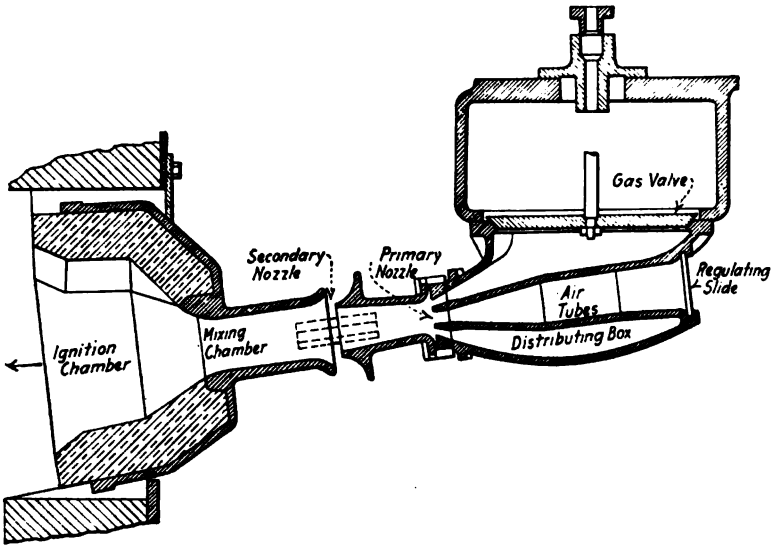

Fig. 56. The Kling-Weidlein Blast Furnace Gas Burner.

In the Bradshaw-Fraser Burner, Fig. 57, the aspirating action of the blast furnace gas which has attained high velocity as a result of the constricted passage is used to draw in air through an internal connection.

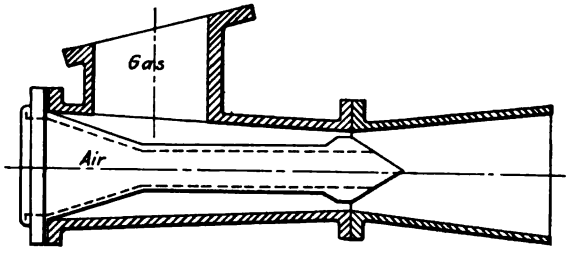

Fig. 57. The Bradshaw-Fraser Gas Burner.

PRODUCER GAS has but a limited use under boilers, and for the sake of economy it should be used only in an emergency. A representative producer gas analysis is given in Chapter 13 on FUEL, and it will be noted that in calorific power and in percentage of combustible it resembles blast furnace gas.

COKE OVEN GAS is a product of the destructive distillation of coal as carried out in the by-product coke oven. This gas has a relatively high calorific value, as is indicated by the analysis given in Chapter 13 on FUEL. In general, the proper methods of burning this fuel are the same as for natural gas. However, as this gas may contain tar, which has not been entirely removed in the scrubbing process, it is necessary to have the gas lines and burner pipes arranged for easy cleaning.

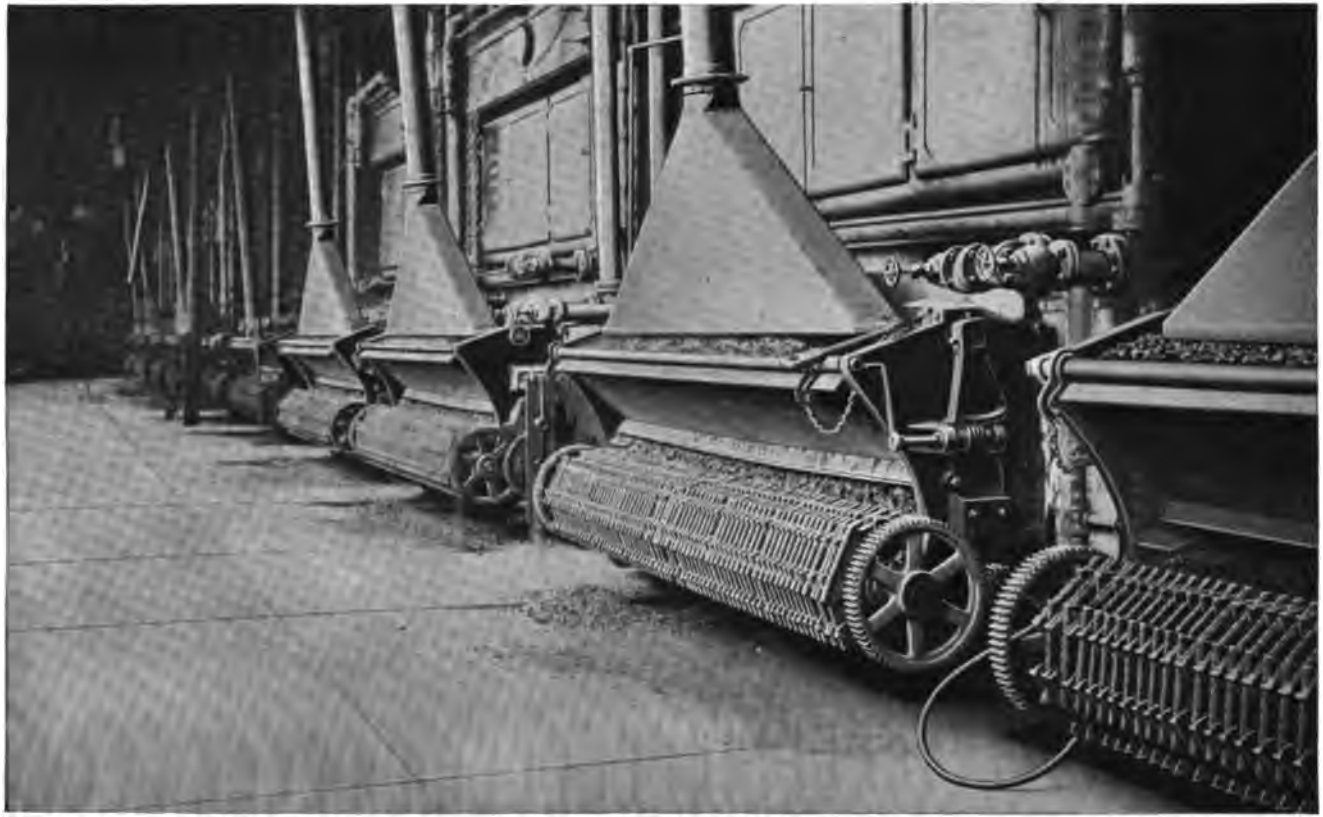

7000 H. P. of Heine Standard Boilers set over Green Chain Grate Stokers in the East St. Louis & Suburban Railway Co., East St. Louis, Ill.

Settings for Burning Refuse

WOOD chips, shavings, sawdust, and other refuse from sawmills or industrial processes require a boiler furnace in which a large mass of fire-brick is continuously radiating heat to the fuel and evaporating the moisture from it.

In the Heine boiler, a semi-extension or Dutch oven, Fig. 58, meets the requirements of *wood refuse or tan bark*. The thickness of the fuel-bed carried on the grate depends upon the size and nature of the fuel, as well as upon the quantity of air that the available draft can draw through the bed. A long flame is produced by the burning fuel, but it is prevented from coming in contact with the tubes of the boiler by the baffle tiles lying horizontally on the bottom row. As wood refuse generally contains a large amount of moisture, a considerable percentage of the total heat is consumed in evaporating the water from the fuel.

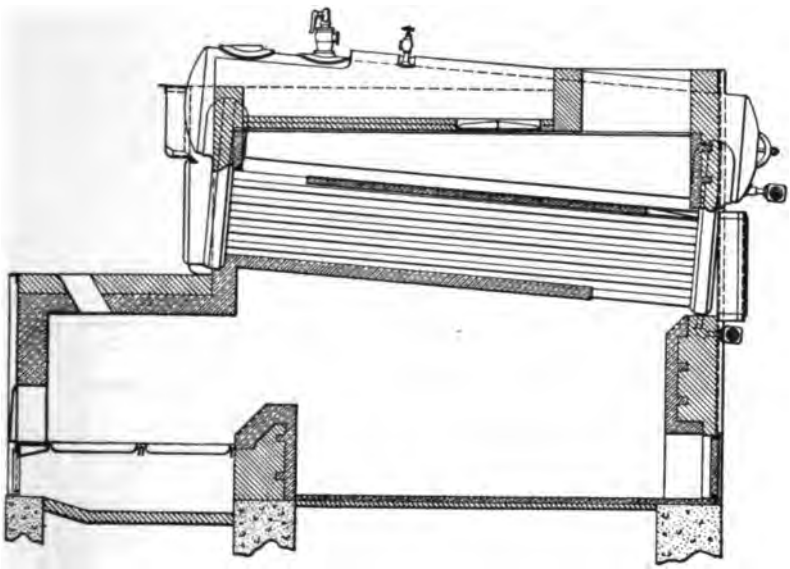

Fig. 58. Setting with Semi-Extension Furnace for Burning Wood Refuse or Tan Bark.

Fig. 59 shows a method of firing when the wood-refuse is brought to the boilers by pneumatic conveyors, the fuel being deposited in the cyclone separator and fed to the boilers through 10 or 12 inch galvanized sheet iron piping to burners discharging over the fuel bed. These burners are usually attached to a length of pipe, the upper end of which is carried by a ball joint, and the lower end latched to the burner. Y-branches or switches allow of one cyclone separator feeding several boilers. The piping from the separator should not slope more than 30° from the vertical.

If dry chips and shavings are to be fed to the furnace, or if a *mixture of wood and coal* is to be burned, the resulting high temperatures may burn the firebrick. But if the amount of heat absorbed directly from the fire is increased by the use of the standard setting, Fig. 60, the furnace temperature will remain normal. The necessary cooling effect is obtained by the arrangement of the baffles. Near the front header the underside of the tubes is

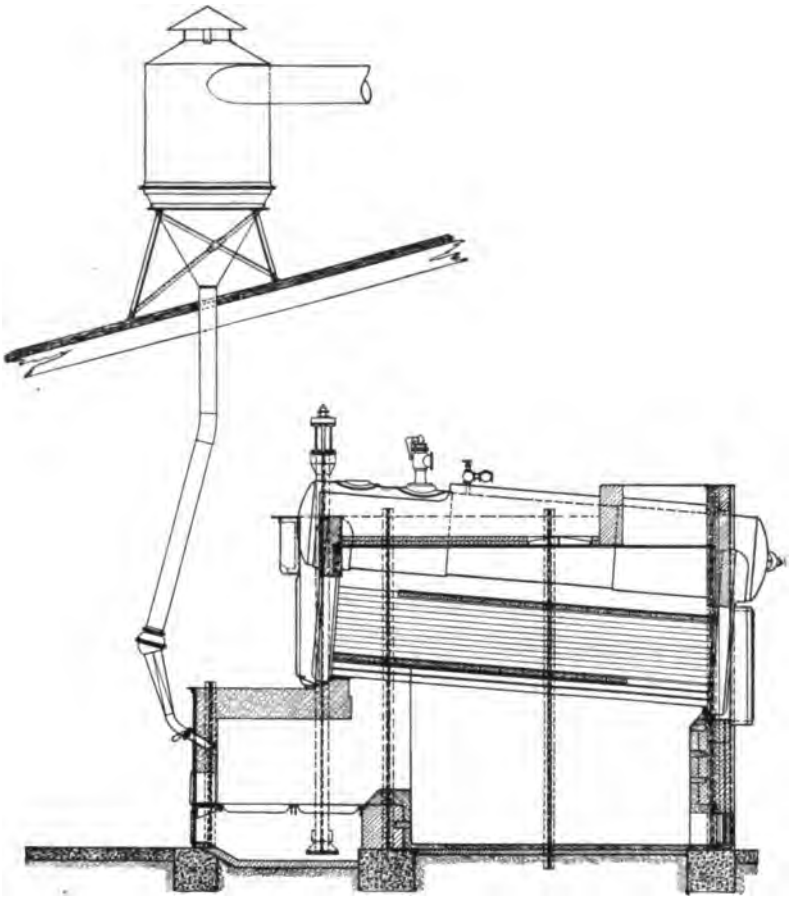

Fig. 59. Burning Wood Refuse Carried by Pneumatic Conveyors.

exposed for a short distance, while the rest of the first row of tubes is encased in baffle tile. The gases are directed upward against the tile roof. then over the top of the wall and under the deflection arch. The air and gases are thoroughly mixed and smoke formation prevented.

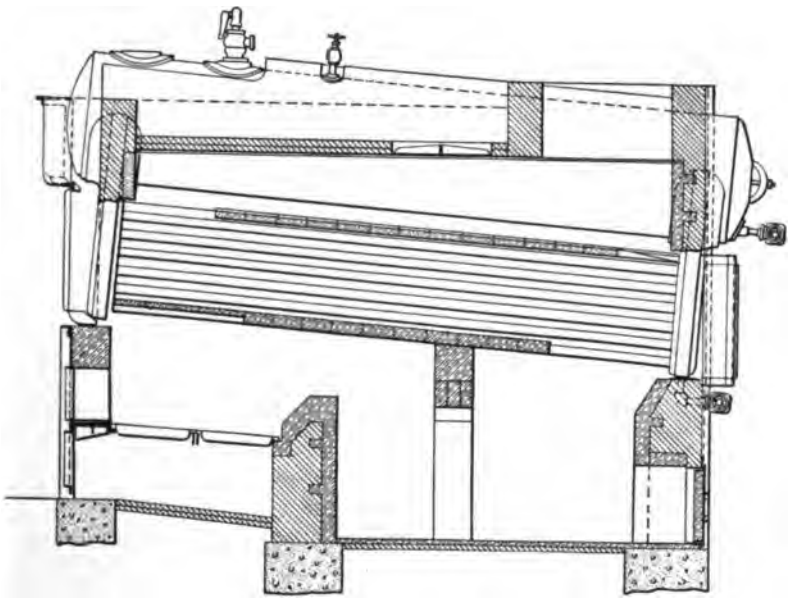

Fig. 60. Setting for Burning Coal and Wood Mixture.

1500 H. P. of Heine Standard Boilers equipped with McKenzie Chain Grate Stokers in the Lytton Building, Chicago, Ill.

For burning *bagasse* a special extension furnace is required for combustion. These wet fuels should be burnt on hearths at the bottom of high reverberatory chambers as shown in Figs. 61 and 62. The raw material is fed in from the top, and is dumped directly onto the fire, so that the fuel bed is generally in a thick pile. The necessary air is brought in through the tuyeres under light pressure. Combustion is completed in return flues, which carry the gases to the boiler.

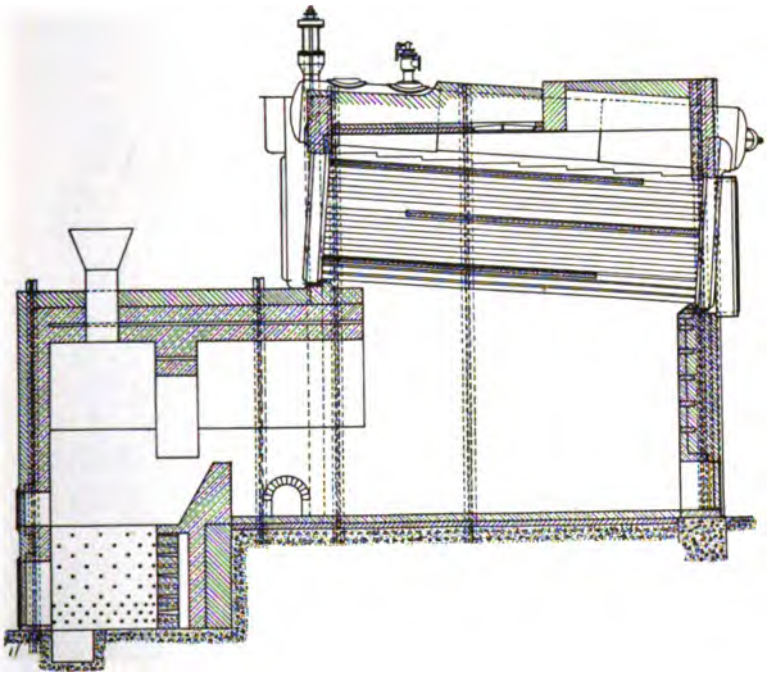

Fig. 61. Preferred Setting for Burning Bagasse.

Oppositely inclined grates converging downwards may be installed near the bottom of the furnace. These can be automatic or hand-operated. One furnace can be used for two boilers, by setting it between them.

Whitehall Cement Mfg. Co., Cementon, Pa., 3440 H. P. of Heine Waste Heat Boilers.

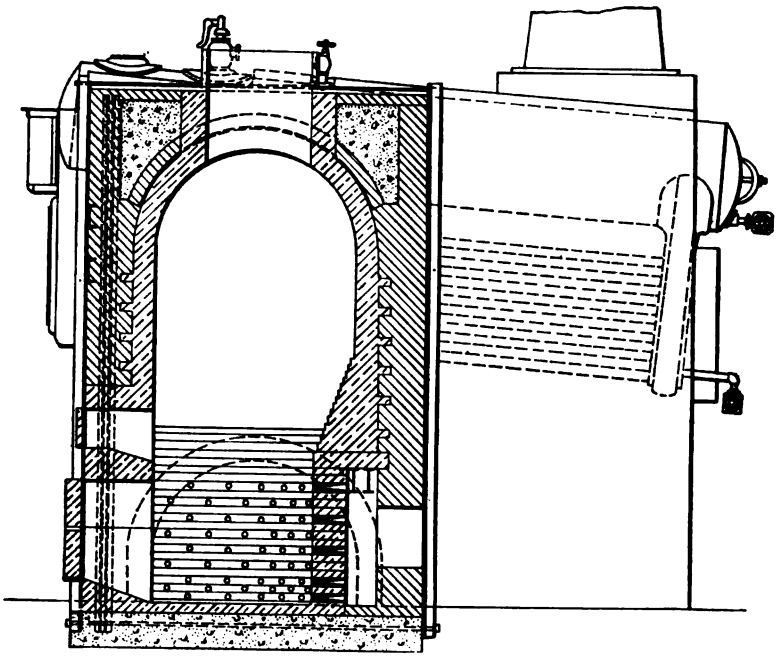

Fig. 62. Alternative Settings for Burning Bagasse.

Waste Heat Settings

CERTAIN manufacturing processes depending on the direct combustion of fuel are inherently inefficient when considered from a thermal standpoint. The term efficiency, as applied to these various processes, has the same significance as it has when applied to the operation of a direct fired steam boiler. In boiler practice the object is to utilize every available B. t. u. for the generation of steam; but there are certain unavoidable heat losses of which the greatest is the heat carried away by the stack gases.

In some industrial burning operations the thermal efficiency is not above 40 per cent. That is to say, the number of B. t. u. actually utilized in the melting, smelting or treatment of the material involved, is only 40 per cent of the number of B. t. u. actually supplied to the furnace as fuel. In these operations, as in steam boiler practice, the largest thermal loss is the heat carried away by the waste or stack gases.

In order to increase the efficiency of the primary furnace, waste heat boilers are installed, which generate steam for plant use. This steam is a direct saving. With the ever increasing price of fuel, the installation of waste heat boilers is decidedly advisable wherever conditions permit.

Cape Girardeau Portland Cement Co., Cape Girardeau, Mo., containing 1410 H. P. of Heine Waste Heat Boilers.

The operation of the following types of furnaces with their relatively low thermal efficiencies, is in general such that waste heat boilers can be profitably installed.

Open Hearth Steel Furnaces.
Rotary Cement Kilns.
Puddling Furnaces.
Malleable Iron Melting Furnaces.
Forge Heating Furnaces.
Bee Hive Coke Ovens.
Coal Gas Benches.
Oil Stills.
Zinc, Copper, Nickel, etc., Refining Furnaces.
Soda Ash Furnaces.
Glass Melting Furnaces.

Waste heat boilers cannot be conveniently installed with every such furnace, because raw materials, fuels and operating conditions differ so widely that each proposed installation requires individual study to determine the feasibility of a waste heat boiler installation, and the best method of its application.

Inasmuch as the temperatures of waste gases available for waste heat boilers vary from below 1000° F. for long cement kilns up to 2200 for melting furnaces, it is obvious that there can be no set or standard proportion of boiler heating surface. With gases around 1000° F. the heat transferred to the boilers by radiation is almost negligible and the steam is generated principally by convected heat. Where the gases are at temperatures above 2000° F. the radiation is appreciable, approaching that of a direct-fired boiler. Hence a boiler for high temperature waste heat work varies but little in design from a standard direct-fired unit.

The majority of waste heat boilers in service are utilizing gases at temperatures ranging from 1100° to 1600° F. In this class steam is generated by convected heat and therefore the arrangement of heating surface and baffling departs materially from the standard for direct-fired work.

The transfer of heat by convection follows certain laws, of which cognizance is taken in the design of Heine waste heat boilers for relatively low temperature work. As early as 1874 Professor Osborn Reynolds developed a law of convection, which has been later substantiated by such investigators as Nicholson, Jordan, Stanton and Fessenden. This law states that the rate of heat transfer bears a certain definite relation to the velocity with which the gases sweep over the heat absorbing surface. Or stated in different words—the B. t. u. transferred per square foot of heating surface per hour per degree difference in temperature between gas and water increase with increasing gas velocities. Therefore, in a waste heat boiler of the convected heat type, in order to obtain a satisfactory rate of heat transfer and to keep the heating surface within reasonable limits, the gas velocities employed are considerably higher than in direct-fired practice.

The first modern high gas velocity waste heat boiler was a standard Heine boiler installed in 1910 by C. J. Bacon at the South Chicago Works of the Illinois Steel Co. The gas velocity in this boiler was equal to 5300 lbs. of gas per square foot of gas passage area per hour, and established the high limit up to the present time.

High gas velocities, which generally run from 2500 to 4500 lbs. of gas per hour per square foot of average gas passage area, are obtained in the Heine waste heat boiler by various methods of baffling. In instances where the gases are comparatively free from dust, horizontal baffling is employed. This is easily installed and replaced, and readily rearranged, should it be desired to increase or decrease the gas velocity in order to alter the rate of heat transfer.

In instances where the gases are burdened with dust, which would accumulate on horizontal baffles, there are employed other methods of baffling which maintain a high gas velocity and allow the dust to fall clear of the tube bank. Several different types of baffling are used in Heine waste heat boilers, and these make such a variety of possible arrangements that no typical illustration can be given. The dust falls into hoppers built integral with the setting and equipped with air tight cleanout doors.

Due to the high gas velocity employed, there is an unusually high draft loss through the boiler, which is taken care of by induced draft fans. Fans have a steadying effect on the draft at the primary furnace, and when so desired the draft at the furnace may be increased with increased furnace output. It is desirable that the fans be driven by a variable speed motor or steam turbine, so that any variation in the quantity of gas may be satisfactorily handled.

In plants where the temperature of the waste gases approaches that of direct-fired practice, or where the conditions do not warrant the expense of an induced draft fan installation, it is customary to use a single pass waste heat boiler and to employ natural draft. The boiler is then very similar in design to a standard direct-fired unit.

It is generally preferable to install waste heat boilers in connection with continuously operated furnaces. If the furnace is operated only part of the time, it is customary to install auxiliary grates under the boiler and to fire coal directly, when the boiler is not being supplied with waste heat from the furnace.

The necessity of having tight settings is continuously brought to the attention of direct-fired boiler operators; but in waste heat utilization this requirement is even more important, for there is a greater vacuum in waste heat settings, and hence a greater tendency for air leakage through crevices in the brickwork, around loose doors, etc. The waterleg construction of the Heine waste heat boiler is such that one continuous surface is presented at both the front and rear of the setting. There are no separate headers and therefore no crevices to caulk with asbestos rope, which quickly becomes brittle, often drops out, and thus increases the air leakage. The soot blower elements project through the hollow staybolts of the front and rear waterlegs, so that it is not necessary to place dusting doors in the side walls. The fewer the openings in the setting brickwork the more durable it is and the less the tendency for air leakage. All cleanout or access doors should be provided with gaskets to insure tight closure. Steel casings for waste heat boiler settings are not altogether satisfactory, because cracks are likely to develop in the brickwork, and being inaccessible behind the casing are hard to detect and repair. Asphaltic compounds suitable for painting the exterior of the brickwork are satisfactory for reducing air leakage.

One fact in the design of a complete waste heat boiler installation should be constantly borne in mind,—the operation of the boiler must in no way interfere with the operation of the primary furnace to which it is connected. By-pass flues and dampers must be arranged so that in case something unforeseen happens the gases of combustion can either be passed up the stack or to another waste heat boiler. Where there are two or more boilers utilizing the waste gases from two or more furnaces, it is desirable, where space or operating conditions permit, to arrange one common flue into which the waste gases from all furnaces discharge, and from which branch flues lead to as many boilers as are necessary to handle the gases satisfactorily. With this arrangement the dampers can be placed so that any desired flexibility of operation is obtained.

Marine Settings

IN shipping practice boilers of compact design and light weight are required so that the cargo capacity will be a maximum. Only water-tube boilers fulfill these requirements.

For *cargo carriers* and other steamships, boilers, Fig. 63, are supported by a steel structure secured to the framing in the vessel. On this structure is a steel-plate casing, which encloses the entire setting. Inside of the casing is insulating material, faced with firebrick. This construction insures protection against high temperatures and minimizes the radiation and infiltration losses.

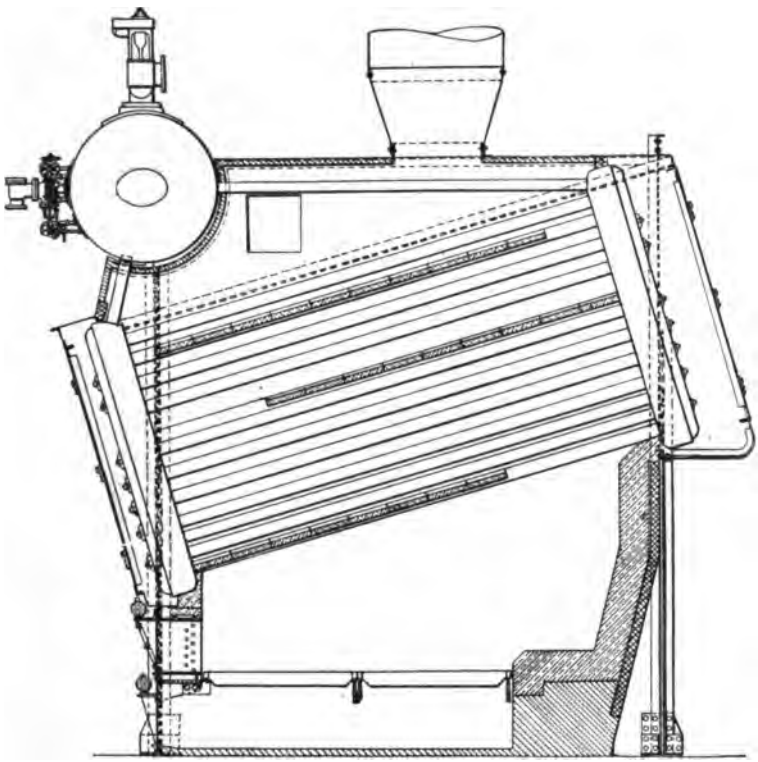

Fig. 63. Heine Marine Cross Drum Boiler.

For *dredge boat* service, the setting is built up of firebrick, hollow tile, asbestos and sheet iron. All parts of the furnace interior exposed to high temperatures are lined with firebrick. Back of this is the tile, which is

Front View of Marine Casings for a Battery of Two Heine Cross Drum Marine Boilers.

Rear View of Marine Casings for a Battery of Two Heine Cross Drum Marine Boilers.

covered with asbestos on the outside. The sheet iron encases the entire setting, as shown in Fig. 64. The boiler itself is carried on steel supports at the front and rear, while the breeching and stack are carried by structural framing.

Separate Heine publications dealing with marine boiler practice are sent on request.

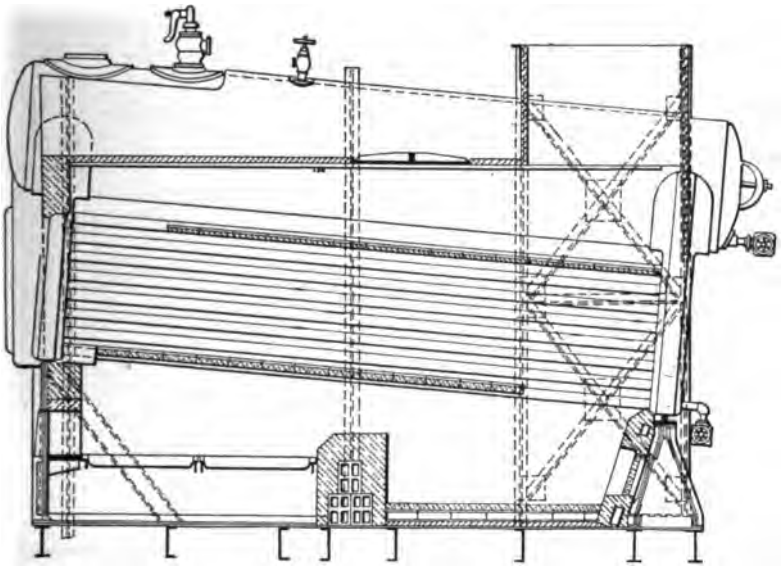

Fig. 64. Heine Dredge Boat Boiler Setting.

Boiler Setting Requirements

THE essentials of a boiler setting are a firm foundation, proper distribution of brickwork and steel supports, adequate furnace and ashpit space, and insulation against heat losses. The furnace proper and masonry parts included in the furnace should be made of materials that will stand severe service and high temperature with the least maintenance. The refractory material should be combinations of fire-clay, or else special firebrick.

The boiler must be supported on a solid base to prevent settling and cracking of the walls. A weak base may impose severe strains upon the boiler piping, resulting in sprung and leaky joints and ruptured connections.

The soil is the determining factor in proportioning the foundation. In soft ground under a large boiler, it may be necessary to drive piles or to lay a concrete base at least 2 ft. thick over the entire space occupied by the setting. The walls are started on this base or a concrete foundation with footings is laid to receive the brick and steel structure. The depth of foundations and width of footings then depend upon the size of boiler.

The side and end walls of a boiler setting should not be less than 12 in. thick. In older designs, a 2-in. air space was generally provided. It was thought that the double wall prevented heat losses and also cracking due to expansion. Tests by the *U. S. Geological Survey* indicate that an air space is of little value in setting walls. The radiation losses appear to be greater for a wall with an air space than for a solid wall, especially if the air space is near the furnace side.

Two Heine Standard Boilers with Dredge Boat Setting.

While concrete has been used in several installations, the walls of the setting, as a rule, are made of well-burned red brick. These should be laid true and in high grade mortar, consisting of a thorough mixture of one part Portland cement, three parts unslaked lime and sixteen parts of clean sharp sand. Each brick should be solidly imbedded and the joint fully filled.

Ordinarily, the furnace, ashpit, bridge wall, arches and floor of the combustion chamber are built of red brick. All parts of the brickwork in contact with the hot gases or exposed to the flame, should be faced with or else built entirely of firebrick capable of withstanding the high temperatures.

The firebrick should be highly refractory and should be mechanically strong and sound so that it will not spall, flake or crumble. Firebrick linings, walls and arches must be given reasonable care. They should be laid in fire-clay mortar having the same properties as the brick itself. Fluxing material, such as lime, should not be used in making the joints. Fig. 65 can be used in estimating the number of brick required for standard water-tube boiler settings.

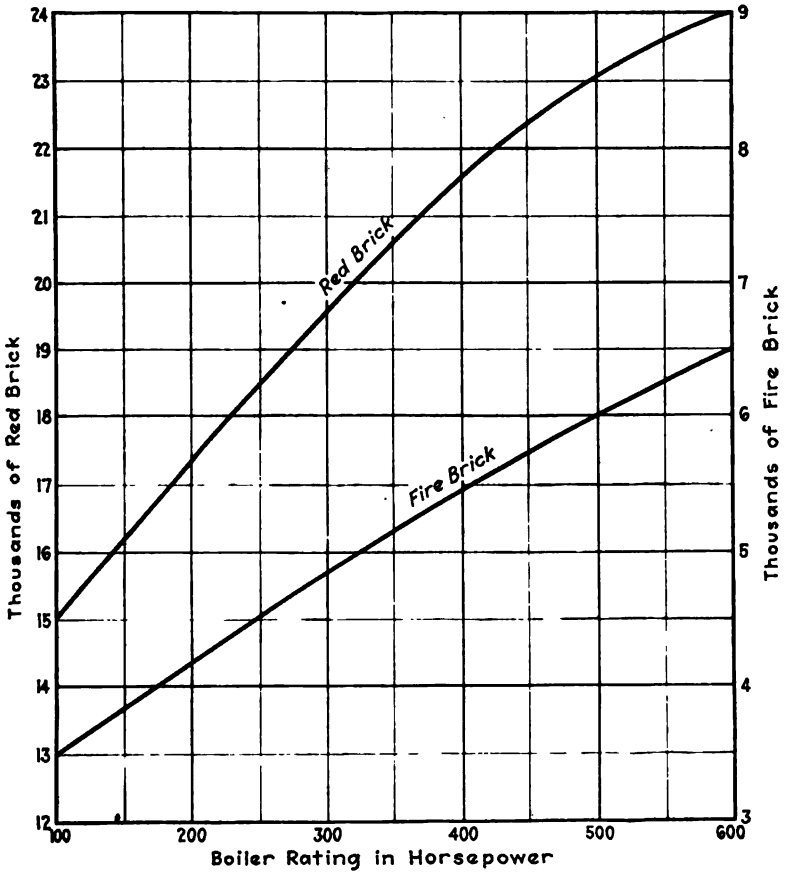

Fig 65. Approximate Number of Brick Required for Standard Heine Boiler Settings.

The furnace construction can be made stronger or more durable by using special blocks in place of the standard firebricks. These blocks are larger and therefore reduce the number of joints required. By the use of a plastic refractory, a one-piece, continuous, monolithic structure can be built up, thus eliminating all joints.

The walls should be strengthened by steel channel buck-stays placed at each end of the setting and at several points along the sides. These should be secured to the walls by longitudinal and transverse anchor rods built into the brickwork. Other structural members are required for the support of the boiler, their number and distribution depending upon the type of setting and the style of furnace.

Refractory Materials

THE refractories used for linings, arches and bridge walls of boiler furnaces must withstand, without serious physical or chemical change, high and changing temperatures, action of flame and gases, and mechanical stresses due to the cleaning and adding of fuel to the fire. The refractories for boiler furnaces consist of bricks, blocks or special forms, and paste. Fire clay (a mixture of silica and alumina) forms the basis of most refractory materials. According to *F. T. Havard,* fire clay is used either alone on account of its admirable qualities of burning to a firm clinker and resisting high temperatures and mechanical abrasion, or it is added to other refractory matter, such as bauxite and magnesia, to lend plasticity.

Fire clays are divided into two classes: flint clay and plastic clay, the former being the harder and more nearly chemically pure. Flint clays are white, gray or mottled black in color. Plastic fire clays vary in color from white to black. including gray, brown and olive. The plastic is added to the flint clay to increase the deformability, generally at the cost of its refractoriness. Commercial fire clay contains many impurities, and the color is not a safe guide to its quality.

Materials such as silica, bauxite, chrome, magnesite and dolomite have melting points higher than fire clay, but have not proved satisfactory in boiler practice. These materials do not withstand sudden heating, cooling, pressure, and action of the gases and ash.

The conditions that obtain in a coal furnace, according to *Wm. A. Heisel,* are not favorable to the long life and general use of silica brick. With an oil or gas flame they give good service, as far as chemical action goes, but the extreme temperature variations due to sudden starting or stopping cause rapid physical destruction through spalling or the breaking off of large pieces.

Bauxite brick, according to *A. D. Williams,* cost two to three times as much as fire clay or silica brick. They are hard and tough, cinder does not stick to them; and they last longer than silica brick when exposed to slag action. However, bauxite tends to spall and break off when suddenly chilled.

At high pressures and temperatures *chrome and magnesite brick* cannot withstand the strains of sudden heating and cooling, so that they have not found favor except in some metallurgical operations.

Fire Brick

PLASTICITY, according to *L. S. Marks,* is considered the main factor in selection of fire brick. It indicates the tendency of a brick to become plastic at a temperature lower than its melting point and to become deformed under a given load. Under a unit stress of 100 lb. per sq. in., the plastic point should be more than 2400 deg., otherwise the brick is not suitable for boiler furnaces.

Fusing point is the temperature at which fire brick will fuse. A high value ordinarily indicates that the critical temperature, or that of plasticity, is correspondingly high.

Expansion represents the tendency of the brick to change in size with change in temperature. Lineal expansion of from 0.01 to 0.08 in. in a 9-in. brick is the permissible limit for furnace construction.

Compression is measured by the strength or load necessary to cause crushing at the center of a 4¼-in. face, by a steel block 1-in. square.

Hardness indicates the brittleness of brick and its tendency to crumble; it is ordinarily estimated on an arbitrary scale of 10.

Ratio of nodules expresses the percentage occupied by flint grains in a given volume. The scale is: high, 90 to 100 per cent; medium, 50 to 90 per cent; low, 10 to 50 per cent.

These nodules are the average size flint grains found in a carefully crushed brick. Small nodules are the size of anthracite rice; large nodules are the size of anthracite pea.

These characteristics are summarized in Table 6, for the three classes of *first-grade or No. 1 brick.* Class *A* brick are suitable for stoker settings operated at high overload or for other extremes of operation. Class *B* brick are used for furnaces of stoker-fired boilers operating at normal load, and for hand-fired boilers under overloads. Class *C* brick are recommended for standard boiler settings, for occasional short overloads.

Table 6. Properties of Commercial Fire Brick

Characteristics	FIRST GRADE (No. 1)			No. 2 Grade
	Class A	Class B	Class C	
Safe Fusion Point, deg..	3,200–3,300	2,900–3,200	2,900–3,000	2,400–2,700
Compression, lb. per sq. in.....	6,500–7,500	7,500–11,000	8,500–15,000	14,200–32,000
Relative Hardness.....	1–2	2–4	4–6	6–10
Size of Nodules.....	medium	medium to medium large	medium to large	small to very small
Ratio of Nodules.....	high	medium to high	medium low to medium	low to very low

The figures in Table 6 indicate that the better the brick the softer it is. It should not be any harder, therefore, than is required for the necessary strength. The unequal expansion and localized stresses due to sudden temperature changes often cause failure when the fire brick is hard and brittle.

The *melting temperatures* of refractory brick, as determined by *C. W. Kanolt,* are given in Table 7. The temperatures do not indicate the fitness of the material for use in boilers, because the erosion, crushing strength, ability to withstand sudden load changes and to resist fluxion, must all be considered. In stoker-fired boilers temperatures of nearly 3200° F. have been obtained, although the melting point of chemically pure fire clay is only 3326 degrees.

Table 7. Melting Points of Fire Brick

Brick	Temp., Deg.
Fire Clay	2,732–3,182
Silica	3,092–3,182
Magnesia	3902
Bauxite	2,912–3,272
Chromite	3,722

A simple quality test is made by breaking the brick. In a low grade brick the fracture will be fine and uniform, like bread. In a better quality brick the surface is open, clean, white and flinty.

Fire brick 9-in. long are considered standard. Manufacturers carry a stock of the shapes and sizes shown in Fig. 66. Special sizes can sometimes be purchased from stock, but usually have to be made to order.

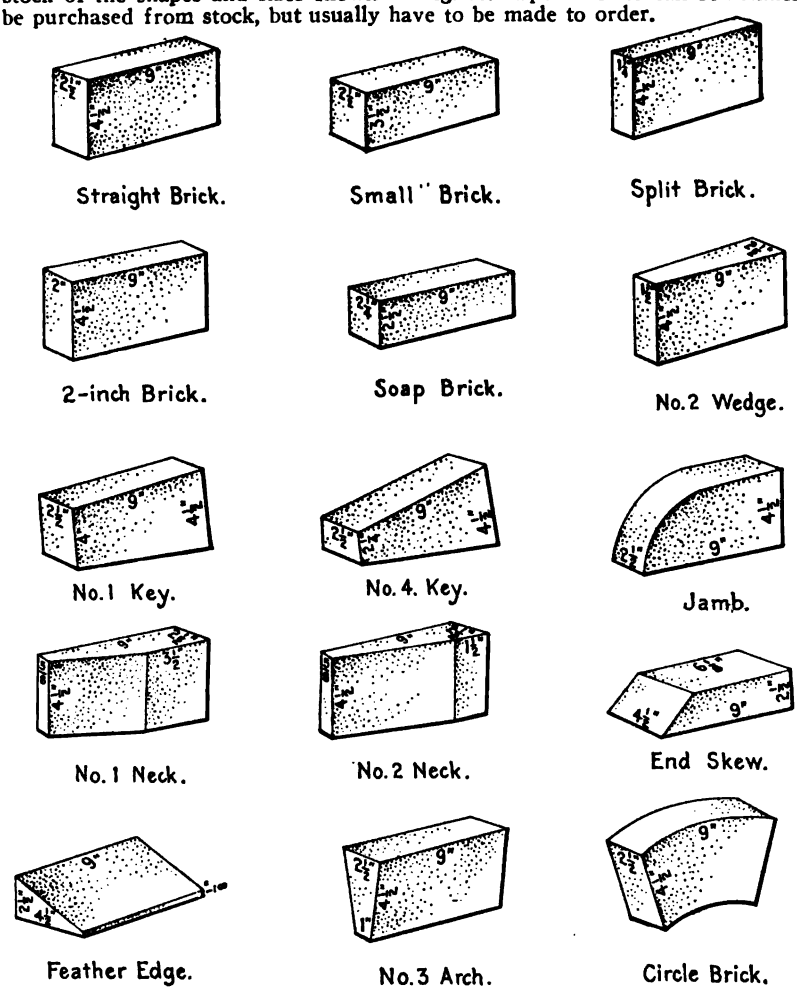

Fig. 66. Some Standard Fire Brick Shapes.

Table 8 gives the weight of different refractories, as brick and as mortar.

Table 8. Approximate Weights of Refractories

Material	Brick, Lb. per Cu. Ft.	Mortar or Cement, Lb. per Cu. Ft.
Common Clay	100	78
Fire Clay	150	85
Silica	128	75
Chrome	175	135
Magnesia	160	127
Plastic	120 (Solid)	....

Influence of Ash. Refractory materials may deteriorate because of the chemical action of the fused ash and of the gases. Certain constituents of ash, according to *E. G. Bailey,* influence the fusibility of the fire brick. In one installation, where the furnace lining gave trouble, the fusing temperature of the fire brick was 3100 deg., and that of the ash was 2600 deg.; the chemical action of the combination caused fusion at 2400 degrees. Ash from other coals would not have melted the fire brick used; other brick and the same ash might not have so materially affected the melting point.

Mortar and Cements. Many arches and walls seem to have failed because the mortar used in making the joints melts and allows the brick or blocks to fall. The mortar used should be of practically the same composition as the brick itself. For fire clay brick, finely ground fire clay mortar should be used; silica cement for silica brick; and magnesia cement for magnesia brick.

The fire clay mortar should be of the first quality, otherwise it will melt and run long before the brick. Common sand, salt, or lime, hasten fusion, and cement the brick thoroughly, but at high temperatures this fusion destroys the brick prematurely. Tests by *Raymond M. Howe* show that the addition of only 5 per cent of Portland cement, asbestos or salt lowered the fusion point of fire clay almost 400 degrees. On the other hand, *fire sand,* which is calcined clay or fire brick in powder form, can be added to the mortar and prevents shrinkage of the raw clay and crumbling of the joints. This shrinkage can be prevented, and a firmer joint established, not by adding foreign materials to the fire clay, but by using the same material, taking the precaution, however, that a certain amount of clay has previously been shrunk.

Several commercial cements withstand temperatures as high as 3100 deg., and are recommended for use with high grade fire brick.

The trend of opinion favors furnace walls of as few different materials as possible; these must be selected carefully, even though solid fire brick are to be used. The use of two grades of brick, rather than one, may be preferable and economical, especially as the burden on side walls and on an arch is different. Side walls for coal fuel, states *Heisel,* generally require a refractory less porous and soft than would be used in an arch, to withstand the abrasion caused by the fire tools, and the cutting caused by breaking or removing the clinkers.

Furnace walls are safeguarded and the lining preserved by devices which supply air to the walls and thus prevent clinker from adhering to them. This reduces the temperatures without reducing the furnace efficiency. Perforated refractory blocks, Fig. 67, are used for the lining in the lower parts of the side walls, bridge walls, and wherever the action is most severe. Air is admitted through holes in the wall blocks. The holes are connected by ducts to the fan draft system. With underfeed stokers, these blocks may materially increase the life of the linings.

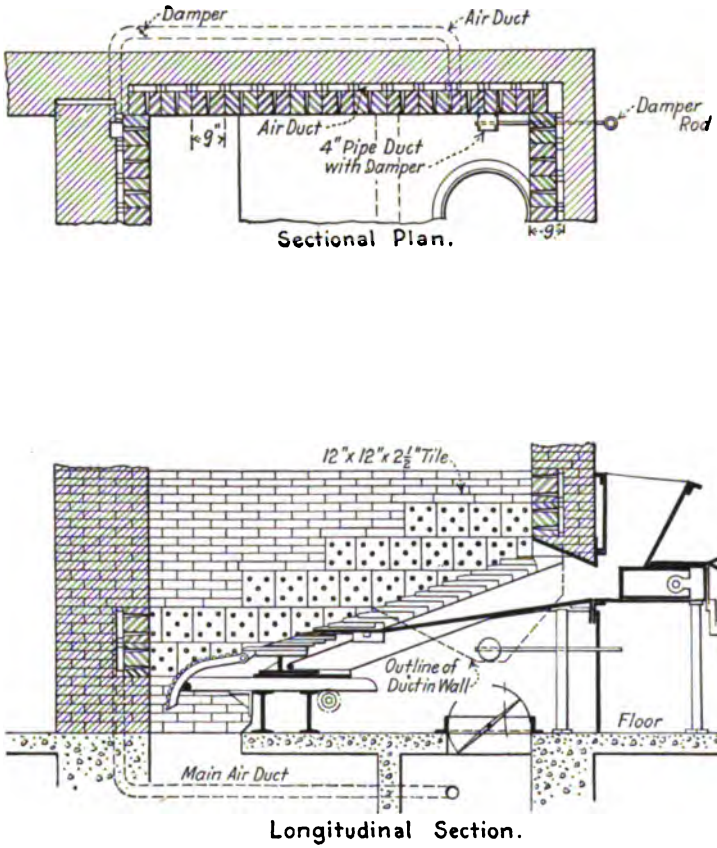

Fig. 67. Refractory Blocks for Ventilating Furnace Walls

With standard brick the joints and parts to lay are so numerous that blocks are made for door arches, furnace walls, and bridge walls. The blocks are keyed or have a tongue and groove, and sometimes are machined to insure a good fit. It is said that one 24-in. block takes the place of 40 standard brick, and reduces by more than two-thirds the running inches in the joints in the face of the wall.

In place of the blocks, so-called plastic fire brick is used for boiler settings. This is a moist plastic mass, compounded of fire clays mechanically treated so that expansion is practically eliminated. The plastic refractory is placed by hand and pounded so that the front arch, side and front walls, bridge wall, or combustion chamber lining is one continuous structure. This material, it is said, does not break or spall under varying furnace temperatures.

Arch Construction. All brick in the same row should be of even shape and thickness, this applying, states *Heisel,* to arches particularly. The variation in size should not exceed ¼-in. in a maximum length of 9 inches. The dry brick selected should be tried over the arch form, and those of uneven thickness should be cut and rubbed to avoid large mortar joints. Wedges should be used to keep the brick bottom in even contact with the arch form. The key course should be a true fit from top to bottom and should be driven from 1 to 1½ in., depending upon the hardness of the brick and the width of the arch.

Suspended flat arches are sometimes used instead of the ordinary sprung arch. Fig. 68 shows a double suspension arch, about 3 in. deeper than the ordinary single arch. A so-called reserve arch is placed above, and supports the lower arch. An air space is provided between the two arches. If a burn-out occurs, the upper arch protects the supporting beams until the boiler can be shut down and the damaged blocks replaced. The new parts are slid into the grooves of the reserve arch.

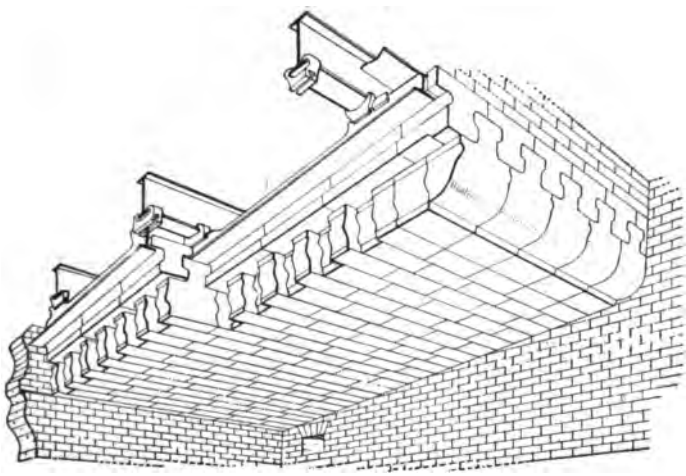

Fig. 68. Liptak Type of Suspended Flat Arch.

Radiation and Leakage

COMMON brick is somewhat unsatisfactory for boiler settings. As it is not a refractory material, it is always protected from high temperatures by a lining of firebrick. It is a poor heat insulator; it is porous and permits considerable infiltration of air, and it cracks easily, especially around openings such as dusting doors, and allows further air inleakage.

Front View of 500 H. P. Heine Standard Boiler set over Westinghouse Underfeed Stoker.

Insulating material will decrease heat loss to a considerable extent. Siliceous insulating material may be cut into blocks of standard firebrick size which have sufficient strength to be laid as a core wall between the fireback furnace lining and the outer red brick course. Such a wall is shown in Fig. 69.

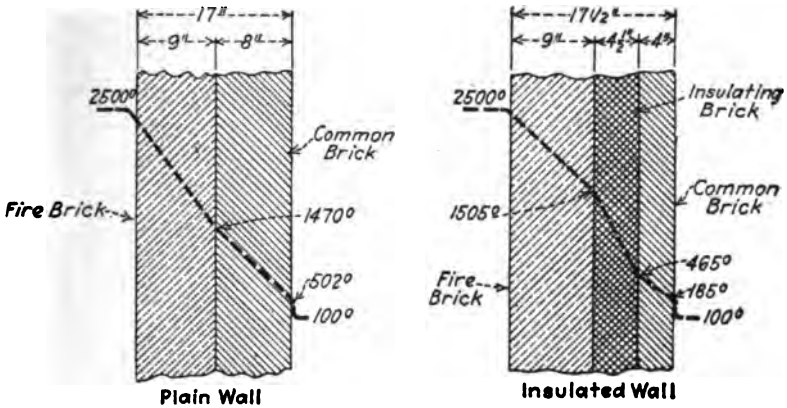

Fig. 69. Heat Flow Temperature Gradients in Brick Wall.

The insulating brick should be at least 4½ in. thick. It should be laid with broken joints and in a mortar made of material having the same characteristics. The temperature drops through a standard boiler wall and an insulated wall are compared in Fig. 69, by *A. L. Gossman.*

Metal wall ties are used in bonding or else firebrick, insulating brick and red brick are tied into a solid wall by brick headers staggered in at intervals.

Fig. 70 shows the thermal conductivities of refractories and insulation, the measurements being made on slabs one inch thick and one square foot in area.

The insulation reduces the radiation loss, but on account of the joints in the brick setting the air leakage is not eliminated. To offset the infiltration only, states *J. Harrington,* a glazed or vitrified brick, laid in cement mortar, gives a hard and durable wall, but the heat transmission is high. A boiler setting encased in sheet steel is practically air tight, but the steel has no insulation value.

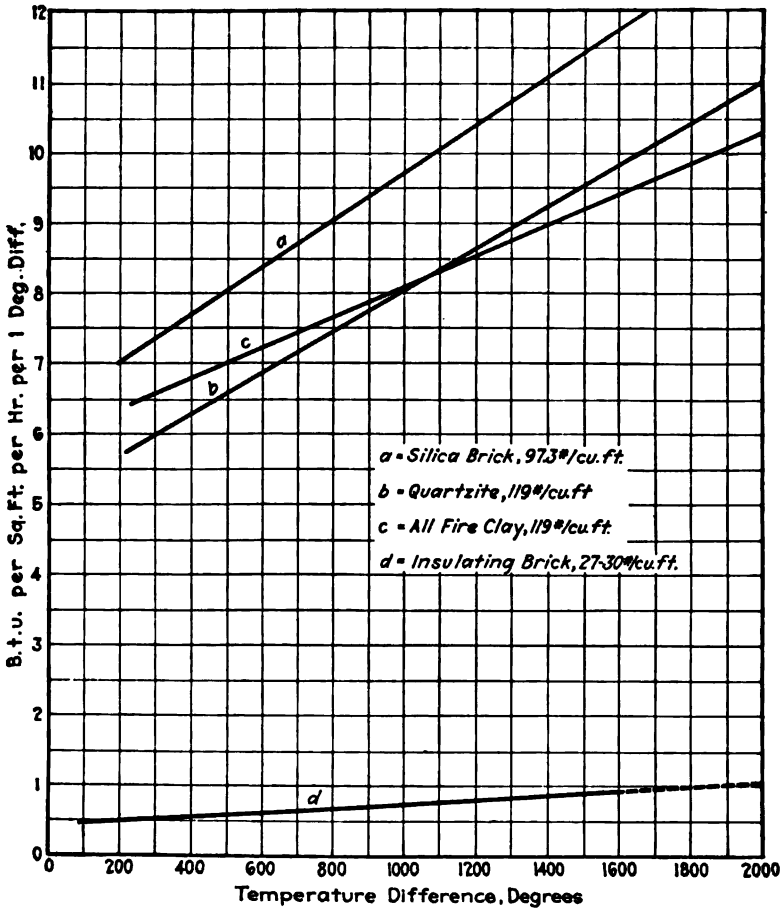

Fig. 70. Heat Conductivity of Brick, One Inch Thick.

Radiation and infiltration losses are both eliminated by applying asbestos or magnesia on the outside of the setting walls, and then encasing the whole with sheet steel. This construction is expensive and carries the objection that cracks in the brickwork are difficult to detect or repair.

A less costly construction, which also reduces both losses, is described by *E. S. Hight.* The details are shown in Fig. 71. The saving effected by this insulation is said to be sufficient to repay the first cost in less than six months, providing the boilers are operated at full load 50 per cent of the time. Wire loops are inserted into the red brick of the setting wall, so that they overhang at every fifth or sixth course. After the wall has been laid up, a $^1/_{16}$ in. finish (two or three coats) of coal tar is applied. This should be boiled to a thin consistency and have asbestos wool stirred into it. After the mixture has dried a plastic asbestos paste or cement is applied to a thickness of about 1¼ inches. Over this a wire mesh is stretched and fastened to the protruding loops by small wire clips. Then another ¾-in. layer of asbestos cement is applied. When the plastic mass is dry, the surface is covered with 10-oz. duck or canvas. This is pasted down tightly and the edges are fastened by wires or metal strips to the steel work of the setting. The duck is finished with two coats of asphalt paint or varnish.

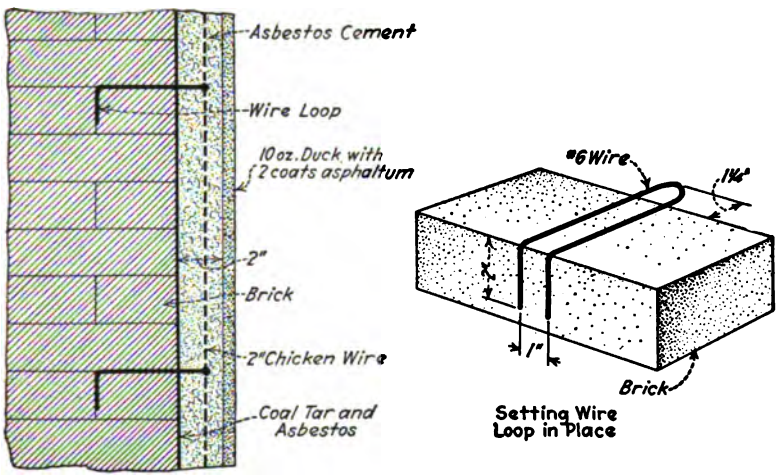

Fig. 71.— Inexpensive Method of Protecting Setting Against Radiation and Infiltration Losses.

For the covering of boiler tops and drums, insulating brick have been found most desirable. This can be strengthened by a course of common brick and then a 2-in. topping of concrete.

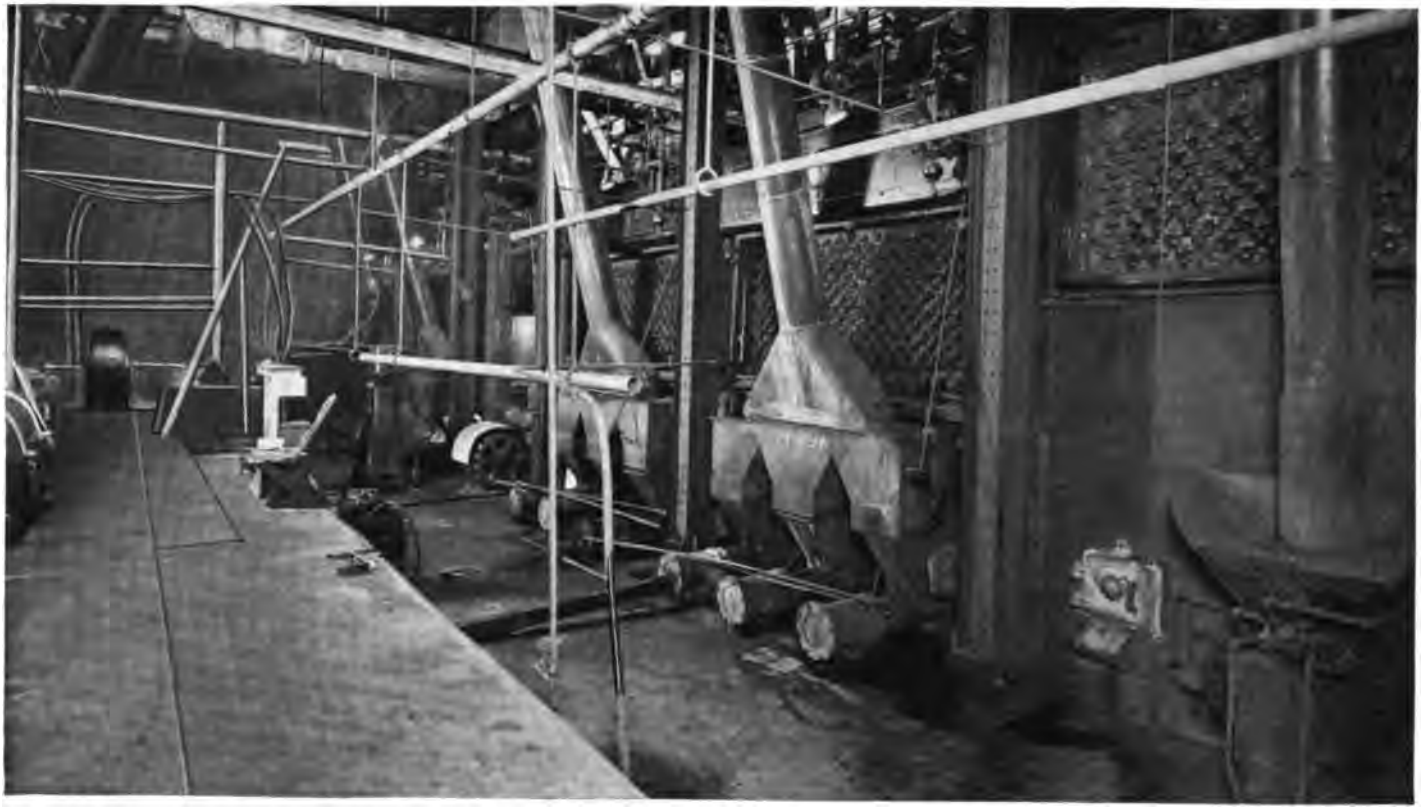

Five 500 H. P. Stoker-fired Boilers. Nearest Boiler equipped with Combustion Engineering Corp. Stoker; remainder with Jones Underfeed Stokers. These Boilers are part of the 5800 H. P. Installation of Heine Standard Boilers at the Pillsbury Flour Mills, Minneapolis, Minn.

CHAPTER 5

MECHANICAL STOKERS

THE advantage of automatic stokers as compared with hand firing lies mainly in the more efficient combustion of the fuel, the elimination of smoke and dirt in the boiler room, and in the ability to drive boilers at high rating. In large plants where automatic coal and ash handling equipment can also be installed advantageously, the use of stokers reduces the labor cost and the labor difficulties. The emission of smoke, except for brief periods, is forbidden in many cities; and when smoke is eliminated, the general efficiency of the boiler plant is usually increased. With stokers the fuel is fed and the air supplied uniformly; no fire doors need be opened to chill the boiler and dilute the stack gases; thus combustion is most thorough even with poor fuel, at combustion rates that produce the highest steaming values. The grade of fuel influences the choice and design of a stoker, but when it is difficult to secure coal from the same source continually, the load conditions are even more important. A plant that must be operated frequently at 300 or 400 per cent of rating must necessarily be equipped with stokers that can be driven at corresponding rates, with forced draft, regardless of the fuel available. When the load conditions are more nearly uniform, the stokers can be of lower forcing ability, and those best suited to the coal available can be chosen.

The following illustrations are given as examples of the types classified.

Overfeed Stokers

IN overfeed stokers the coal is generally burnt on sloping grates. The general position of these is fixed, but reciprocating grate sections gradually work the burning fuel down to the ash receiver. The coal is fed from hoppers adjoining the upper part of the grates and passes first over a coking section, where the volatile gases formed are burned by the aid of secondary air. Overfeed stokers are used with a wide variety of fuels, and boilers are operated up to 200 per cent of rating without overheating the grates.

Cleveland Stoker, Fig. 72. The coal from the hopper is pushed in by feed plates and pokers, so arranged that by increasing the speed of the rectangular feed plates the depth of the fuel bed can be increased. The draft is adjustable for the particular coal used; the three dampers in the wind box below the grates distributing the required air. The entire unit is shipped assembled, and runs on tracks so that it can be removed to gain access to the setting.

Detroit Automatic Furnace, Fig. 73. Coal is fed to the magazines by hand or from chutes, and is driven to the coking plate by pusher boxes, from which it slides down the grates to the clinker grinder, where a supply of exhaust steam softens the clinker. Air for combustion is supplied at a

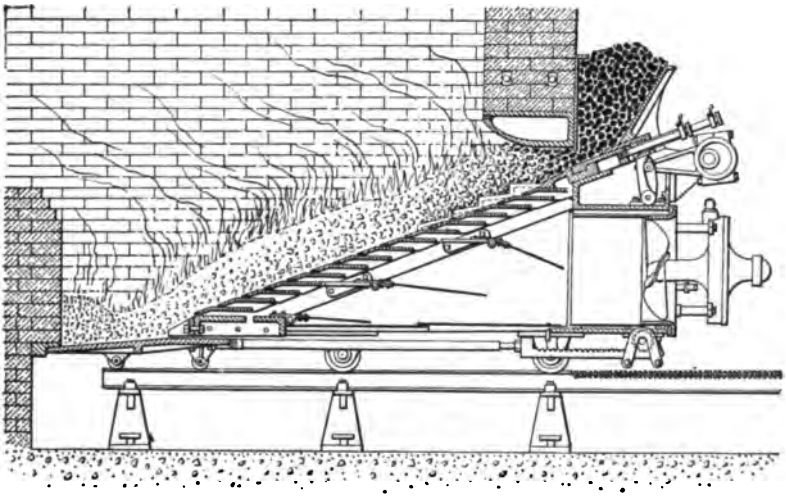

Fig. 72. Cleveland Overfeed Stoker.

number of points—that entering through the upper dampers being heated between the furnace arches and entering the furnace at the arch boxes, in addition to that which passes through the grates.

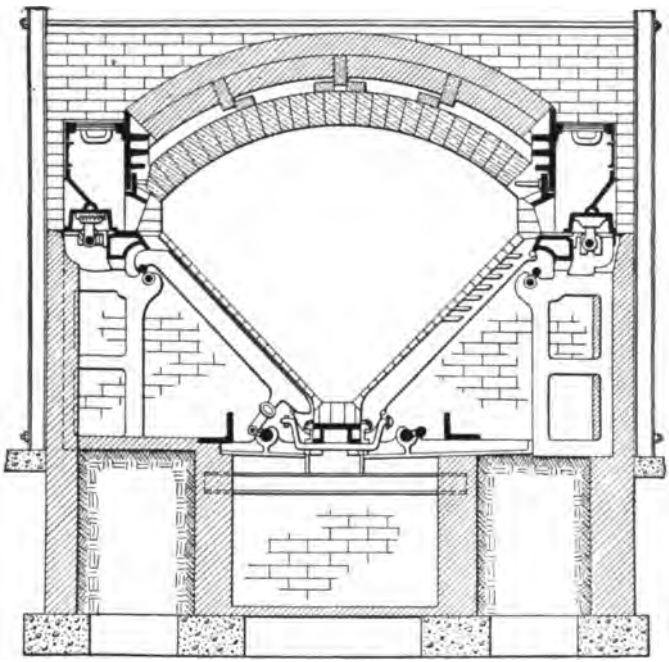

Fig. 73. Detroit Automatic Furnace.

Model Stoker is also of the self-cleaning, side-feed type. The grates slope to the center and are in pairs, set on edge, with a small surface exposed to the fire and a large surface to the cooling action of the entering air. Every alternate grate is movable, the upper end being hinged to the stationary grate, while the lower end is rocked by a moving bar; the burning fuel is moved down by this bar, and the fine ashes are dropped. Both the feed and the speed of the crusher bar at the bottom can be varied to suit operating conditions. The stoker has been used with mine refuse containing 30 per cent of ash. Natural draft can be used, or an induced suction of 0.2 in. at the fire chamber; with 0.4 in. it is claimed that the boiler can be driven at 300 per cent rating.

Westinghouse-Roney Stoker. The grates are horizontal, arranged in steps, and rock backward and forward, gradually passing the coal to the lower part of the slope. The coal is fed to the coking plate at the top by the hopper plate outside, and ignition is helped by the arch above. The guard between the combustion grate and the dumping grate is lifted when the ashes and clinker are dumped. This stoker operates on natural draft, 0.25 to 0.6 in. at maximum load, and has a reserve capacity of 200 per cent of rating. It is used for both high fixed carbon and high volatile coals, at maximum combustion rates of 35 to 50 lb. per sq. ft. per hour.

Wetzel Stoker. Moving coking grates are placed immediately behind the hopper. Main grates extend down to the dumping grates. The bars of the main grates are alternately stationary and moving. The openings in the coking grates are large, supplying air for the combustion of the volatile in the space above; the holes further down are smaller, while those in the lower part of the main grates and in the dumping grate are still smaller, supplying just enough air to burn the remaining solid combustible. For loads less than 200 per cent of rating natural draft is sufficient.

Underfeed Stokers

IN THE underfeed type fresh coal is fed from *below* the fuel bed by some form of pusher, is gradually forced to the upper zone, and toward the ash dump. The fuel bed consists of three layers, a lower one of green coal, next a layer of coal being coked, and an upper or incandescent zone, in which the fixed carbon is consumed and the volatile gases from the coking coal underneath are mixed with air and ignited. The action is similar to that of a gas producer, except that in the stoker the combustible gases produced are consumed within the furnace. Underfeed stokers have been successful in large plants for as high as 400 per cent of boiler rating.

Combustion "Type E" Stoker. A central retort extends back horizontally from the hopper; grate bars adjoin it at the top, on both sides. The bars slope slightly toward the outside dump-trays. The coal is pushed into the bottom of the retort, raised to the grate bars by pushers, and worked toward the outside by reciprocating rocker bars in the grate. Each unit is operated, and can be banked or forced, independently. Air is fed in through a central wind box under the retort, and through the ventilated grate bars; the fan speed is controlled by a damper regulator responsive to the steam pressure, while the supply of coal is controlled by adjusting the number of strokes of the pusher. The stoker is recommended for semi-anthracite, semi- and sub-bituminous coals. The wind box pressure should be from 1 to 5.5 in., say 1 in. per 10 lb. combustion rate, and the suction at the fuel bed is 0.05 in. Boilers can be driven at 225 per cent continuously, and at 300 per cent or more of rating, for several hours.

Jones Stoker, Fig. 74. A series of retorts are inclined slightly to the back of the hoppers. A steam cylinder operates a pusher rod, which feeds a charge of coal and forces the preceding charge of green coal backward and up. The coke on top and the volatile gases formed below are burned in the upper incandescent zone. The balanced dump plate is dropped to remove accumulated ashes. Air under pressure is supplied to tuyeres at the dead plate, and other points in the furnace. The rates of supply of air and coal can be varied by hand, or are automatically controlled by the steam pressure.

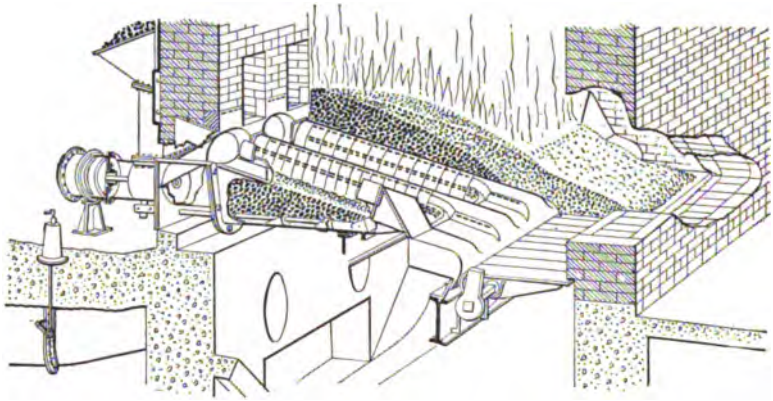

Fig. 74. Jones Automatic Self-Cleaning Underfeed Stoker.

Moloch Stoker, Fig. 75. The horizontal retorts are fed by a steam ram. Air is admitted through the tuyeres in the upper part of the retorts. In the larger units clinker grinders are placed between the retorts and remove the refuse automatically. The stoker is used for bituminous and semi-bituminous coals. Fair ratings can be developed with 0.30 to 0.45 in. natural draft; with forced draft of 3.5 to 4 in., practically any desired rating can be maintained.

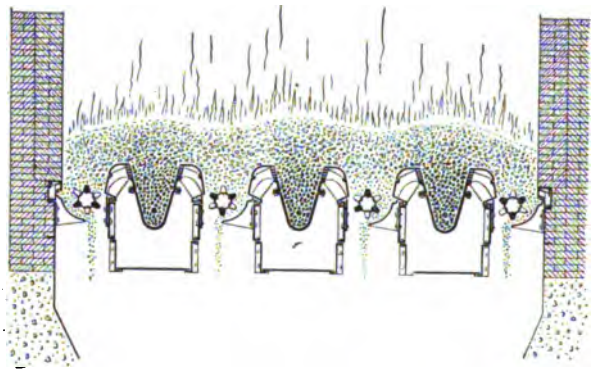

Fig. 75. Moloch Self-Cleaned Underfeed Stoker.

Roach Stoker, Fig. 76, has a ram-fed central retort, live and dead grate bars sloping away from it on each side. Part of the air is supplied through the bottom of the retort, while that to the grates is regulated by several gates. Refuse is removed by dump plates at the side of the grates.

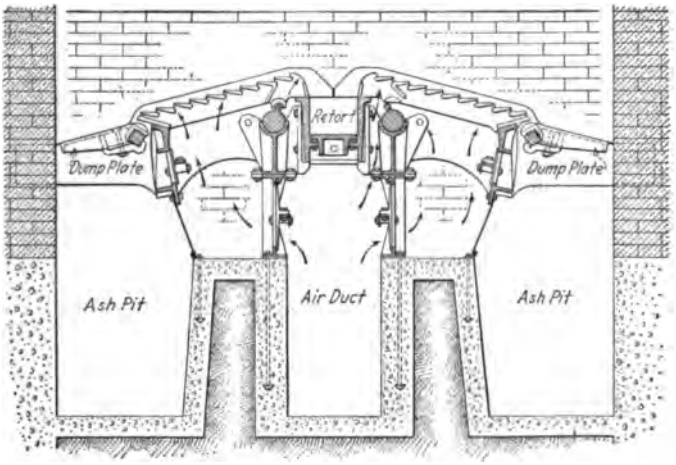

Fig. 76. Roach Underfeed Stoker.

Stevens Stoker. Screw conveyors force the coal through horizontal troughs. The space between the troughs is filled by rocking grates, set flush with the tops of the troughs. Full boiler rating is developed with 0.25-in. natural draft over the fire, and 200 per cent is secured with a 1-in. ashpit pressure.

Universal Stoker, Fig. 77. Coal is forced into the retort by a steam ram bearing a breaker bar. Air is admitted under pressure through tuyeres arranged in steps at the sides of the retort. At the rear is placed a supplemental combustion chamber, where the fuel is reduced to ash and dumped into the water-sealed ashpit.

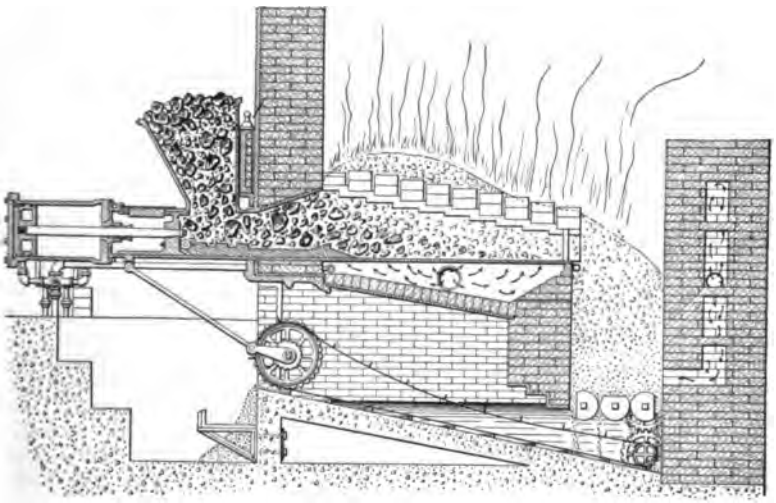

Fig. 77. Universal Automatic Underfeed Stoker.

Westinghouse Underfeed Stoker, Fig. 78, is of the gravity underfeed type; the coal is fed to the lower zone, but its movement toward the dump plate is aided by the slope of the retorts. Between the retorts are semi-circular corrugated tuyeres D, which supply air under pressure. The coal is moved by the upper ram K, by the lower ram O in the bed of the retort, and by the moving "overfeed section" G at the rear and bottom. The ash dumps are in pairs, pivoted front and rear. Air enters through the tuyeres separating the retorts, through the overfeed section, and through box J at the front. This stoker is recommended for plants where the load is subject to wide and sudden variations. Natural draft can be used at light loads, and 400 per cent of rating can be secured for peaks, at 6 to 7-in. pressure in the wind box.

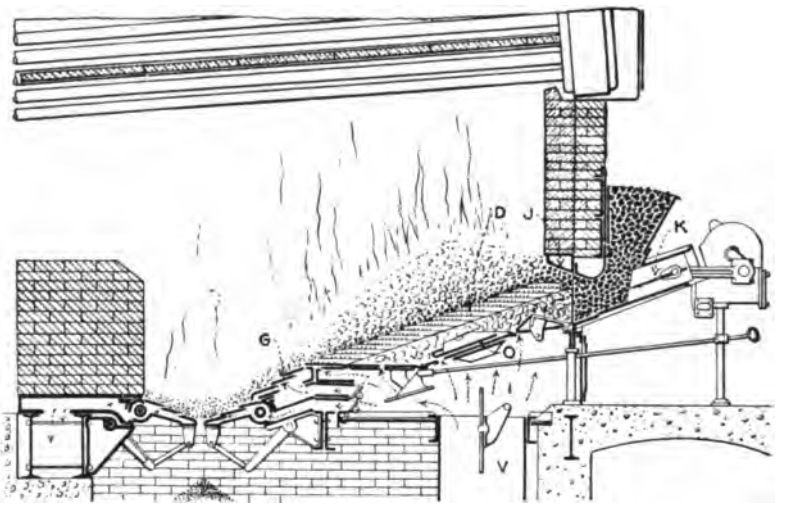

Fig. 78. Westinghouse Underfeed Stoker.

Taylor Stoker, Fig. 79. The retorts are sloping, with perforated tuyeres in between; each step is V-shaped, the opening being toward the front. The coal is pushed into the retorts 1 by feeding rams 5, and is either crowded upward or pushed into the fire by short-stroke rams 6, 6, the final combustion taking place on the extension grates 7. The combustible gases are ignited in the incandescent zone at the front and top of the coal bed. The power dump plate 8 is rapidly oscillated to dislodge and dump the refuse and clinkers. In an alternative design the refuse is ground between crushers, at a speed which keeps the discharge ash-sealed. Bituminous, semi-bituminous, and semi-anthracite, and even lignite coals can be burned. At normal ratings a forced draft of 1.5 to 2 in. is used, with 0.03-in. suction. A wind box pressure of 3 to 4 in. with 0.03-in. suction, will permit continuous operation at 200 to 300 per cent rating. During peaks, from 60 to 80 lb. of coal per sq. ft. per hr. can be burned.

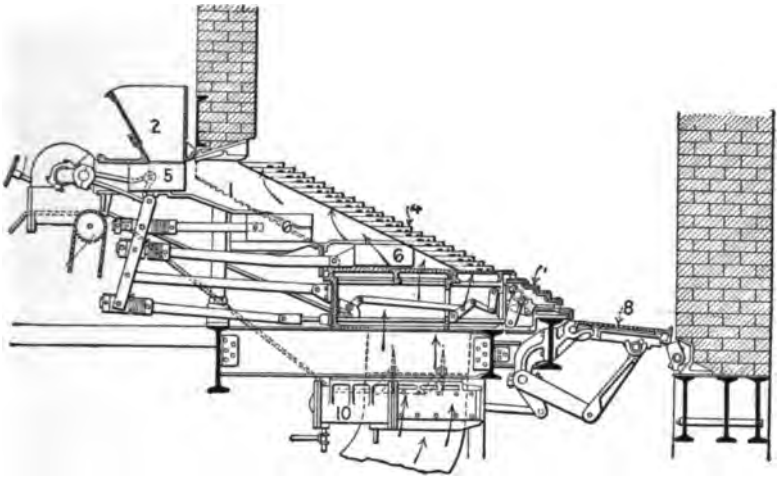

Fig. 79. Taylor Underfeed Stoker.

Riley Stoker, Fig. 80. The retort walls move and also agitate the "overfeed grate bars," which supply air for combustion. Farther down the slope, at the moving overfeed bars, the unconsumed coke is burned with the aid of smaller quantities of air. The refuse finally passes to the rocker dump plates, which are in continuous operation; here the refuse is crushed and ejected at a rate depending on the size of the opening. The stoker can burn lignite and all grades of bituminous coals. Forced draft is used, up to 5 in., with a slight suction. At peak loads 200 to 300 per cent rating and over is obtained.

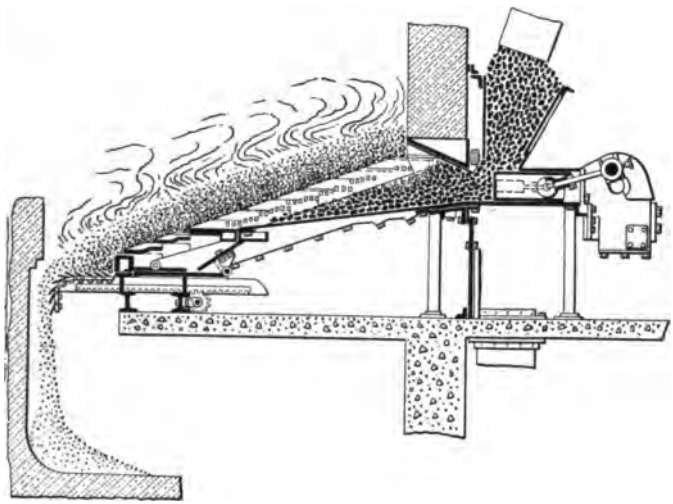

Fig. 80. Riley Underfeed Stoker.

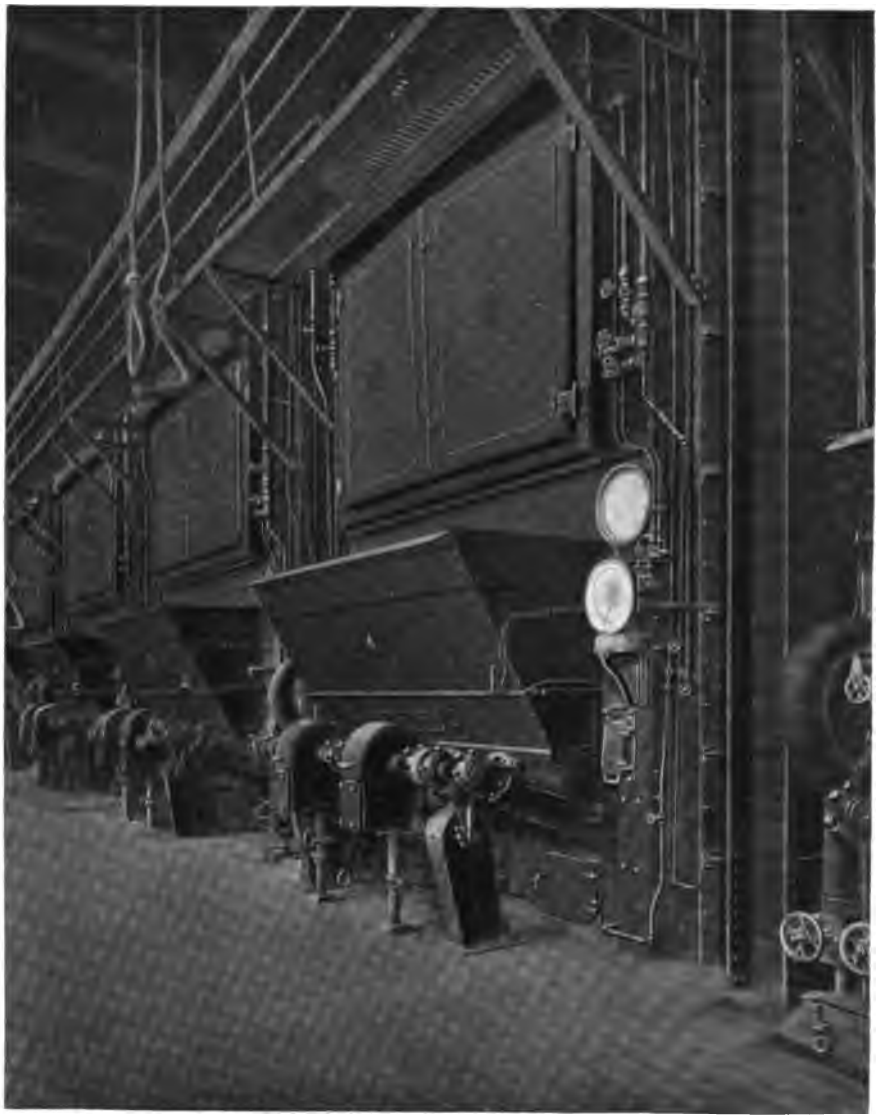

2500 H. P. Installation of Heine Standard Boilers set over Westinghouse Underfeed Stokers in the Plant of Harrisons, Inc., Philadelphia, Pa.

Chain or Traveling Grate Stokers

IN THE chain grate stoker the coal is deposited on the grate in front, and is ignited by the aid of arches. It is then coked, gradually burned to ash without agitation or cleaning, and is automatically dumped at the rear. The gear-trains driving the pulley-shafts are actuated by a ratchet and pawl, an adjustable arm being reciprocated by an eccentric on a line shaft. Chain grates handle normal loads efficiently, and with a minimum of smoke, although the maximum rate of driving is only about 250 per cent. They work particularly well with low-grade, free-burning bituminous coals, such as those from Illinois and Iowa, containing 30 to 40 per cent volatile and 10 to 20 per cent ash. With coals of a lower ash-content, the stoker may overheat.

Continental Chain Grate Stoker consists of small units, with dove-tail and semi-circular recesses for locking each grate, and of rollers traveling on upper and lower tracks. The ignition arch over the front is made of ventilated tile. The depth of fuel bed is regulated by a tile-lined gate. A water-cooled chamber in front of the bridge wall prevents adhesion of clinker. The stoker is built for all grades of free-burning coal and lignite with ash content over 7 per cent, and for all sizes from slack to 2-in. nut. A suction of 0.2 in. over the fire is sufficient when burning Illinois and Indiana coal at a 30-lb. rate, or 0.5 in. at a 50-lb. rate.

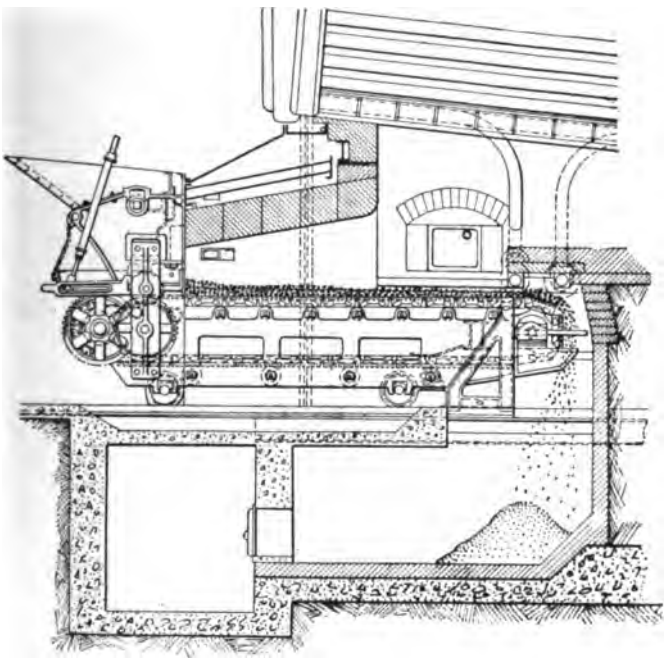

Fig. 81. Green Chain Grate Stoker—Type K.

Coxe Traveling Grate. The pressure in the air compartments below the fire is varied according to the thicknesses of fuel bed. A combustion arch covers the greater part of the grate. This stoker is designed for small anthracite and coke breeze, but also operates with free-burning, high-ash coals. The former have been burnt at rates up to 50 lb. per sq. ft. per hour. Forced draft of 1 to 2 in. is used.

Type K Green Chain Grate, Fig. 81, employs a large, flat, ventilated ignition arch. In some installations a stationary waterback is placed in the bridge wall. Natural draft is used; about 0.1 in. is required for each 10 lb. of coal burned per square foot per hour, the usual rate being 30 to 40 lb. The Type K stoker is designed for free-burning coals.

Type L Green Chain Grate is built for coking coals. The coal passes from the hopper to a stationary inclined plate, where it is coked before dropping onto the grate. Either natural or forced draft is used with this type, or induced draft when economizers are installed. Installations are operated up to 250 per cent of rating.

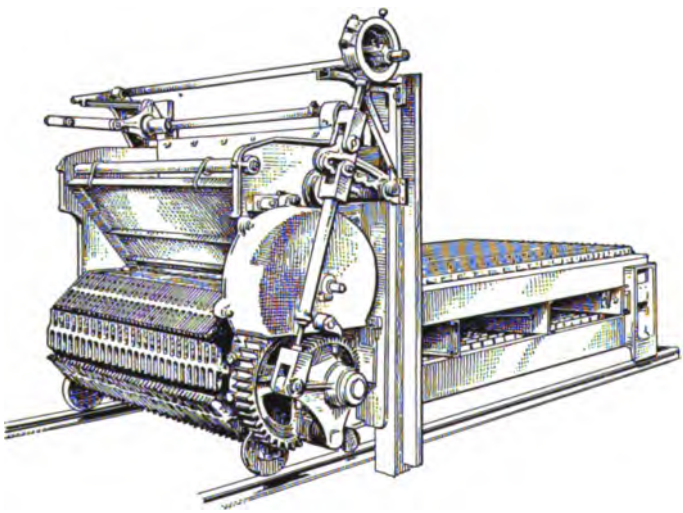

Fig. 82. Harrington Chain Grate Stoker.

Brady (Harrington) Grate, Fig. 82, is designed for forced draft, at combustion rates up to 75 lb., although natural draft can be used at normal rating. The grate is built of small interlocking bars, giving a continuous surface, no parts of which are exposed to excess heat in turning at the rear. The air supply at different points is controlled by adjustable dampers

Illinois Chain Grate has a slight dip to the rear, and a long, flat combustion arch. Middle Western coals with over 20 per cent ash are burnt. At a 40-lb. rate the draft is 0.63 in. over the fire and 1 in. at the

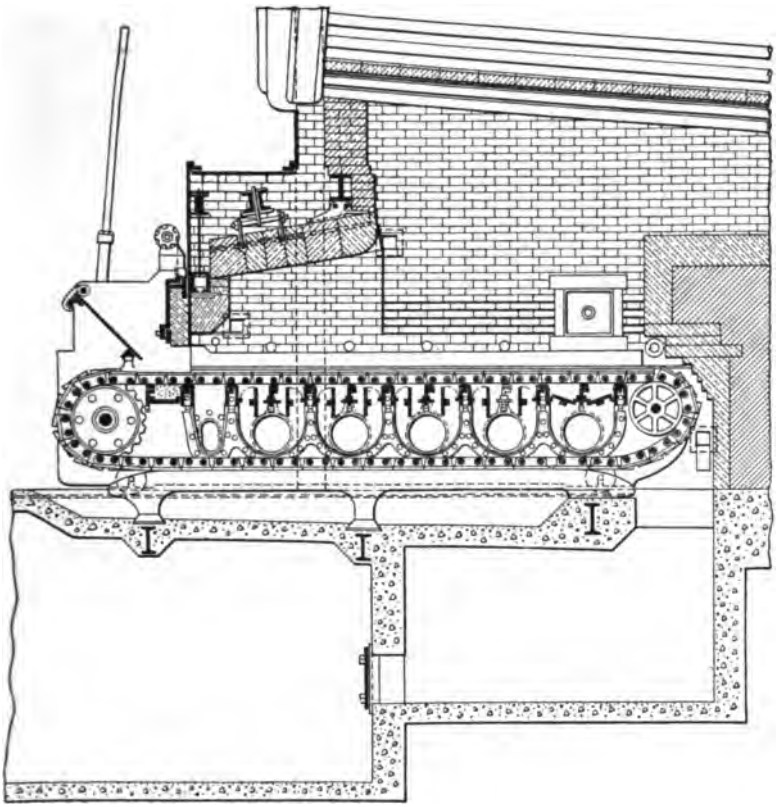

Fig. 83. Illinois Chain Grate Stoker.

damper. With coals containing from 10 to 20 per cent ash, 0.4 in. over the fire is sufficient. Under forced draft, the draft over the fire can be less than 0.15 in., with 1 to 4-in. wind-box pressure.

Laclede-Christy Chain Grate, Fig. 84, has a slightly inclined grate, in an air-tight setting, with long overhead arch. Air enters through small openings in the links, a swinging damper being used to reduce the supply at the rear. This stoker is designed for high-volatile, high-ash coals, especially those from the West, and operates under natural draft. A chimney height of 200 ft. is sufficient for operation at more than 200 per cent rating.

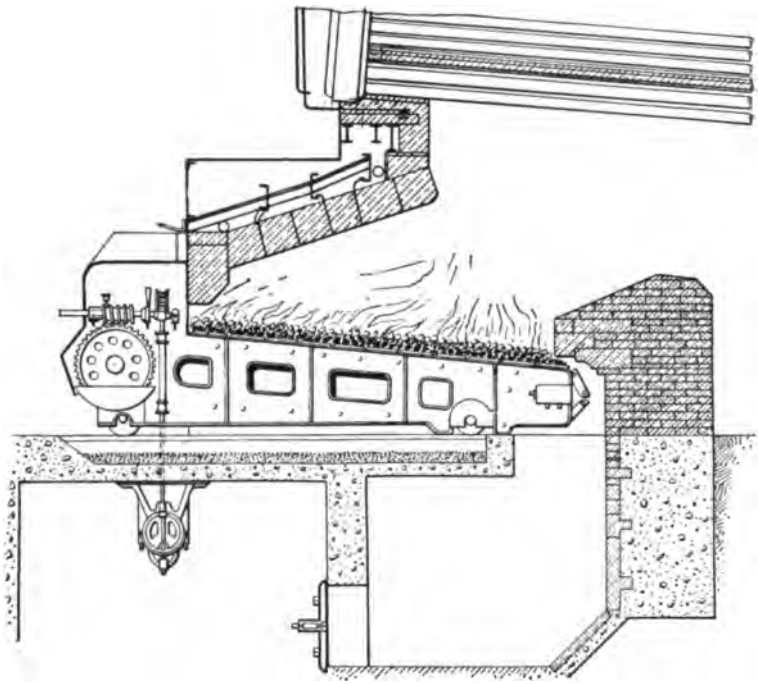

Fig 84. Laclede-Christy Chain Grate Stoker.

Playford Chain Grate. The flat ignition arch is air-cooled, a water-cooled fuel-gate preventing back-firing of coal in the hopper. The bridge wall is protected from clinker, and air inleakage prevented, by a fixed water-back. In some installations a movable back is cooled by either water or air; the material at the back of the grate can then be held back or dumped at will. The stoker is adapted for bituminous coals with 25 to 40 per cent volatile matter. Natural draft, 0.15 to 0.4 in., is used.

National Stoker, Fig. 85. Rows of pushers in recesses in the middle and lower parts of the inclined grate are hand operated by levers in the boiler front. The fuel is fed, coked and burned as in mechanically operated stokers. This stoker is applied to small or medium-sized furnaces.

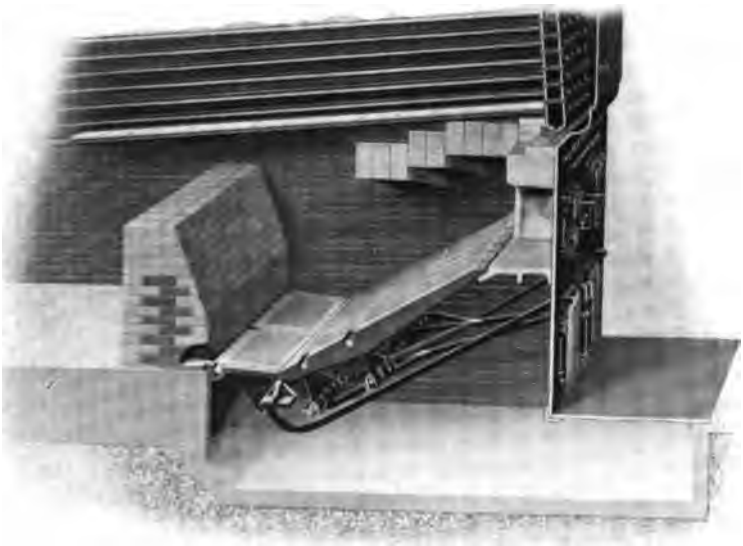

Fig. 85. National Hand Operated Overfeed Stoker.

Ridgewood Pumping Station, Brooklyn, N. Y., Containing 2416 H. P. of Heine Standard Boilers.

CHAPTER 6

CHIMNEYS AND FLUES

THE pressure of the draft is the difference in the weight of the column of hot gases within the chimney and of the corresponding column of air outside. It is measured by the difference in level of water in the legs of a "U" tube, of which one leg is connected to the base of the stack and the other is open to the atmosphere. The hotter the gases, the higher the chimney, or the cooler the atmosphere, the greater is the draft.

The performance of chimneys is disturbed by many circumstances, particularly by the weather. Variations in the barometer affect the draft nearly 10 per cent. The draft may be nearly 50 per cent greater when the air temperature is zero than when it is 100 degrees. As the quantity of gas flowing up the chimney is increased, the pressure necessary to overcome the friction of the gas flow is increased, leaving a lower draft reading on the "U" gage.

While there is a minimum height for any draft requirement, the height is generally influenced by local considerations. For satisfactory results, chimneys should be higher than surrounding buildings, hills, trees or other nearby obstructions, so that wind eddies will not interfere with the draft.

The minimum chimney height necessary in any case depends upon the fuel used. Wood requires the least height, good bituminous coal requires a medium height, while fine sizes of anthracite need the greatest chimney height. The rate of combustion, boiler gas passages, flue design, and the number of boilers, also influence the stack height.

Small plants burning bituminous coal or large anthracite may have stacks from 70 to 100 ft. high. If burning anthracite pea or buckwheat, they should be 125 to 150 ft. high. Plants of 800 H.P. or more should have stacks not less than 150 ft., whatever kind of coal is burned. To burn No. 3 buckwheat at any practical rate, the chimney will have to be more than twice as high as would be required to burn pea coal. This height is generally prohibitive, and small anthracites are almost invariably burned with artificial draft.

The tallest chimney in the world is the interior stack of the Equitable Building, New York, 596 ft. high, serving 3500 H.P. of Heine boilers.

Chimneys over 200 ft. high are usually unnecessary. Unless conditions call for a taller stack, two or more shorter stacks should be erected, as the two will usually cost less than the taller stack. There is a diameter corresponding to the most economical construction for any stack height. According to *W. Deinlein,* the smallest product of diameter and height represents the chimney of minimum cost. For any given conditions, this relation can be established graphically as shown in Fig. 86: Assuming a masonry chimney, we find from the "H = height" curve that this particular chimney could be 175 ft. high by 20 in. diameter, or 125 ft. by 23 in., or 100 ft. by 31 in., and so forth. These products are then plotted to form the curve "dH = Relative Cost" and we see that the lowest point of this curve occurs at 25 in., for which diameter the appropriate height is 115 feet. This is the lowest priced chimney that can be built to meet the conditions.

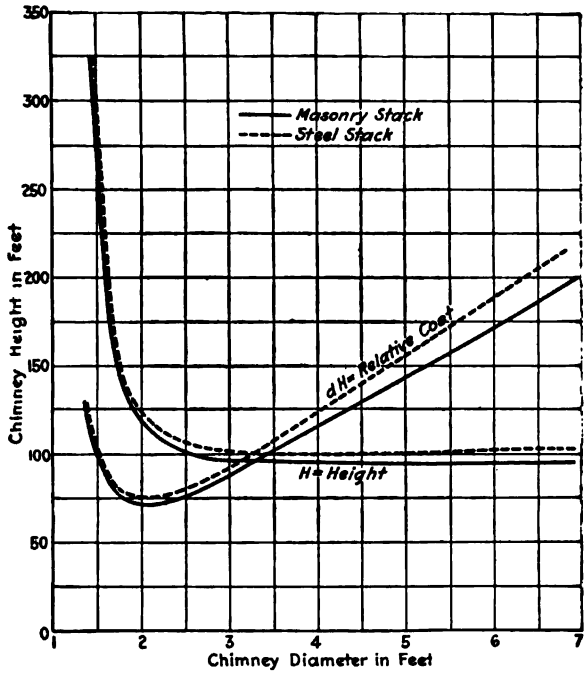

Fig. 86. Relation of Height and Diameter to Minimum Cost of Chimney for a given Boiler Capacity.

The gas temperature in the stack falls as the distance above the entering flue increases. This is shown in Fig. 87, based upon tests by *Kilborn* and *Alexander,* on a tall masonry chimney.

An analysis of numerous tests, by *E. J. Miller,* shows that the observed draft intensity usually does not vary more than 3 per cent from that calculated when the temperature drop in the chimney is allowed for. Still, in general chimney calculations, uniform temperature is assumed, and the temperature of the entering gases is the temperature used. Hence, the great difference between the draft calculated and that actually observed. This difference is stated by different authorities as 10, 15, and 20 per cent. and they recommend that appropriate allowance be made.

In the following treatment, the fall in temperature of the gases as they ascend the stack has been taken into consideration. The average temperature of the gases in stacks of different diameters and heights has been deduced from observation, and curves convenient for general use have been drawn.

The logical method of treating the subject is to compute the characteristics of chimneys, as is done with fans. The minimum draft necessary at the base of the chimney should first be found, and then chimney sizes to produce that draft at the required capacity can easily be chosen. In the following discussion, reasonable values of air and gas temperatures, and operating efficiency, will be assumed and the effect of departures therefrom indicated. These assumed conditions must be lived up to in operation, or the calculated results will not be attained.

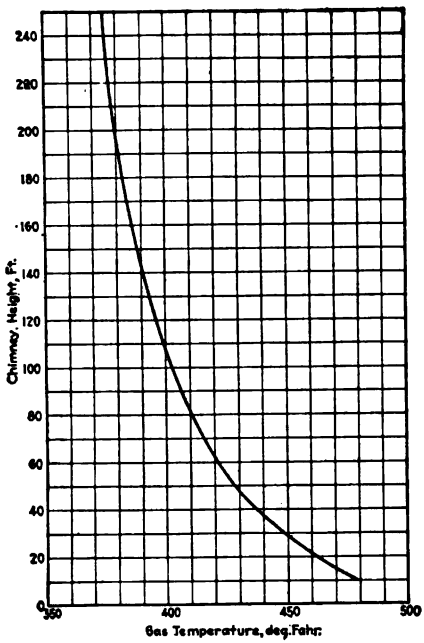

Fig. 87. Fall of Gas Temperature as Distance from Entering Flue Increases.

Chimney Sizes by Horsepower

THE chimney horsepower table of *William Kent*, modified to include the draft at the base of the chimney, is given in Table 9.

The draft to be observed at the base of the stack as given in the table. is computed on the following assumptions:

The horsepower given is the *rated* horsepower of the boilers.

The boilers are run at 130 per cent of their rating.

Five pounds of coal are burned per boiler horsepower hour.

Each pound of coal produces 20 lb. of flue gases.

Atmospheric temperature, 60 deg. Barometer, 30 inches.

Humidity ignored as negligible.

Temperature of gases entering stack, 500 deg.

Allowance has been made for the drop of temperature of the gases as they ascend the stack.

As an example, take five boilers, each rated at 160 H.P., making 800 H.P. in all.

From the table, it is seen that this load is met by the following proportions:

72 inches dia. 100 feet high 0.50 inch draft
66 inches dia. 150 feet high 0.65 inch draft
60 inches dia. 200 feet high 0.74 inch draft

To decide which of these is appropriate, local conditions must be first considered. Then the necessary draft at the stack base must be determined from the draft resistances of the fuel bed, boiler setting and so forth, as explained later; and the sum of these will determine the draft necessary at the stack base and consequently the minimum height of chimney. Then the most economical proportion of height to diameter should be found by applying the principle illustrated in Fig. 86, so that the chimney of least cost, which will meet the various conditions, may be adopted.

Table 9. Chimney Sizes by Horsepower.

Dia. In.	Area, (A) Sq. Ft.	Effective Area, Sq. Ft. $E=\frac{A}{0.6\sqrt{A}}$	HEIGHT OF CHIMNEY, Ft.												Equivalent Square Chimney In. Side of Square $=\sqrt{E}+4$
			60	70	80	90	100	110	125	150	175	200	225	250	
			Upper Figure = Commercial Horsepower Rating Lower Figure = Draft at Base of Chimney at 130 per cent of Commercial Horsepower Rating												
24	3.14	2.08	54	58	62	66	....	....	....	....	....	....	....	....	22
			0.31	0.35	0.38	0.41	....	....	....	....	....	....	....	....	
27	3.98	2.78	72	78	83	88	....	....	....	....	....	....	....	....	24
			0.31	0.35	0.38	0.42	....	....	....	....	....	....	....	....	
30	4.91	3.58	92	100	107	113	119	....	....	....	....	....	....	....	27
			0.31	0.35	0.38	0.42	0.45	....	....	....	....	....	....	....	
33	5.94	4.48	115	125	133	141	149	156	....	....	....	....	....	....	30
			0.31	0.35	0.38	0.42	0.46	0.48	....	....	....	....	....	....	
36	7.07	5.47	141	152	163	173	182	191	204	....	....	....	....	....	32
			0.31	0.35	0.39	0.43	0.46	0.49	0.53	....	....	....	....	....	
39	8.30	6.57	....	183	196	208	219	229	245	268	....	....	....	....	35
			....	0.35	0.39	0.43	0.47	0.50	0.54	0.58	....	....	....	....	
42	9.62	7.76	....	216	231	245	258	271	289	316	342	....	....	....	38
			....	0.35	0.39	0.43	0.47	0.51	0.55	0.59	0.61	....	....	....	
48	12.57	10.44	....	....	311	330	348	365	389	426	460	492	....	....	43
			....	....	0.39	0.44	0.48	0.52	0.56	0.60	0.64	0.68	....	....	
54	15.90	13.51	....	....	....	427	449	472	503	551	595	636	675	....	48
			....	....	....	0.45	0.49	0.53	0.57	0.62	0.67	0.71	0.74	....	
60	19.64	16.98	....	....	....	536	565	593	632	692	748	800	848	894	54
			....	....	....	0.45	0.49	0.53	0.57	0.64	0.70	0.74	0.77	0.78	
66	23.76	20.83	....	....	....	....	694	728	776	849	918	981	1,040	1,097	59
			....	....	....	....	0.50	0.53	0.58	0.65	0.72	0.76	0.80	0.82	
72	28.27	25.08	....	....	....	....	835	876	934	1,023	1,105	1,181	1,253	1,320	64
			....	....	....	....	0.50	0.54	0.59	0.67	0.73	0.78	0.83	0.85	
78	33.18	29.73	....	....	....	....	....	1,038	1,107	1,212	1,310	1,400	1,485	1,565	70
			....	....	....	....	....	0.54	0.60	0.67	0.75	0.80	0.85	0.88	
84	38.48	34.76	....	....	....	....	....	1,214	1,294	1,418	1,531	1,637	1,736	1,830	75
			....	....	....	....	....	0.55	0.61	0.68	0.76	0.82	0.87	0.91	
90	44.18	40.19	....	....	....	....	....	....	1,496	1,639	1,770	1,892	2,008	2,116	80
			....	....	....	....	....	....	0.61	0.69	0.77	0.84	0.89	0.94	
96	50.27	46.01	....	....	....	....	....	....	1,712	1,876	2,027	2,167	2,298	2,423	86
			....	....	....	....	....	....	0.62	0.70	0.18	0.85	0.91	0.96	
102	56.75	52.23	....	....	....	....	....	....	1,944	2,130	2,300	2,459	2,609	2,750	91
			....	....	....	....	....	....	0.62	0.70	0.79	0.86	0.93	0.98	
108	63.62	58.83	....	....	....	....	....	....	2,090	2,399	2,592	2,771	2,939	3,098	96
			....	....	....	....	....	....	0.63	0.71	0.80	0.88	0.95	1.00	
114	70.88	65.88	....	....	....	....	....	....	....	2,685	2,900	3,100	3,288	3,466	101
			....	....	....	....	....	....	....	0.72	0.81	0.90	0.97	1.02	
120	78.54	73.22	....	....	....	....	....	....	....	2,986	3,226	3,448	3,657	3,855	107
			....	....	....	....	....	....	....	0.73	0.82	0.91	0.98	1.03	
132	95.03	89.18	....	....	....	....	....	....	....	3,637	3,929	4,200	4,455	4,696	117
			....	....	....	....	....	....	....	0.74	0.84	0.93	1.00	1.06	
144	113.10	106.72	....	....	....	....	....	....	....	4,352	4,701	5,026	5,331	5,618	128
			....	....	....	....	....	....	....	0.75	0.86	0.95	1.03	1.09	
156	132.73	125.82	....	....	....	....	....	....	....	....	5,542	5,925	6,285	6,624	138
			....	....	....	....	....	....	....	....	0.88	0.97	1.05	1.12	
168	153.94	146.51	....	....	....	....	....	....	....	....	6,454	6,899	7,318	7,713	150
			....	....	....	....	....	....	....	....	0.89	0.98	1.07	1.15	

The assumptions on which the table is based meet all ordinary conditions. The effect of other conditions will now be discussed and compared.

As stated above, the draft at the chimney base, as given in the table, was computed at 130 per cent of boiler rating. In the example just taken the drafts read from the table are those to be expected when the boilers are running at 130 per cent of rating or developing 800x130 per cent=1040 B.H.P. In the following discussion, the draft read from the table is considered as one hundred per cent.

The first change considered will be that caused by adding or taking off boilers, the load on individual boilers remaining the same. Under these circumstances, the temperature of the gases entering the chimney remains the same, and the draft falls off as the addition of more boilers increases the load on the chimney. The rate at which the draft falls off depends upon the ratio of diameter to height (H/D) and curves have been drawn for different ratios in Fig. 88. These show very clearly that the draft diminishes much more rapidly in slender than in squat chimneys.

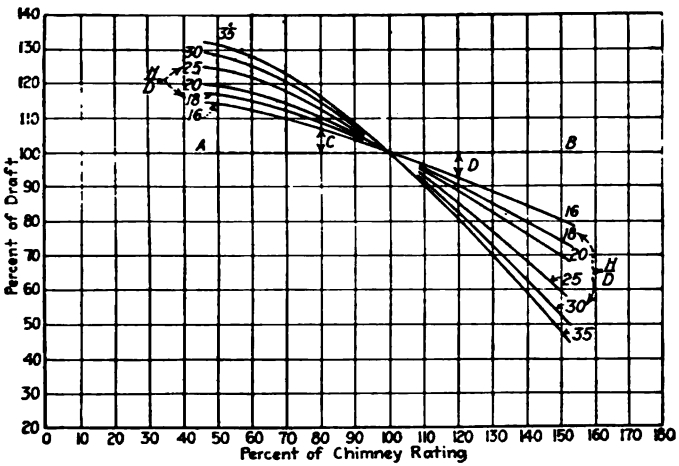

Fig. 88. Percent of Draft Required for Different Ratings of Chimneys Based on Boilers Running at 130 Percent of their Rating.

Taking the first chimney of the above example H/D=100/6=16.7. Using the nearest curve given in Fig. 88, where H/D=16, and taking off one boiler so that the chimney load is reduced to 80 per cent of chimney rating, the draft is now shown (as at C) to be 107 per cent. The draft at 100 per cent of chimney rating was 0.50 inch, therefore the draft with only four boilers in operation will be 107 per cent of 0.50, or 0.54 inch.

Continuing with the first chimney of the example, and adding one boiler, the load will now be 120 per cent of chimney rating. The draft (as at D) is now 92 per cent, so that the draft at the base of the stack with six boilers in operation will be 92 per cent of 0.50 or 0.46 inch.

The change in the draft caused by varying the load on a fixed number of boilers will now be considered. The temperature of the gases leaving the boilers increases as their rate of driving is increased, as shown by Fig. 90. As the temperature rises, the gases become lighter. This increases the static draft and lowers the increase of friction loss, as explained later. The rate

at which the draft falls off is less than in the previous case, and may even rise. The curve is now dependent upon the ratio of square root of diameter to height ($H/\sqrt{D}$) and curves have been drawn for several different ratios in Fig. 89. It will be seen that this chart is marked for both chimney rating and boiler rating, and that 130 per cent of boiler rating is equal to 100 per cent of chimney rating.

Again taking the first chimney of the example, $H/\sqrt{D}=41$. Using the nearest curve in Fig. 89, where $H/\sqrt{D}=40$, and decreasing the chimney load to 80 per cent, which reduces the boiler load to 104 per cent of rating, the draft (as at C) is now 96.5 per cent of that at chimney rating. The draft at the base of the stack is now 96.5 per cent of 0.50 or 0.48 inches. At 120 per cent of chimney rating equal to boilers running at 156 per cent, the draft (as at D) is 108 per cent or 0.54 inches.

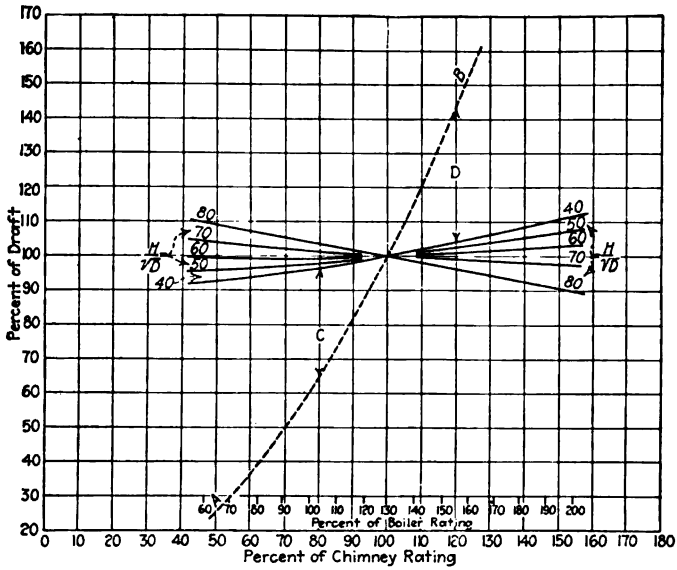

Fig. 89. Percent of Draft Required for Different Ratings of Chimneys and Boilers.

On each of the charts the dotted line A-B represents the proportionate amount of draft *required*. This curve is drawn on the assumption that the draft required varies as the square of the horsepower developed in a given boiler, which is not true, but is as close as is necessary. In Fig. 88, it is a horizontal line. The draft required is constant, since the load is varied by adding or shutting down boilers. The amount of draft must be increased somewhat as more boilers are added, owing to greater length of flues and more turns and enlargements. This increase is not large and is different in every case, so that it has been ignored in the chart. In Fig. 89, the curve rises quickly. In both figures the unnecessary draft at C is extinguished by partly closing the damper, while the defect of draft at D must be made up by artificial or mechanical draft.

The curves drawn in Figs. 88 and 89 are based on the temperatures of the gases leaving the boiler in excess of the temperature due to the steam pressure. The curve in Fig. 90, due to *Geo. H. Gibson*, is based upon the

power developed, taken as a percentage of the commercial rating, and assuming a steam temperature of 350 deg., or 120 lb. pressure. As Fig. 88 is based on the boilers running at 130 per cent of their rating, the constant temperature of 500 deg. is assumed as that of the gases entering the stack, while in Fig. 89 the temperatures appropriate to the power as given in Fig. 90 have been used.

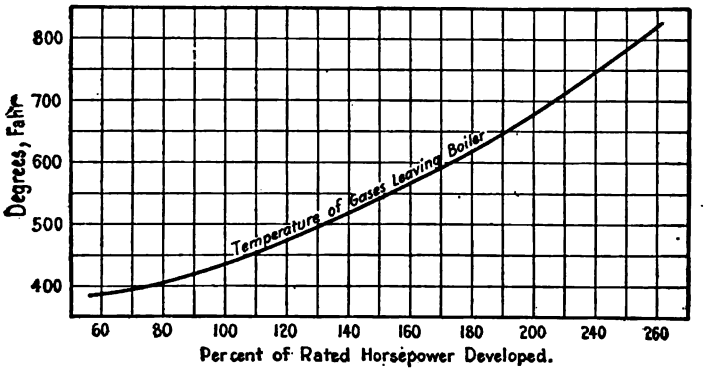

Fig. 90. Excess Temperature of Gases Leaving Steam Boiler as Affected by Rate of Driving.

So far, we have used the same basis as Kent in assuming 5 pounds of coal per B.H.P. and 20 pounds of flue gases per pound of coal. These figures are sufficiently liberal for reasonably careful operation. But where an excess of air is allowed to leak in through defective settings, firedoors, holes in the fire, and so forth, the quantity of gases to be dealt with may be greatly increased. This increases the load on the chimney. The amount of excess air

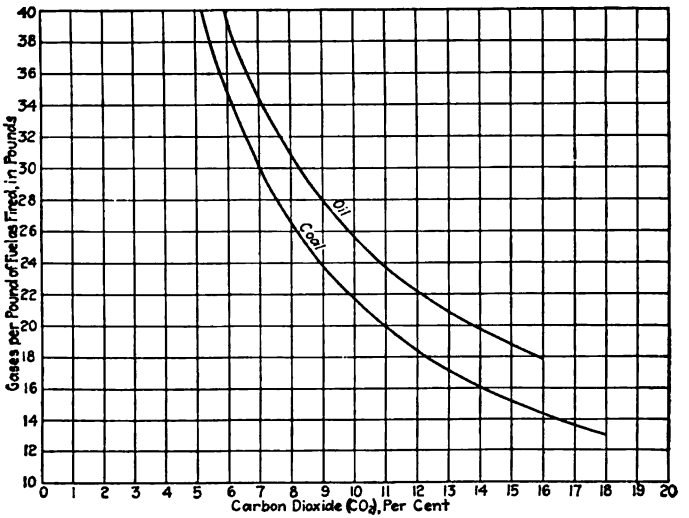

Fig. 91. Effect of Excessive Air. Increase in Weight of Gases as CO_2 is Reduced.

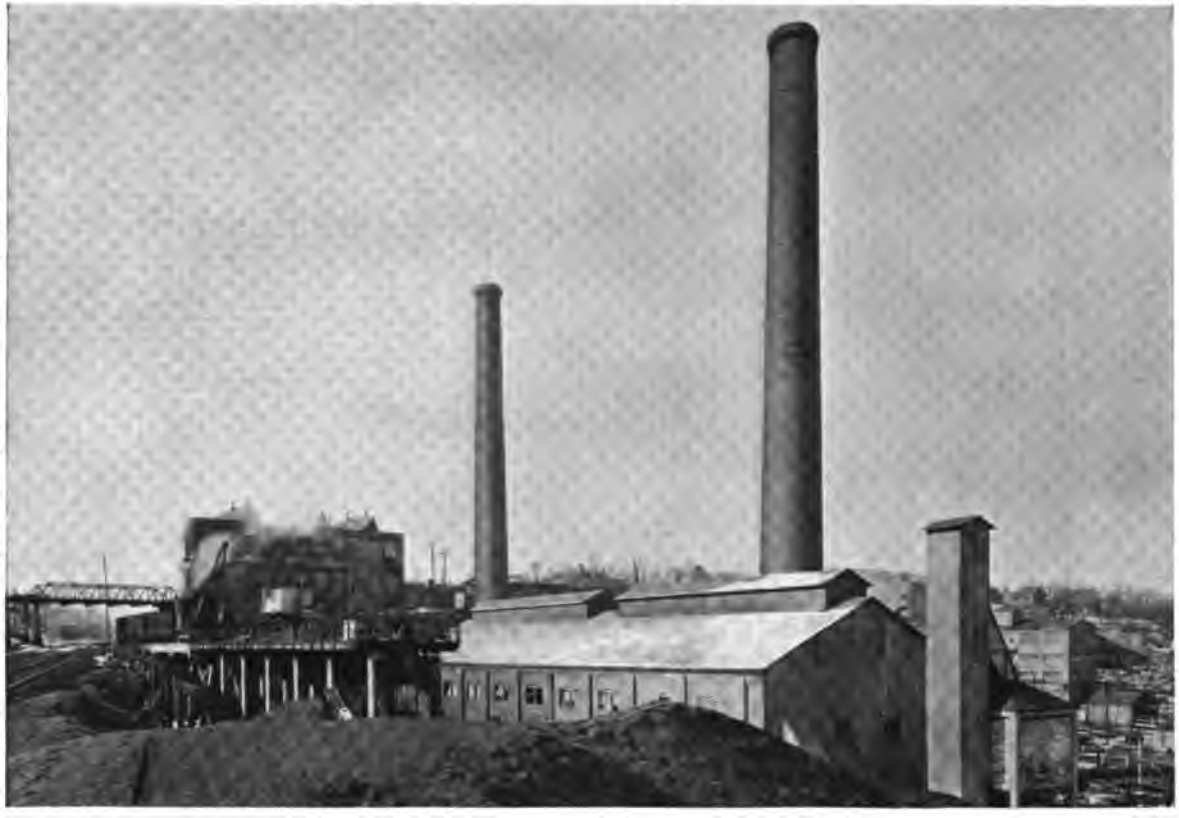

Arlington N. J. Works, of the E. I. du Pont de Nemours & Co., Inc. This Company has installed 4500 H. P. of Heine Standard Boilers in this Plant, and 5714 H. P. in its Subsidiaries.

is found from analysis of the flue gases as explained in Chapter 15 on BOILER TESTING, and is shown by the percentage of CO_2. Fig. 91 is a representative example of the weight of gases per pound of fuel with different percentages of CO_2. With the coal of analysis used in drawing the curve, 20 pounds of gas per pound of fuel is due to 11 per cent of CO_2. If the CO_2 is reduced to 7 per cent, then the weight of gas is increased to 30 pounds, or 50 per cent more. Under these conditions a given chimney could only care for two-thirds the load expressed in boiler horsepower. In many instances overloaded chimneys have been relieved by the addition of forced draft and otherwise improved operation so that the weight of gas per boiler horsepower has been sufficiently reduced to enable more power to be developed without alteration to the chimney.

Draft and Capacity of Chimneys

THE curves, Fig. 92, are deduced from observations by *Peabody* and *Miller* and by *J. C. Smallwood*. All are for temperatures above that of the atmosphere. Thus, taking gases entering at 500 deg., and atmospheric temperature of 60 deg., the difference is 440 deg. In a masonry stack

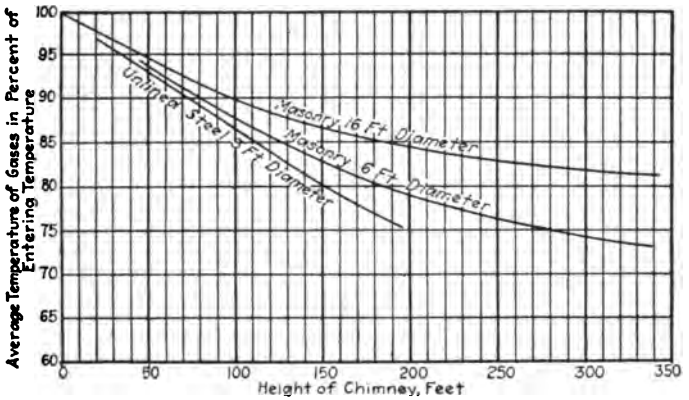

Fig. 92. Average Temperature of Gases in Percent of Entering Temperature according to Height of Chimneys.

7 ft. diameter, 200 ft. high, the average temperature will be 80 per cent of the entering temperature, 440 × 0.80, or 350 + 60 = 410 deg. as actual average temperature. At heavy loads the average temperature will probably be a larger proportion of the entering temperature, and at light loads a smaller proportion than those shown by the curves. Any such differences from the curves given are likely to be negligibly small.

Fig. 93 gives the weight per cubic foot of the chimney gases under average conditions, at different temperatures, and Fig. 94, that of air.

The static draft appropriate to any chimney can be calculated by means of these three charts. Continuing with the last example and taking the temperature of the air at 60 deg. (the common assumption in designing chimneys), the weight of air per cubic foot is seen to be 0.0764 pounds. A column of air of one square foot cross-section, 200 ft. high, will weigh 200 × 0.0764 = 15.28 pounds. The column of gas (at 410 deg.) of the same height will weigh 200 × 0.484 = 9.68 pounds. The difference, 15.28 — 9.68, or 5.6 lb., is the pressure per square foot of the resulting draft. Then the static draft is 5.6 × 0.192 = 1.08 in. of water.

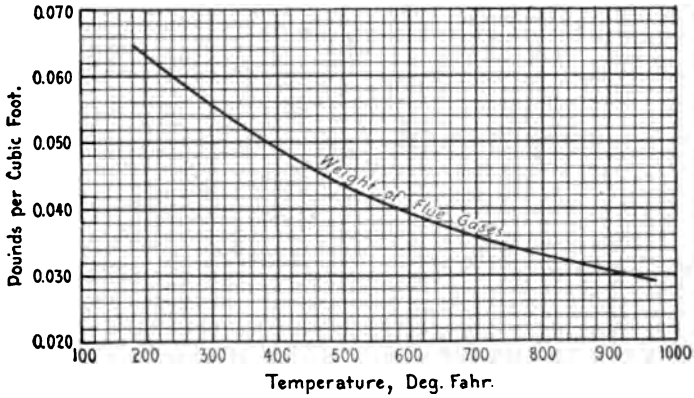

Fig. 93. Weight of Flue Gases.

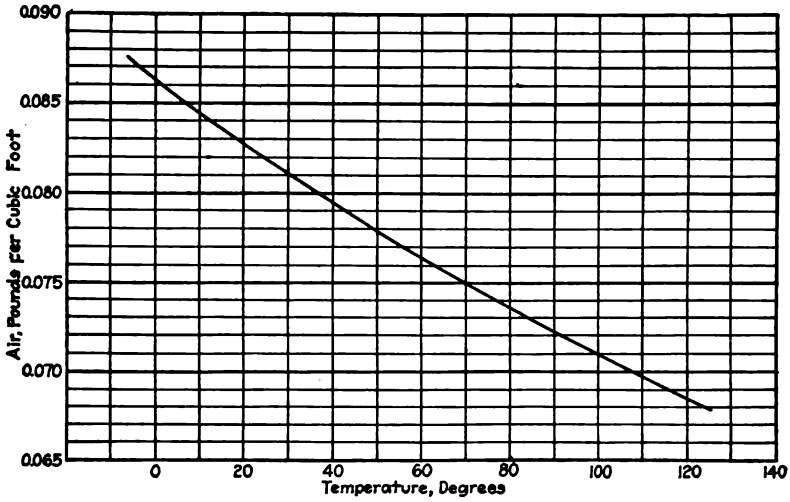

Fig. 94. Weight of Air.

In common practice, the entering temperature of 500 deg. would be taken, giving a static draft of 1.26 in., which is wrong. This static draft of 1.08 in. cannot be read on a U-gage, because part of it is lost in overcoming the friction of the gases in the chimney.

The draft loss by chimney and flue friction can be read from Fig. 95. The curves are drawn for a temperature of 440 degrees. The draft loss for any other temperature can be obtained by multiplying that read from the curves by the multipliers given by the upper curve. For instance, take the dotted lines as an example; if the temperature is 575 degrees, enter the upper scale with this temperature and proceed vertically downwards to intersection with the curve, then horizontally to the right hand scale and read the multiplier as 0.87. If the upper scale be entered with 440 degrees, the multiplier is with similar proceedure found to be 1.00. For unlined steel stacks and flues multiply the final result by 0.94.

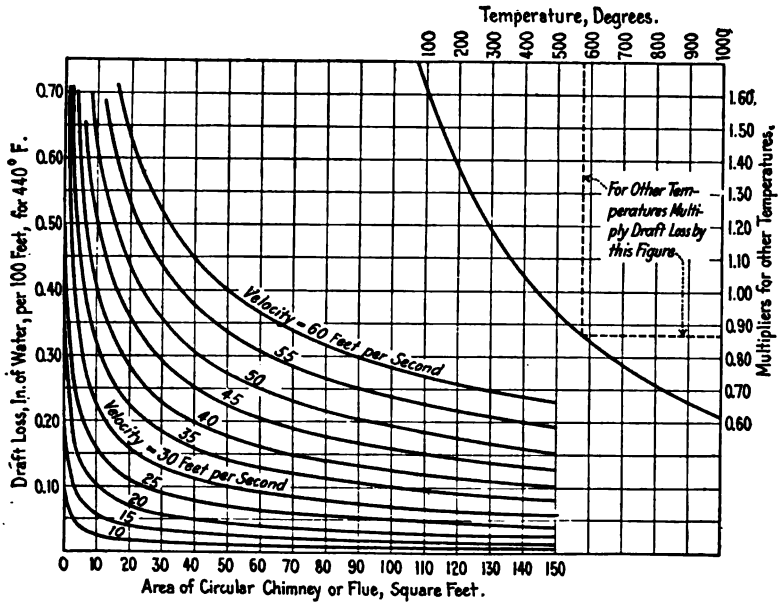

Fig. 95. Frictional Draft Loss per 100 Ft. of Circular Flue or Stack (Based on 30 Inch Barometer and 440° Gas Temperature).

The draft loss can be calculated from this formula, due to *A. L. Menzin,* on which Fig. 95 is based:

$$h = \frac{f\,L\,V^2}{D\,T} \qquad (10)$$

h = Draft loss, inches of water.
L = Height of chimney, or length of flue, feet.
D = Diameter of flue or chimney, feet.
V = Velocity of gases, feet per second.
T = Absolute temperature, degrees.
f = 0.008 for circular masonry stacks or flues.
= 0.0075 for unlined circular steel stacks or flues.
Fig. 95 was drawn with $f = 0.008$.

For square stacks or flues having the same area as round ones of diameter D, multiply h as found above by 1.06. For other shapes, the following multipliers can be used:

Ratio of Sides	Multiplier
1 to 1	1.06
1 to 2	1.09
1 to 3	1.14
1 to 4	1.19
1 to 5	1.23
1 to 6	1.27

Taking the last chimney example, 7 ft. diameter by 200 ft. high with an average temperature of the gases of 410 deg. and a velocity of 30 ft. per second, we enter Fig. 95 and find the draft loss for 38.5 sq. ft. to be 0.114 inch. As the curves are drawn for 440 deg. we enter the correction

portion with 410 deg. and find a multiplier of 1.035; applying this to the 0.114 we get 0.118. This is the draft loss per 100 ft., so doubling it we get 0.24. This result can be checked by the *Menzin* formula (10).

Under the assumed conditions the static draft for this chimney is 1.08 inches. Deducting the friction draft loss of 0.24 in., we find that the available draft at the base of the stack is 0.84 inch. This is the "draft" which is read on the U-gage.

To convert this to horsepower, 30 ft. per second multiplied by the chimney area of 38.5 sq. ft., gives 1155 cu. ft. per second. From Fig. 93 we find the weight per cu. ft. of the gases to be 0.484, so that we have 56 lb. of gas per second or 201,600 lb. per hour. As we have been assuming 100 lb. of gas per hour per horsepower, the rate becomes 2016 horsepower.

With Western coals, the sizes given in Kent's table should be increased 25 to 60 per cent. It is wiser, however, to determine the amount of coal to be burned per horsepower, either by Fig. 96 or independently of it, bearing in mind that the efficiency generally attained with poor coal is low, while a higher draft loss through the fuel-bed will be read from Fig. 97.

Chimney proportions of existing stoker-fired plants in different parts of the country are given in Table 10. A comparison with the Kent table is included.

Table 10. Chimney Installations in Typical Power Plants.

COAL-BURNING					STOKER-FIRED			
H. P. of Boilers	No. of Units	Chimney Height	Chimney Diam.	H/D	H. P. per Sq. Ft. of Stack Area	Chimney H. P. (Kent)	Percent of Kent's H. P.	Type of Stoker
1,530	2	125	8	15.6	30	1,708	90	Taylor
2,500	4	150	9	16.7	39	2,400	104	Roney
2,800	4	230	10	23.0	36	3,690	76	Chain Grate
3,600	6	225	13	17.3	27	6,290	57	Murphy
3,600	6	225	11	20.5	37	4,450	81	Roney
4,000	8	210	12	17.5	35	5,140	78	Murphy
4,800	8	180	14	12.9	31	6,530	73	Chain Grate
4,800	8	210	13	16.2	36	6,080	79	Taylor
5,800	10	250	17	14.7	26	11,480	51	Chain Grate
9,600	16	275	16	17.2	48	11,640	82	Taylor
9,760	8	250	19	13.2	34	14,400	68	Chain Grate
10,400	20	300	18	16.7	41	14,100	74	Roney
12,000	12	250	20	12.5	38	16,000	75	Taylor
15,600	24	250	21	11.9	45	17,600	89	Taylor

Flue Sizes. Formula (10) is appropriate for flues as well as for chimneys. As an example, find the draft loss in a straight brick flue 8 ft. high, 4 ft. wide, 200 ft. long, with gases at 550 deg., traveling at 30 ft. per second? Entering the lower scale of Fig. 95 with 32 square feet and proceeding vertically upwards to the curve of velocity of 30 feet per second, and then horizontally to the left-hand scale, the draft loss of 0.125 is read. Entering the upper scale with a temperature of 550 degrees, and proceeding as directed on the previous page, a multiplier of 0.89 is obtained, and applying this to 0.125, a draft loss of 0.111 is found. This is for 100 feet, so that for 200 feet the loss is 0.222. But this loss is for a circular flue. The ratio of sides is 4 : 8 or 1 : 2 for which the multiplier is 1.09, and applying this to 0.222, the draft loss for the conditions laid down is found to be 0.24 inch.

Draft Required for Coal

THE draft required at the base of the chimney is the sum of the draft losses caused by the resistance of the fuel-bed, boiler setting, economizer (if there is one), flues and dampers, and the draft absorbed in setting the gases in motion.

Fig. 96 will give the number of pounds of coal which will be burned per boiler-horsepower-hour. This should be confirmed by the expected evaporation per pound of fuel, by taking the appropriate point on the evaporation curve and then moving vertically to the coal curve, where, for example, an evaporation of 10 lb. of water is seen to necessitate burning 3.45 lb. of coal per boiler-horsepower per hour.

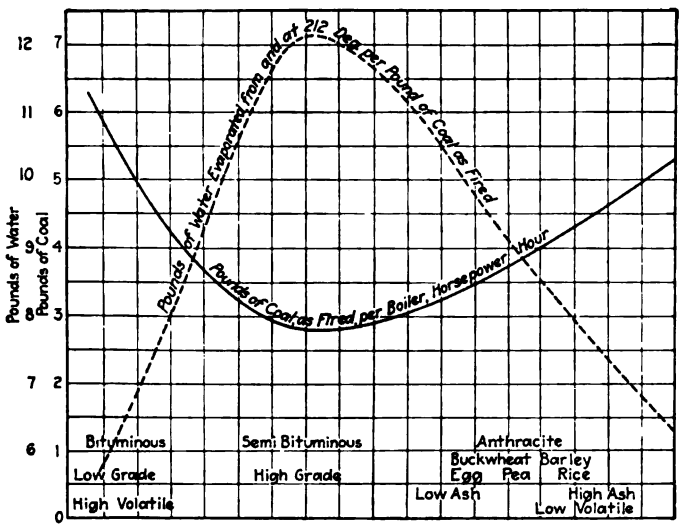

Fig. 96. Quantity of Coal Required for Given Quantity of Water Evaporated.

Knowing the weight of coal to be burned per hour and dividing it by the total grate area, the number of pounds to be burned per square foot per hour is obtained. Fig. 97 shows the draft required through the fuel-bed. The curves have been plotted from a large number of boiler tests and represent good general practice. Reference should also be made to Chapter 2 on BOILERS.

The draft loss through a regular Heine Boiler setting is given by Fig. 98, for both one and two passes. With poor management, allowing excess air, the draft required will be greater. Fig. 98 is based on the use of 12 cu. ft. of air per horsepower per minute. It can also be used to show the increase of draft necessitated by an increase of air due to poor firing or leaks. Suppose that 15 cu. ft. of air per horsepower per minute is used instead of 12. Then the air used is 15/12 or 125 per cent of that forming the basis of the chart. The actual proportion of rated horsepower developed is multiplied by 125 per cent to find the draft necessary. If the boilers are running at 120 per cent of rating, $120 \times 125 = 150$ per cent, and the draft required is read for a single pass boiler as 0.28 inch.

For cross or vertically baffled boilers, a sufficiently close approximation is obtained by adding 10 to 20 per cent to the draft loss read from Fig. 98.

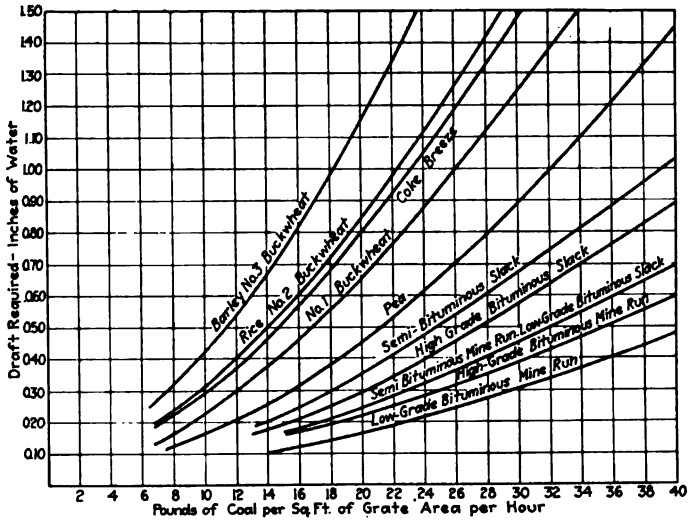

Fig. 97. Draft Required Through Fuel Bed for Different Grades of Coal.

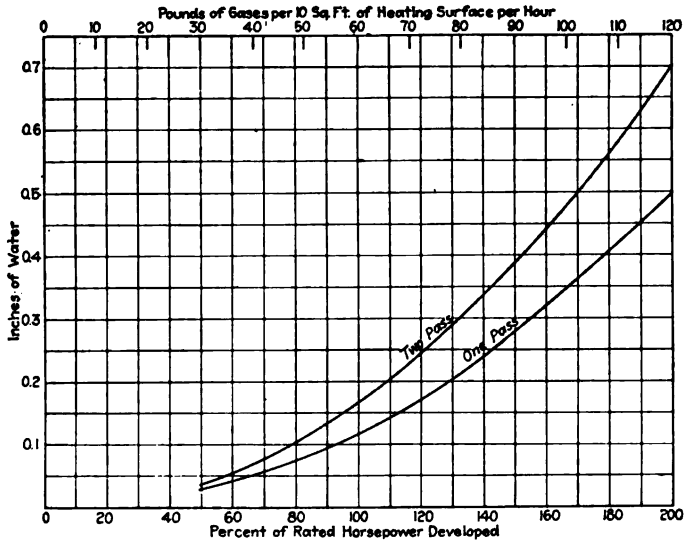

Fig. 98. Draft Loss Through a Regular Heine Boiler Setting, Compared for One and Two Passes.

The draft loss through economizers 5 to 8 ft. wide can vary between 0.02 and 0.5 in. for each 10 ft. of length. They are generally built long and narrow with tubes 9 to 12 ft. high, because their efficiency is greater as the speed of the gases is increased, as is shown in discussing heat transfer in Chapter 11. The draft loss can be computed from

$$h = \frac{(6.606)}{10^{22}} W^2 NT \qquad (11)$$

h = Draft loss, inches of water
W = Weight of gases, pounds per hour, divided by the number of lineal feet of pipe in each economizer section.
N = number of economizer sections.
T = mean absolute temperature of gases, degrees.

The draft loss through breechings and flues can be taken as 0.1 in. of water per 100 ft. length and 0.05 in. for each right angle turn, if the area is about 20 per cent greater than that of the stack.

The loss due to altering the speed of the gases at each abrupt enlargement and change of shape is:

$$h = 0.125 \frac{(V_1 - V_2)^2}{T} \qquad (12)$$

h = Draft loss, inches of water.
V_1 and V_2 = Different velocities, feet per second.
T = Absolute temperature of gases, degrees

In long flues having several sudden enlargements, changes in form of cross-section and sharp turns, the loss may be considerable.

The draft lost in accelerating the gases is:

$$h = 0.125 \frac{V^2}{T}$$

For a gas temperature of 500 deg., this becomes

$$h = \frac{V^2}{7680}$$

The following are values of draft lost in producing velocity for practical conditions:

Velocity, feet per second	20	30	40	50	60
Draft loss, inches of water	0.05	0.12	0.21	0.33	0.47

The foregoing draft losses should be tabulated for any given case, showing the assumptions on which they are based, as in the following example:

Fuel-Bed Resistance

Boilers, 200 H.P. Grate area, 40 sq. ft. Good bituminous run of mine coal. Say 3.75 lb. of coal per hour per horsepower, as in Fig. 96. Boilers to operate at rated capacity 200 × 3.75 = 750 lb. of coal per hour per boiler. Divide by 40 sq. ft. of grate = 19 lb. per sq. ft. per hour. Read from Fig. 97 ..... 0.21

Boiler Resistance

If single-pass Heine boilers, read from Fig. 98 as 0.12. If desired, allow 20 per cent for more air, reading draft at 120 instead of 100 per cent 0.18

Breechings and Flues

Flue 80 ft. long at 0.10 per 100 ft. gives 0.08 and two bends at 0.05 each, 0.10. Tapers where required, no abrupt enlargements 0.18

Velocity of Gases

Say 25 ft. per second so that $\frac{25^2}{7680}$ gives 0.08

Minimum draft at chimney base necessary to operate the plant 0.65

St. Joseph Lead Co., Rivermines, Mo., operating 7000 H. P. of Heine Standard Boilers.

Chimney Sizes as Determined by Gas

IN departing from ordinary conditions, for which Kent's table was designed, it is well to make calculations on the basis of the quantity of gas to be dealt with, rather than on weight of fuel or horsepower. The quantity of gas can be based on the heat value of the coal, as recommended by *V. J. Azbe.* It has been shown that the weight of air required per 10,000 B. t. u. generated, varies with the available hydrogen in the fuel from 7.65 lb. for anthracite to 7.04 for oil. In solid fuel the maximum variation from 7.6 is less than ± 1 per cent. Therefore, while the weight of air per pound of coal will vary greatly with its heat value, the weight of air per horsepower for 100 per cent boiler and furnace efficiency will remain constant at 25.4 lb., and the weight of flue gases at about 31 pounds. Dividing this by the efficiency, we have the weight of gas per hour per horsepower developed. Following are the weights of gases for different fuels:

	Efficiency, per cent	Weight of Gases, lb. per hr. per H.P.
Anthracite	65	48
Semi-Bituminous	60	52
High grade Bituminous	55	56
Illinois Bituminous, poor	50	62
Oil	70	42

The volume of the gases at any temperature is obtained by dividing the total weight by the weight per cubic foot as read from Fig. 93. Dividing this volume by 3600 times the chimney or flue area, will give the velocity in feet per second.

The following have been recommended as economical velocities, considering the total quantity of gases:

Gases, lb. per hr.	Velocity, feet per second
1,700	10
8,300	15
25,000	20
83,000	25
200,000	30
415,000	35
830,000	40
1,330,000	45

These velocities should be considered only as approximate. The draft losses should be determined for several velocities with different sizes of chimney so that the most economical can be chosen.

Chimneys for Oil, Gas and Wood

GENERALLY the sizes of chimneys calculated on a gas basis are much smaller than those found from Kent's table. Ample allowance should be made for driving boilers above their rated power, poor coal, poor firing, leakage of air through brickwork and from idle boilers.

With *oil burning* excessive draft is more wasteful and more likely to occur than with coal. Undue chimney height and capacity must therefore be avoided. The loss of draft through the burners, boiler setting and flues is considerably lower than for coal, because the weight of gases per horsepower is less; the weight per pound of fuel is greater, however, as shown in Fig. 91. The temperature of the gases is lower, so that oil-stacks produce less draft than coal stacks. The burners, however, give somewhat of a forced draft effect. Defective draft is also to be avoided, since pressure within the boiler setting generally causes rapid deterioration of brickwork. Owing to the smaller quantity of gases, the chimney diameter should be smaller.

C. R. Weymouth observes that the necessary height for oil chimneys is much less than ordinarily supposed when boilers are operated at rating, and considerably greater at heavy overloads.

The sizes of oil chimneys should be based on the maximum load and the draft resistance due thereto, rather than on the rated horsepower of the connected boilers. Table 11 is based on the horsepower developed (not on rated horsepower of boilers, as was Table 9 for coal) when the boilers are being operated at 150 per cent of rating. It is a modification of C. R. Weymouth's table for plants at sea-level, assuming temperature of air as 80 deg. and of gases as 500 deg. With properly designed connections and short flues, the sizes given will be found satisfactory.

Table 11. Chimney Sizes for Oil-Burning Plants.

	HEIGHT ABOVE FLOOR LINE, FEET								
Dia. In.	80	90	100	110	120	130	140	150	160
30	206	249	280	304	324	340	354	366	377
33	356	310	349	381	405	426	444	459	472
36	312	379	427	466	497	523	545	564	581
39	376	455	514	561	599	631	657	681	701
42	443	539	609	665	711	749	782	810	835
45	518	630	713	779	834	879	918	952	981
48	599	729	827	904	967	1,020	1,070	1,110	1,140
54	779	951	1,080	1,180	1,270	1,340	1,400	1,460	1,500
60	985	1.200	1,370	1,500	1,610	1,710	1,790	1,860	1,920
66	1,220	1,490	1,700	1,860	2,000	2,120	2,220	2,310	2,390
72	1,470	1,810	2,060	2,260	2,430	2,580	2,710	2,820	2,910
78	1,750	2,150	2,460	2,710	2,910	3,090	3,250	3,380	3,500
84	2,060	2,530	2,900	3,190	3,440	3,650	3,840	4,000	4,150
90	2,390	2,950	3,370	3,720	4,010	4,260	4,480	4,670	4,850
96	2,750	3,390	3,880	4,290	4,630	4,920	5,180	5,400	5,610
102	3,140	3,870	4,440	4,900	5,290	5,630	5,930	6,190	6,430
108	3,550	4,380	5,020	5,550	6,000	6,390	6,730	7,030	7,300
114	3,990	4,920	5,650	6,250	6,760	7,200	7,590	7,930	8,250
120	4,440	5,490	6,310	6,990	7,560	8,060	8,490	8,890	9,240

Analysis of figures on several oil chimneys shows the height to be between 100 and 180 ft.; the diameter 1/10 to 1/15 of the height, depending upon local conditions; one square foot of chimney area serves 40 to 50 rated horsepower of boilers.

The general practice of engineers on the Pacific Coast, states *George Dorward,* is to use 50 per cent of the area as stated in *Kent's* table for stacks for coal. For *Heine* boilers up to 200 H.P., stacks not in excess of 60 ft. in height from the boiler room floor line to the top of stack, are the general practice. Over 200 H.P. the same rule is used, i. e., 50 per cent of the area as stated by Kent, and not in excess of 80 ft. in height. This practice, it has been found, works very successfully.

With *blast furnace gas,* the volume of chimney gases is greater and at a higher temperature than with coal, so that stack diameters are about the same. The draft loss through horizontally baffled boilers runs from 0.6 to 0.9 in. when operating at capacities up to about 175 per cent of rating, which are attained in practice with chimneys from 115 to 140 ft. high.

As in oil-burning chimneys the height and capacity should be determined by the draft requirement at maximum capacity. Excessive and defective draft should be avoided as causing waste and setting deterioration respectively.

When *burning wood,* economy of operation is not easily realized; large quantities of excess air and high stack temperatures are not uncommon. Compared with coal burners, wood burning chimneys can be much lower. Owing to the greater volume of gases, the diameter should be 10 per cent greater than for coal.

Because of the variations in the properties of different kinds of wood, variations in size and wetness, and different methods of firing, draft losses through the fuel-bed and boiler setting can be approximated only.

Wood burning chimneys are best located directly on top of the boiler, to avoid accumulations of unburned particles that might otherwise be deposited in the base of the stack. Such deposits have been ignited, thus destroying the stacks. If such accumulations cannot be avoided, the lower part of the stack should be lined with firebrick.

Municipal refuse destructors and *garbage incinerators* should have chimneys at least 200 ft. high to meet popular demand that the effects of odors be eliminated. High-temperature destructors operated under forced draft do not require such heights to take care of the draft; and with proper handling, no objectionable odors are emitted.

Owing to variation in the proportion of combustible matter and water in the refuse of different cities, and the frequent use of coal or oil when only the garbage is burned, no general figures on draft requirements are possible. For any particular city, these proportions are usually known or ascertained sufficiently closely so that boiler and chimney sizes can be determined. Unsorted municipal refuse as collected averages one-third carbon, one-third ash, and one-third water. Boilers and chimneys based on this proportion will give satisfactory results.

Evasé or Venturi Chimneys are used to a limited extent in Europe and a few have been installed in this country. Fig. 99 is diagrammatic and explains the system, which is identical with that of jet-blowers and exhausters.

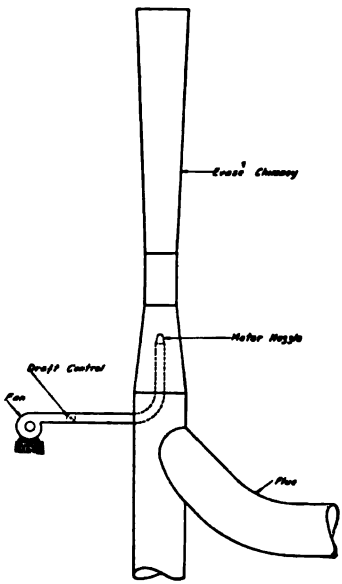

Fig. 99. Evasé Chimney.

A fan supplies air for the motor jet, which creates a greater vacuum at the chimney base than the vacuum due to the natural draft of the chimney. Roughly speaking, the ratio between the vacuum at the chimney base and the air pressure at the motor jet equals the ratio between the area of the air nozzle and the area of the throat of the chimney. This ratio may be conveniently made from 1 : 6 to 1 : 10.

Usually each stack is connected to one or two boilers. Therefore, since the throat diameter is kept small, such stacks may be made only 50 to 75 feet high without disturbing the proper proportions.

With the low stack height and small throat diameter, only light loads are carried on natural draft, and the motor jet is used for the higher ratings. The draft may be controlled either by varying the area of the motor nozzle, or by varying the air pressure with a damper in the air pipe, or by using a variable speed motor to drive the fan.

Chimneys at Altitudes

AT *high altitudes* the specific gravity of the gases is B/30 of the specific gravity at sea level, where B is height of barometer in inches due to altitude, which may be read from Fig. 100; therefore their velocity through the fuel-bed, boiler setting and economizer must be increased by $30/B$ in order to deal with the same weight of gases. Since the draft loss varies as the square of the velocity and as the specific gravity of the gases, it will be $30/B$ or R times the draft loss at sea-level. This ratio is given in one of the curves of Fig. 100 or can be calculated.

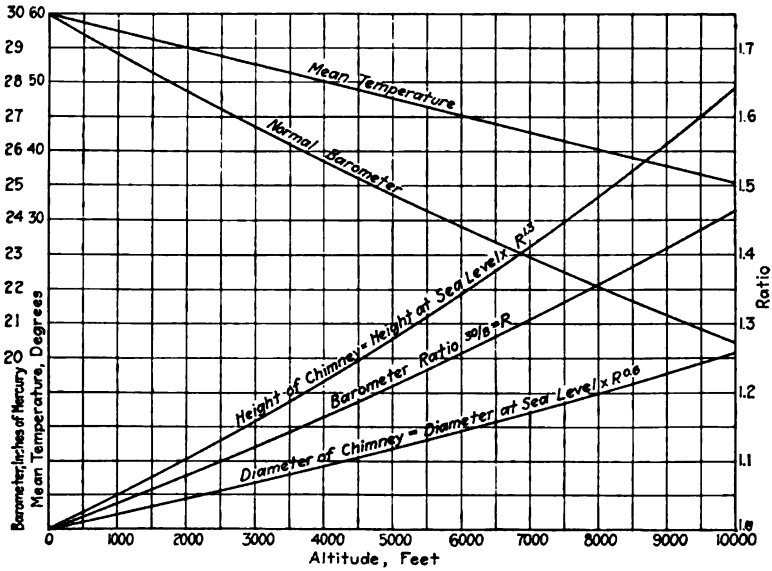

Fig. 100. Factors to be Used in Calculating Draft Losses in Chimneys at High Altitudes.

The draft lost in giving velocity to the gases and at sudden enlargements is $B/30$ of that lost in giving the same velocity at sea-level.

For the same draft loss with the same length of flues, their diameter (or equivalent diameter) must be increased $R^{0.6}$. But it will simplify mat-

ters to make this increase the same as the increase of chimney diameter, the flue area continuing to be 20 per cent greater than that of the chimney. The draft loss through the flues will then be a little less than at sea-level.

The draft power of the chimney is primarily $B/30$ of that at sea-level. But the normal temperature, being less than at sea-level, reduces this ratio. The height necessary to give the same draft at the base would have to be increased as $30/B$, nearly. But the increased height is accompanied by a lower average temperature within the chimney and by an increased friction loss due to the increased height. Also, the draft *required* at the chimney base is increased as $30/B$ less the advantage derived from the larger flues mentioned above. If the diameter of the chimney is not changed, the velocity is greater with still more friction loss.

From a careful analysis of these changes, compared with results in actual practice, it is recommended that the height be increased as $(R^{1.3})$, and the diameter as $(R^{0.6})$. Curves are drawn in Fig. 100, giving both of these ratios.

Take the example set forth in tabular form on page 187, resulting in a chimney say 150 ft. by 66 in. diameter at sea-level, and assume that the plant is to be at an altitude of 5000 feet. From Fig. 100, read $R^{1.3}$ as 1.28 and 150×1.28 equals 192 feet. Read $R^{0.6}$ as 1.12 and $66 \times 1.12 = 74$ in. diameter.

The figures for any given design should be checked as follows: A table like that on page 187 should be prepared, showing the draft necessary at the stack base, the barometer ratio R being considered. The static draft of the stack of the sizes derived as in the last paragraph should be calculated, taking the gas temperature average from Fig. 92. The weight of air and gas taken from Figs. 93 and 94 are divided by R from Fig. 100 and their difference, multiplied by the height of the stack and by 0.192, is the static draft in inches of water. The friction loss is now read from Fig. 95 or calculated from the formula (10) and corrected by dividing by R. It is then deducted from the static draft, giving the available draft at the base of the stack, which can be compared with that required.

As the altitude is increased, the height of the chimney increases faster than its diameter; consequently the proportion of diameter to height will sometimes become unmanageable. This can be overcome by increasing the grate area or by the use of induced or forced draft.

Chimney Construction

CHIMNEYS for modern power houses and industrial plants are made of steel plate, radial brick or reinforced concrete, either lined or unlined, and are usually of circular cross section. For the same area a round chimney has a greater capacity; its shape requires the least weight for stability, and presents the least resistance to the wind. A maximum wind velocity of 100 m. p. h. is used in the design of such stacks, the equivalent pressure being taken at 50 lb. per sq. ft. for flat surfaces, and 30 lb. per sq. ft. of projected area of circular stacks.

The following notes deal only with the practical features that must be considered in selecting the type of stacks. The structural design of a chimney, including calculations for foundation, stability and strength, is an intricate subject, which is a study for the chimney specialist.

Chimney foundations are usually made of concrete in a mixture of 1 part cement, 2½ parts sand, and 5 parts broken stone or gravel, and poured in a "wet" condition in layers 6 to 8 in. thick, which are thoroughly rammed into place. The safe bearing load for ordinary soil is 2 tons per square foot, because the chimney represents a concentrated weight on a small area. This is considerably lower than the loads permissible in building construction.

Foundations for brick chimneys are not as massive as the foundations used for steel and reinforced concrete stacks, because they function only as supports of the chimney column. In steel and concrete construction the foundation acts both as a support and anchor for the stack, the two forming practically one mass, giving the desired stability. Reinforcing bars are frequently used.

Table 12 indicates the proportions of foundations necessary for self-supporting steel and radial block stacks. The least depth and width of square or block foundations are considered. In steel stacks with a foundation having tapering sides, the widths at the top should not be reduced more than 3 or 4 ft. over those given in the table. For normal soil, the foundations supporting brick stacks can be battered or stepped off, using the widths given as the size of the bottom slab. The top slab should be at least a foot wider than the stack, all around, and the offsets made so that a line drawn along the edge of foundation will make an angle of 60 deg. with its base.

Table 12. Dimensions of Concrete Foundations For Brick and Steel Stacks

Stack		Radial Brick		Self-Supporting Steel	
Diameter, Feet	Height, Feet	Width, Feet	Depth, Feet	Width, Feet	Depth, Feet
4	100	12	4½	16	6
5	125	16½	5	20	7
6	150	20	6	23	8
7	175	24½	7	26	8½
8	200	29	8	29	9½
9	200	30	8	31	10
10	200	31	9	32	10½

In poor soil, it may be necessary to sink piles. These are usually spaced 2 to 2½ ft. on centers, and the tops cut off below the surface water line. A bed of concrete 2 or 3 ft. thick, into which the piles extend, is then formed as a base to receive the regular chimney foundation.

Self-Supporting Steel Stacks

SELF-SUSTAINING stacks as a rule are practically straight; that is, the walls above the flue openings are parallel. The base section can also be cylindrical. However, it is usually flared and includes the flue connection. The height of the bell-mouth base depends, therefore, upon the run of breeching and the location of the flue opening. When the flared part is one-quarter of the stack height, the sides take the slope of a cone having its apex on the center line along the top of the stack. This flared base has a diameter about one-third greater than the stack proper, permitting the connection of a larger flue, and the entry of the flue gases with the least interference.

The flue opening in the plate of the chimney base weakens the structure, and requires reinforcing. Stiffening members across the top and bottom of the opening are sometimes used. More often the cut-away section is strengthened by angle or T-shapes riveted to the sides and extended beyond the top and bottom of the opening, or a combination of these methods can be used to reinforce the flue opening all around.

The flanged base plate riveted to the bottom of the base section is generally made of two or more cast iron segments. More modern practice calls for a built-up steel base ring. Equally spaced around this are lugs drilled for the anchor bolts that hold the stack down to its foundation.

Above the base the stack is divided into several sections, each consisting of from five to twelve courses, 4 to 7 ft. high. Each course is made up of one or more sheets, depending upon the stack diameter. Lap joints are invariably used for vertical seams and often for girth seams; the latter are also made with butt joints either inside or outside of the shell. Frequently intermediate courses have lap joints, but the sections are assembled with butt joints that reinforce the stack. In unlined stacks, an outside butt joint is preferred as it leaves the stack smooth on the inside. In lined stacks, the inside connections can be utilized to support the brickwork. Butt joints can be made either with the ordinary straps, or else flanged with angles riveted to the shell and bolted together. The riveting is generally figured on a factor of safety of four as a minimum.

It is a moot question whether self-supporting steel stacks should be lined. The brick lining does not add to the strength of the chimney, although often the stack must carry it. Sometimes the lining is isolated and made self-supporting, acting as an inner core. Moisture may collect in the air space formed between the lining and the shell, thus promoting corrosion. The lining reduces radiation and protects the steel from the corrosive action of the chimney gases.

When a lining is used in a steel stack it should be carried up the full height. Radial firebrick, common brick, concrete and sometimes a filler of sand for the air space provided by independent linings are used for lining construction. Generally a 4-in. wall supported by an angle iron ring fastened to the stack every 15 to 20 ft. will serve. The lower section of stack can be lined with firebrick, and the upper section with common brick, using fire clay and cement mortar joints respectively. For an independent lining 8-in. brick will be required for the lower half of the stack and 4-in. brick for the upper half. The brick can be set close to the shell, or an air space of 1 to 2 in. left between the steel and the brickwork.

To preserve the stack, the steel is usually given one coat of paint on both surfaces before erection. After the stack is in place, it is usually treated with two or three coats of heat-resisting paint. This is intended to protect the stack from the corrosive action of the atmosphere as well as to prevent air inleakage.

To maintain the stack a painter's ring should be fitted near the top. This consists of a circular metal track with trolley and block to facilitate painting. In the base of the stack a cleanout door should be provided for access to the interior and for the removal of soot and cinder accumulation. Standard size cleanouts measure 24 by 36 in. and are made of either heavy cast iron or steel plate fitted with frames, hinges and clamps. The contact surfaces should be planed so that the door will be air-tight when closed. It is also advisable to install a steel ladder extending from the base to the top of the stack. This can be on the inside, although it is generally placed on the outside about 8 in. from the stack and fastened to the shell through riveted bracket connections. Ladders are frequently built with 3-in. side bars, ½ in. thick, with rungs or steps of ¾-in. round iron, 15 to 18 in. long, and spaced 12 to 15 in. on centers. In fastening the ladder to the stack, care must be taken to prevent strains due to the unequal expansion and contraction of the steel shell and the ladder.

Table 13 illustrates the size and sections and thickness of plate used in the construction of self-supporting stacks. Other instances of good practice are afforded by the stacks serving some of the large central stations.

Four steel stacks in an electric light plant, each 297 ft. above the boiler grates and 21 ft. in diameter, are made of ¾-in. and ⅜-in. steel plate in courses 7 ft. high. Ten vertical stiffening posts of 6 by 4 in. angle iron are riveted to the inside of each shell. At each 20 ft. of height two angle irons support a stack lining, which consists of 1-in. concrete and 4-in. red brick for the entire height. An 18-in. steel ladder on the outside gives access to

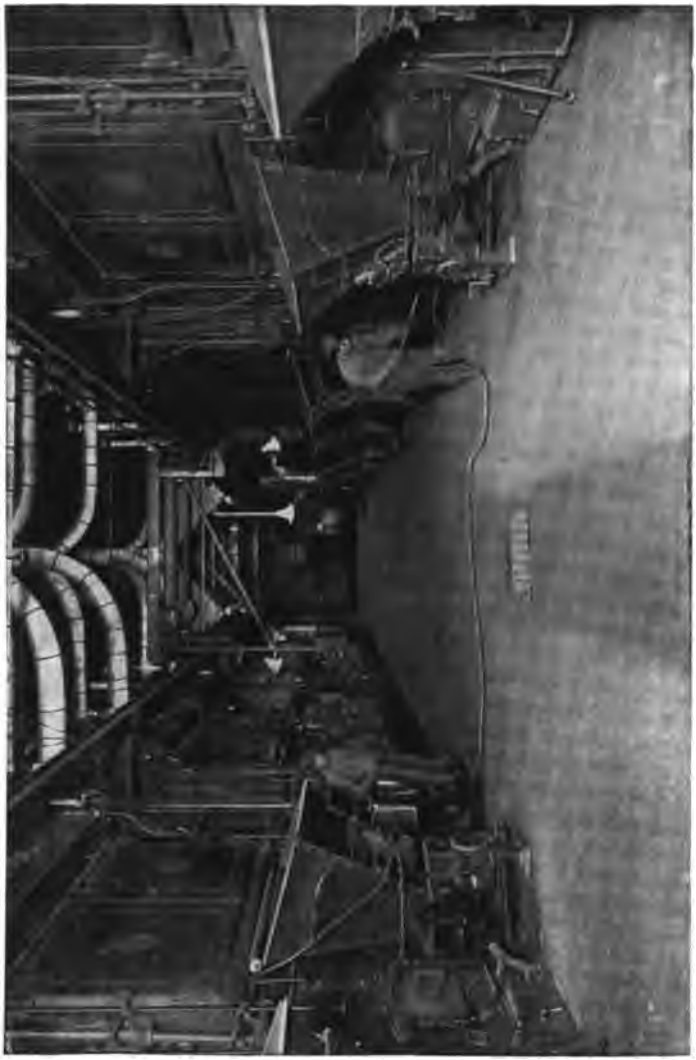

4350 H. P. of Heine Standard Boilers equipped with Combustion Engineering Corp. Type E Stokers, in the Niagara, Lockport & Ontario Power Co., Lyons, N. Y.

Table 13. Plate Dimensions For Self-Supporting Steel Stacks

Diameter, Inches	Total Height, Feet	Bottom Section, Including Flare		2nd Section		3rd Section		4th Section		5th Section	
		Height Feet	Plate Inches	Height Feet	Plate Inches	Height Feet	Plate Inches	Height Feet	Plate Inches	Height Feet	Plate Inches
54	100	40	5/16	30	1/4	30	3/16	.....	.....	.....	.....
66	165	30	3/8	50	5/16	45	1/4	40	3/16	.....	.....
78	185	65	3/8	60	5/16	60	1/4	.....	.....	.....	.....
120	200	50	3/8	60	5/16	90	1/4	.....	.....	.....	.....
132	225	85	7/16	20	3/8	25	5/16	95	1/4	.....	.....
144	250	80	1/2	30	7/16	30	3/8	30	5/16	80	1/4

each stack, and a gallery or grated walkway with hand railing is placed around the top. The stacks rest on plate girders that are part of the building construction, and are also braced against swaying and wind action.

In a street railway plant the two steel stacks, each serving 16 boilers, are supported and braced by the framing of the building. The stacks are 132 ft. in height above the foundation and are made in three sections of 5/8-in., 1/2-in. and 3/8-in. steel plate, each 44 ft. high. An 8-in. red brick lining, backed by 1-in. cement, is supported every 25 ft. on rings that stiffen the stacks.

Another central station has three stacks, each 260 ft. high and 22 ft. diameter. The support and wind bracing is furnished by the building construction. Five sections varying in thickness from 7/16 to 1/4-in. plate make up the height. At each section an angle iron stiffener and Z-bar ring support the lining, which is of 4-in. red brick backed with 1 in. of concrete.

The details of a self-supporting steel stack for moderate size plants are shown in Fig. 101. This stack, which was designed and fabricated by the *Chicago Bridge & Iron Works,* is 13 ft. diameter and 185 ft. high. It is made up of 32 courses in five sections, including the base with the flue opening. Each course consists of three sheets and is about 5 ft. 9 in. high. The thickness of plate varies from 1/4-in. at the top to 3/8-in. at the bottom. The stack is anchored to a concrete foundation on top of which is a sectional cast iron base 2 in. thick, in 12 segments. Immediately above the base ring and riveted to the base of the stack are 24 built-up steel plate lugs that hold the anchor bolts.

The base section is conical or tapered, 18 ft. high and 19 ft. diameter. The first parallel or cylindrical plate course above this is 13 ft. 1 1/4 in. while the last course at the top is only 1 in. less inside diameter. The individual courses 7 ft. high. Ten vertical stiffening posts of 6 by 4 in. angle iron are the different girth seams. In the base section a flue opening 7 by 20 ft. is reinforced by plates and angles to strengthen the cut-away part of the stack. A steel ladder on the outside extends the full height. It is 14 in. wide with side bars 2 by 3/8 in., and rungs of 5/8 in. square iron. The ladder is strapped to the shell at the top of every second course, 8 in. from the stack.

Guyed Steel Stacks

THE guyed or supported steel stack is designed to simply carry its own weight. Stability or resistance against wind pressure is cared for by fastenings to adjoining walls or by guy wires. Guyed or supported stacks do not require heavy foundations, because they are much lighter than self-supporting stacks. Usually they are riveted to the smoke breeching or else are connected with the smoke up-take and with the boiler setting.

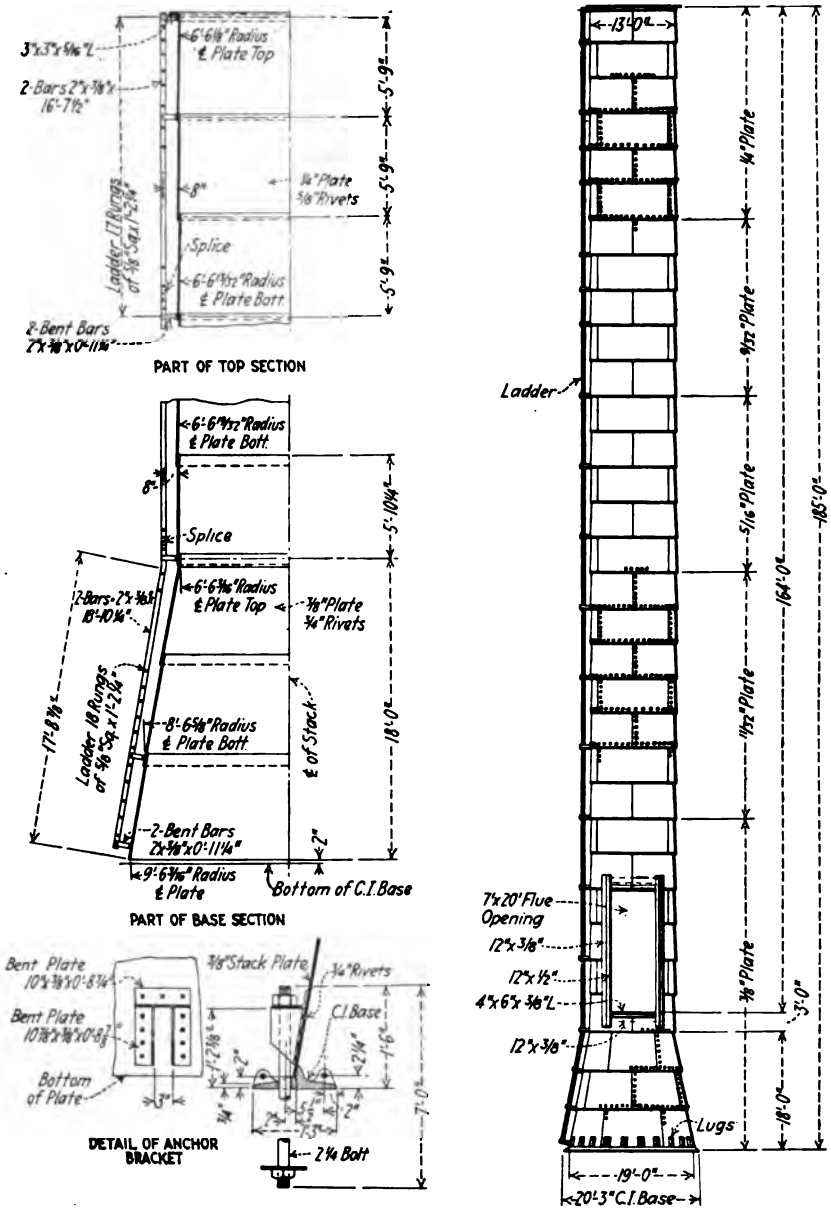

Fig. 101. Construction Details of a Self-Supporting Steel Stack.

The thickness of plate used varies considerably and is largely governed by the degree of permanence required. Corrosive action by the elements and stack gases gradually reduce the thickness of the sheets until the stack is no longer safe.

The thickness of plate is ordinarily kept within the limits given in Table 14.

Table 14. Dimensions of Guyed Steel Stacks.

Diameter Inches	Thickness of Plate	
	Maximum	Minimum
30	No. 8 gage	No. 10 gage
36	$^{3}/_{16}$ in.	No. 10 gage
42	¼ in.	No. 10 gage
48	¼ in.	No. 8 gage
54	$^{5}/_{16}$ in.	$^{3}/_{16}$ in.
60	$^{5}/_{16}$ in.	$^{3}/_{16}$ in.

The size of rivets used should be:

⅜ in. diameter for No. 10 and No. 8 gage plate.
$^{7}/_{16}$ in. diameter for $^{3}/_{16}$ in. plate.
$^{7}/_{16}$ or ½ in. diameter for ¼ in. plate.
½ or ⅝ in. diameter for $^{5}/_{16}$ in. plate.

The circumferential pitch is generally made equivalent to one rivet for each inch of diameter of the stack or $3^{1}/_{7}$ in. pitch, and the longitudinal pitch is made 3 to 4 inches.

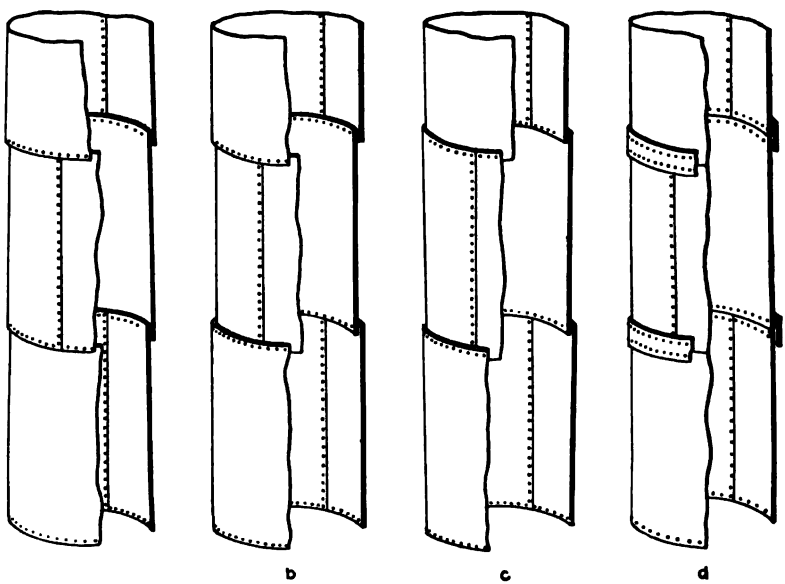

Fig. 102. Styles of Joints for Guyed or Supported Steel Stacks.

It is common to make the plates thinner in the upper portion of the stack. As the corrosive action is more energetic at the top, many prefer to make the upper part thicker than the lower, or at least to keep the thickness the same for the full height.

The plate courses may be assembled as shown in Fig. 102, in which the "shingle" lap (a) is composed of tapered sections and is designed to shed water. In joints like (b) the larger sections slip over the ends of the smaller sections and all the sections are parallel or cylindrical.. With another method (c) the lower end of the upper course slips into the lower course. Sometimes a strap-joint (d) is used, in which the ends of sections are butted together and a steel band placed around the joint and riveted to each plate, making a very strong but much more expensive chimney.

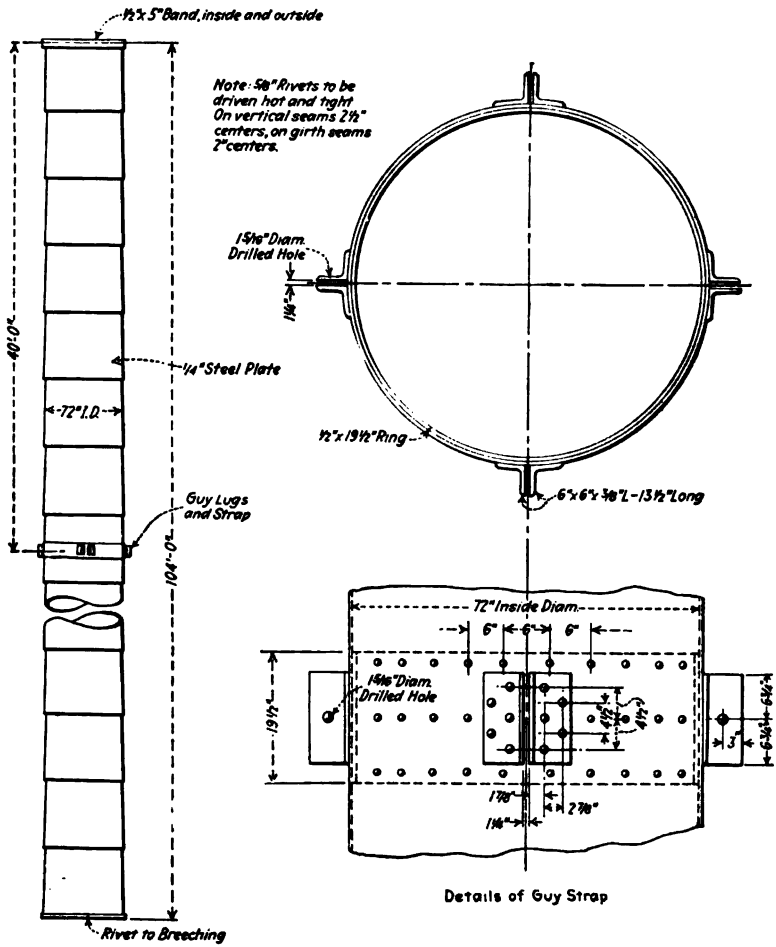

Fig. 103. Construction of a Guyed Steel Stack.

While each of these methods have their advocates, the best practice appears to be indicated by (c). With (a) the seams cannot be made tight, and water from the inside of the stack leaks through, and corrodes and discolors the outside. With (c) the joints are easily filled with paint and made perfectly tight, so that corrosion is reduced to a minimum.

Guys should be of not less than ½ in. wire rope. Each guy should have a turnbuckle to take up slack and equalize tautness. The anchorage, whether "dead men" or buildings, must be such that there is no possibility of failure in the highest wind. The guys are attached to the stack either by eyebolts, with reinforcing plates inside, or by a guy-ring, carried around the stack in sections whose ends are bent out to form lugs. While the guy ring is the strongest construction when new, corrosion appears to concentrate about it, and so weakens the stack that the eyebolt method is perhaps the strongest permanently.

The number of guys and their arrangement depends upon the height of the stack. Low stacks up to 50 or 60 feet may have one set of three or four guys. Over 60 feet, there should be two sets of four guys each, and stacks over 125 feet usually have three sets of four guys each. The upper or single set is generally attached to the stack about 12 feet below the top. When there are two sets of guys, the lower set is attached about 2/3 of the height from the ground to the upper set. When there are three sets of guys, the upper set is attached about 12 feet from the top, the lower set at about half the height of the upper set, and the middle set about half way between the upper and lower sets.

Guys are commonly anchored at a distance from the base equal to the height of the guy band, so that they are stretched at an angle of 45°. When two or three sets of guys are used, the upper set may be arranged to form an angle of only 60° with the vertical.

In congested city sections, stacks are often fastened to building walls by brackets or strap-iron anchors. Stiff guys may be made of 2 in. pipe for stacks up to 75 feet high, and of 3 in. pipe for higher stacks. All stiff guys should be well braced against bending unless they are very short.

A guyed stack of ¼-in. steel plate, built by the *New York Central Iron Works*, is shown in Fig. 103. It is intended for direct connection to the smoke flue. This stack has an inside diameter of 72 in. and is 104 ft. high overall. Each course is 5 ft. high and is made with lap-joints single riveted. At about 40 ft. from the top a heavy ring is fastened to the stack, reinforcing it to receive the lugs for the guy wires. The top is finished with a steel band on the outside and reinforced with another band on the inside.

Radial Brick Chimneys

COMMON brick is seldom used for chimney walls except for small house-heating plants. Larger stacks have walls of vitrified hollow or perforated brick formed to occupy a certain position in the circular and radial lines of the chimney. It is said that the perforations in the brick form a dead air space, which reduces the loss from radiation and prevents sudden temperature changes within the stack. These radial blocks are larger than common brick and are made in sizes and shapes for all diameters. The method of laying and bonding as used in *Heinicke* chimneys, and some of the shapes used in *Custodis* construction, are illustrated in Fig. 104.

The brick are laid in cement lime mortar, with ½ in. joints, to give a straight batter or taper from top to bottom. The outside surface is invariably smooth while the inside surface sometimes has a series of steps, owing to the change in wall thickness of the different sections of the chimney wall. Starting with a thickness of one brick, or about 7 in., at the top, the wall thickness is increased about 2 in. for each section, which is generally 20 ft. high. A circular chimney 200 ft. high would have an actual thickness of 24 in. at the base. The wall thicknesses, in

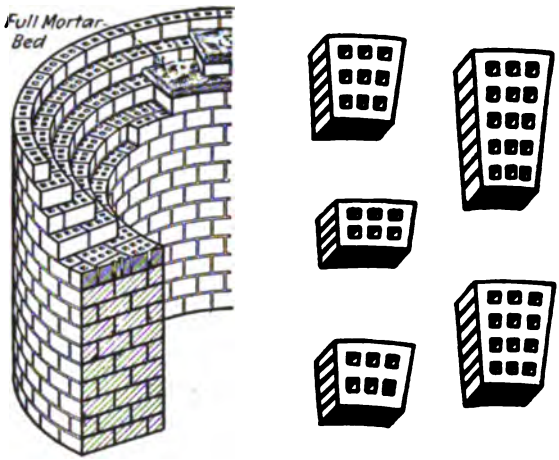

Fig. 104. Brick Bond in Heinicke Chimney and Different Shapes of Custodis Radial Brick.

Table 15. Outside Diameter (Feet) of Base of Brick Chimneys

Height of Chimney Feet	Internal Diameter at Top, Feet and Inches														
	3—0	3—6	4—0	4—6	5—0	5—6	6—0	6—6	7—0	7—6	8—0	8—6	9—0	9—6	10—0
75	7.42	7.69	7.96	8.46	8.96	9.46	9.96	.....	.....	.....	.....	.....	.....	.....	.....
80	7.80	8.04	8.27	8.70	9.13	9.58	10.02	.....	.....	.....	.....	.....	.....	.....	.....
85	8.18	8.38	8.58	8.95	9.31	9.70	10.08	.....	.....	.....	.....	.....	.....	.....	.....
90	8.57	8.73	8.88	9.18	9.48	9.81	10.13	.....	.....	.....	.....	.....	.....	.....	.....
95	8.95	9.07	9.19	9.43	9.66	9.93	10.19	.....	.....	.....	.....	.....	.....	.....	.....
100	9.33	9.42	9.50	9.67	9.83	10.04	10.25	10.75	11.25	11.75	12.25	.....	.....	.....	.....
105	9.70	9.78	9.85	10.03	10.21	10.38	10.55	11.03	11.50	11.95	12.40	.....	.....	.....	.....
110	10.06	10.13	10.20	10.40	10.60	10.73	10.85	11.30	11.75	12.15	12.55	.....	.....	.....	.....
115	10.43	10.49	10.55	10.77	10.98	11.07	11.15	11.58	12.00	12.35	12.70	.....	.....	.....	.....
120	10.79	10.85	10.90	11.14	11.37	11.41	11.45	11.85	12.25	12.55	12.85	.....	.....	.....	.....
125	11.16	11.21	11.25	11.50	11.75	11.75	11.75	12.13	12.50	12.75	13.00	13.50	14.00	14.50	15.00
130	.....	.....	11.65	11.88	12.10	12.12	12.13	12.47	12.80	13.09	13.37	13.80	14.22	14.69	15.15
135	.....	.....	12.05	12.25	12.45	12.48	12.51	12.81	13.10	13.42	13.73	14.08	14.43	14.87	15.30
140	.....	.....	12.45	12.63	12.80	12.85	12.90	13.15	13.40	13.75	14.10	14.38	14.65	15.05	15.45
145	.....	.....	12.85	13.00	13.15	13.22	13.28	13.49	13.70	14.08	14.46	14.66	14.86	15.23	15.60
150	.....	.....	13.25	13.38	13.50	13.58	13.66	13.83	14.00	14.42	14.83	14.96	15.08	15.42	15.75
155	.....	.....	13.58	13.73	13.87	13.97	14.06	14.18	14.30	14.68	15.06	15.19	15.31	15.61	15.91
160	.....	.....	13.92	14.08	14.23	14.35	14.46	14.53	14.60	14.95	15.30	15.43	15.55	15.81	16.07
165	.....	.....	14.25	14.43	14.60	14.73	14.86	14.88	14.90	15.22	15.53	15.66	15.78	16.00	16.22
170	.....	.....	14.59	14.78	14.96	15.11	15.26	15.23	15.20	15.49	15.77	15.90	16.02	16.20	16.38
175	.....	.....	14.92	15.13	15.33	15.50	15.66	15.58	15.50	15.75	16.00	16.13	16.25	16.40	16.54
180	.....	.....	.....	.....	.....	.....	.....	.....	15.80	16.05	16.30	16.40	16.50	16.65	16.80
185	.....	.....	.....	.....	.....	.....	.....	.....	16.10	16.35	16.60	16.68	16.75	16.91	17.06
190	.....	.....	.....	.....	.....	.....	.....	.....	16.40	16.65	16.90	16.95	17.00	17.16	17.31
195	.....	.....	.....	.....	.....	.....	.....	.....	16.70	16.95	17.20	17.23	17.25	17.41	17.57
200	.....	.....	.....	.....	.....	.....	.....	.....	17.00	17.25	17.50	17.50	17.50	17.67	17.83
205	.....	.....	.....	.....	.....	.....	.....	.....	.....	.....	.....	.....	17.80	17.98	18.16
210	.....	.....	.....	.....	.....	.....	.....	.....	.....	.....	.....	.....	18.10	18.30	18.50
215	.....	.....	.....	.....	.....	.....	.....	.....	.....	.....	.....	.....	18.40	18.62	18.83
220	.....	.....	.....	.....	.....	.....	.....	.....	.....	.....	.....	.....	18.70	18.94	19.17
225	.....	.....	.....	.....	.....	.....	.....	.....	.....	.....	.....	.....	19.00	19.25	19.50

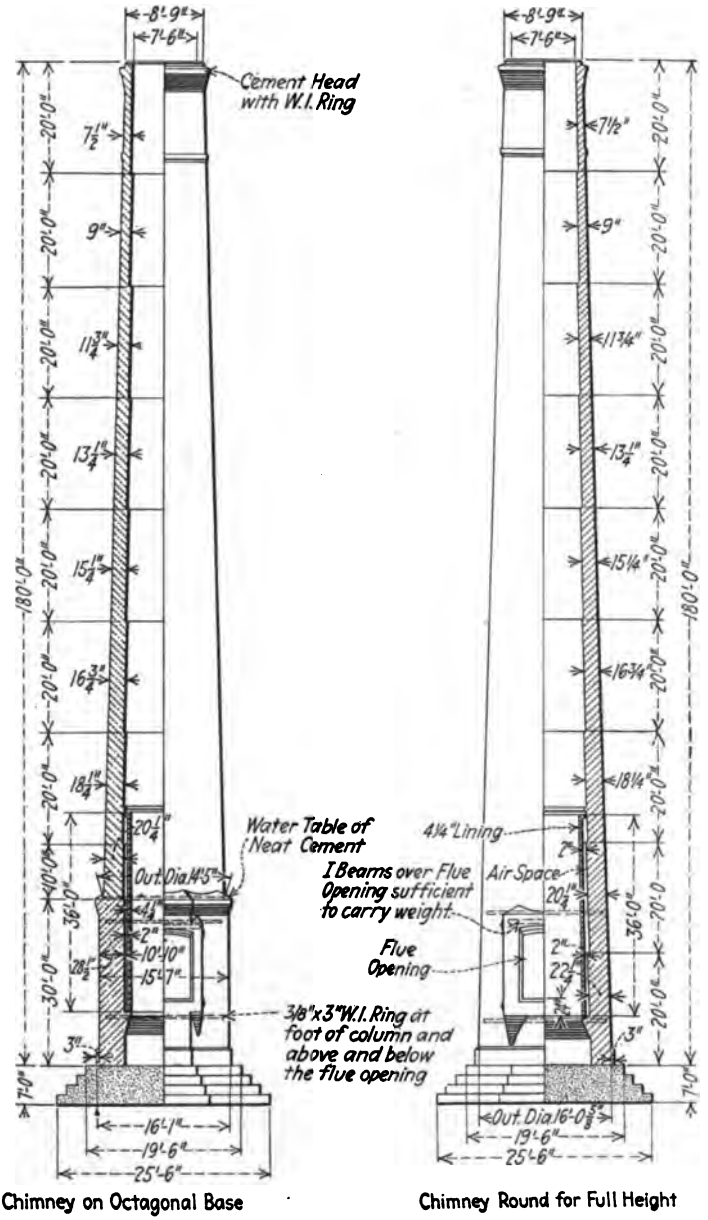

Fig. 105. Example of Kellogg Radial Brick Chimneys.

Burnside Shops of the Illinois Central Railroad, Chicago, Ill.
2590 H. P. of Heine Standard Boilers.

two styles of *Kellogg* radial block chimneys, are shown in Fig. 105. The batter indicated is based upon the figures in Table 15, from which layouts can be made for stacks 3 to 10 ft. diameter and 75 to 225 ft. high. The design should be checked to see that tension does not occur on the windward side, with the maximum wind pressure allowed, as the chimney would then be unsafe.

It is common practice to use regular hard building brick for the base of the chimney, when it is of a square or octagonal form. If the base forms part of the building wall, the two should be bonded by a slip joint, shown in the lower left-hand view of Fig. 106. The radial brick above the breeching

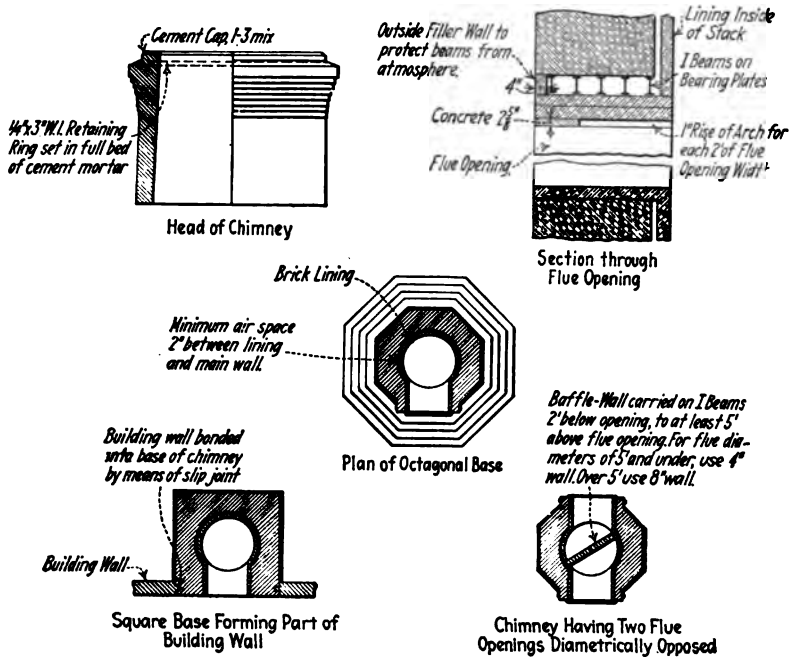

Fig. 106. Typical Details of Radial Brick Chimney Construction.

entrance, shown in the upper right-hand view of Fig. 106, is supported by heavy beams on bearing plates with air spaces at each end to permit expansion. The steel is protected against the effects of the gases of combustion by a flat arch.

To prevent cracking, radial brick chimneys are provided with reinforcing bands that take up the stresses due to expansion. One company conceals three or four 3 by 5/16 in. bar steel bands in the brick work. These rings are placed below and above the flue opening, at or near the top of the lining and in the chimney cap or cornice. Another method is to place these bands at every change in wall thickness, omitting some of them when the bricks have corrugated sides. When gas temperatures are high, additional expansion rings are placed on the outside, spaced about 6 ft. on centers.

A lining inside the chimney is also necessary as a further safeguard against expansion strains. This lining is independent of the stack and is separated from it by an air space of at least 2 in., which prevents the gases from coming in contact with the chimney brickwork. For steam

boiler plants the lining is made 30 to 50 ft. high, or about one-fifth the stack height. For very high gas temperatures the lining should be carried up at least half way, preferably to the full height.

Expansion linings are made of ordinary fire brick or of perforated blocks about 4 in. thick. They are started 2 ft. below the flue opening in the stack. Sometimes the space between the lining and stack is covered at the top. One method is to corbel or rack out the shell of the chimney. This protecting ledge prevents soot or dirt from filling the air space.

Ladders are also a necessary adjunct to chimneys. These are located either inside or outside for the full height of the stack. The rungs should be of ¾ in. round iron, preferably galvanized, of "U" shape, spaced on 15-in. centers and securely anchored to the masonry.

Lightning rods should be provided to protect brick chimneys. A number of pointed rods, above the top of the stack, are connected to one or more conductors extending down to a ground connection beneath the grade line. Points extending 6 to 8 ft. above the top are subject to rapid deterioration owing to the action of the outflowing gases. It is advisable, therefore, to locate a greater number of points around the stack so they will not project more than 6 ft. above the top. Less than two points should not be used on any stack. On large chimneys the lightning rods can be spaced from 6 ft. to 3 ft. on centers, on the outside circumference of the stack.

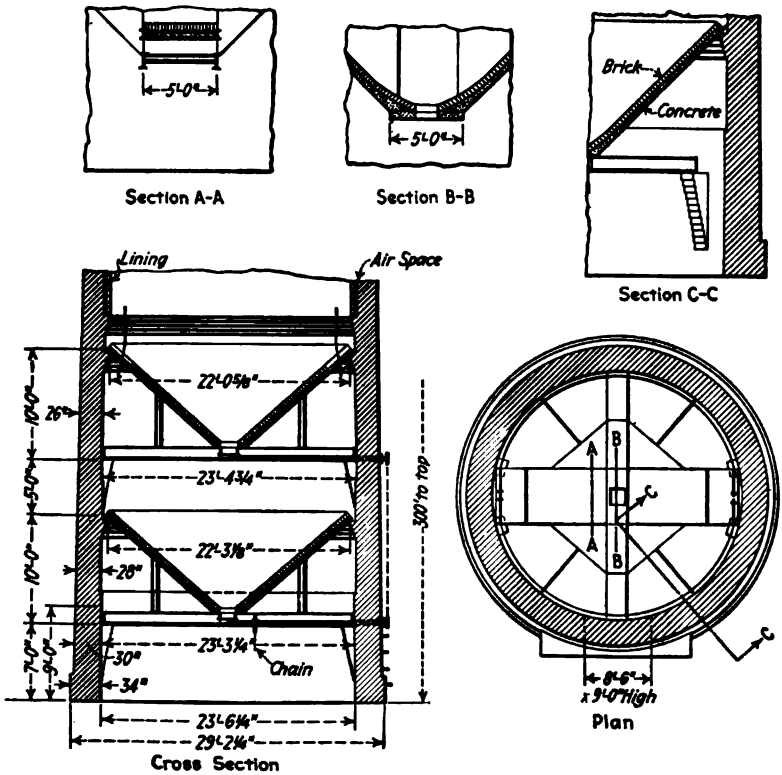

Fig. 107. Soot Collector System in a Large Chimney.

The lightning rods are usually made of ¾-in. copper, tipped with ½-in. platinum thimble points. They are fastened to the masonry and are interconnected by a copper cable placed completely around the top of the stack. To complete the circuit one or two bare copper cables, of ½ or 7/16-in. diameter, are connected to this ring. These conductors extend down the side of the chimney, where they are fastened at intervals, and terminate in a copper ground plate located in permanently moistened earth, in a charcoal bed, or in a pocket filled with crushed coke, and placed away from the chimney foundation. The grounding terminal can be of the coil, plate or cylinder type.

For access to the interior of the stack and to facilitate cleaning, a cleanout door should be located in the base. Standard cast iron cleanouts measure 24 by 36 in. and are fitted with frames, hinges and latches. A tight fit is essential, so the contact surfaces should be planed.

An effective method for the removal of soot and cinders from large chimneys is represented, according to *Thos. S. Clark,* by a collector system installed in a radial brick chimney 300 ft. high, 19 ft. diameter at the top, and about 23½ ft. at the base. Super-imposed hoppers, Fig. 107, are located below the flue opening in the base of the stack. These hoppers are designed to collect the soot and cinders dropped by the gases in passing up the chimney.

The hopper floors are concrete lined with brick. Two are used so that the door in one is closed when the door in the other is open, to prevent the possibility of an open draft up the chimney through both hoppers. Access to each hopper is provided through a manhole, which is reached by a ladder on the outside of the chimney. Each hopper can be cleaned from a gallery built around the rim. In the chimney base are doors large enough to allow a cart to be backed in under the lower hopper to remove the soot and cinders.

Reinforced Concrete Stacks

THE advantages claimed for reinforced concrete chimneys are light weight, minimum space, strength, and rapidity of construction. All joints are eliminated, the stack and foundation being one monolithic structure. Patented steel forms are used rather than wood forms. The structural design is ordinarily based upon a maximum compression in the concrete of 350 lb. per sq. in. and a maximum tension in the steel of 16,000 lb. per sq. in.

The details of a reinforced concrete stack 180 ft. high and 8 ft. in diameter, are shown in Fig. 109. The walls are considerably lighter than brick construction and are concentric with an even taper from top to bottom. The wall thickness is 5 in. at the top and 11 in. at the base. The concrete mixture is 1 part cement, 2 parts sand and 3 parts crushed stone or gravel. This is poured "wet" and then tamped in the steel forms and around the reinforcing bars to secure a thorough bond, as well as smooth inside and outside surfaces.

Vertical reinforcing bars are placed about 3 in. from the outer surface and are distributed proportionately to the load. Around the circumference the stack is reinforced horizontally by heavy wire mesh, woven in triangular form. This is set close to the outside surface of the wall, as indicated in Fig. 108. The flue opening in the stack is also reinforced and the walls there are about 50 per cent thicker.

Figs. 110 and 111 show the process of constructing a concrete stack. One view shows the steel forms and reinforcing rods in place, ready to receive the concrete mixture and the other the completed base section of the stack with the forms removed. The entire chimney is usually finished with a cement wash.

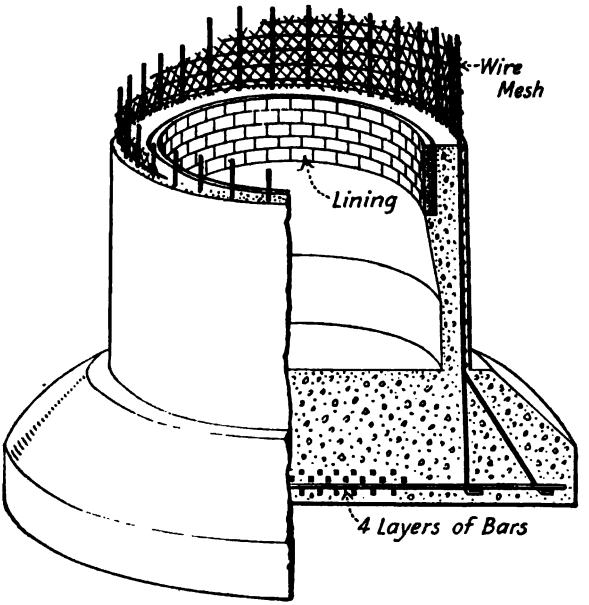

Fig. 108. Base and Foundation of Heine Reinforced Concrete Stack.

To protect the chimney column from the stresses due to expansion an isolated inner core or lining must be installed. This is built of firebrick or perforated blocks in the same manner as described for brick chimneys.

Instead of the ladder steps used in brick construction, concrete stacks are equipped with tackle, consisting of a bronze pulley anchored to the top of the stack, and a 3/16-in. wire cable.

A soot separator is an integral part of the reinforced concrete stack shown in Fig. 112. This stack serves a plant in which patent-leather is manufactured. Soot and cinders issuing from the old chimney lodged upon and damaged the leather, which is dried in the open. The stack has an outside diameter of 8 ft. 8 in. at the top and 23 ft. 8 in. at the base. The unusual taper is due to the soot separator, which is built in at the base as part of the chimney. The soot separator, which consists of two concentric stacks 29 ft. high, is made of radial brick. The separating chamber is in the outside circular passage while the inside section is the chimney proper, the two being connected by three openings in the wall. These openings are of sufficient area to handle the volume of gases through the 8 ft. area, which corresponds to the inside diameter of the chimney at the top.

The flue gas entering the chimney through the 5 by 11 ft. breeching connection has its velocity reduced and owing to the shape of the passage, it flows spirally. This combined action separates the soot and cinders from the gas, which then passes up and out of the chimney free from ash.

The outside wall of the soot separator also serves as the expansion lining for the chimney. The top of the separating chamber is closed with a cast iron cap. In the base of the chimney proper are two cast iron cleanout doors for removal of soot. A 2-in. perforated steam pipe has been provided. Tile drains, as indicated in Fig. 112, have been installed, to keep the chimney free from water.

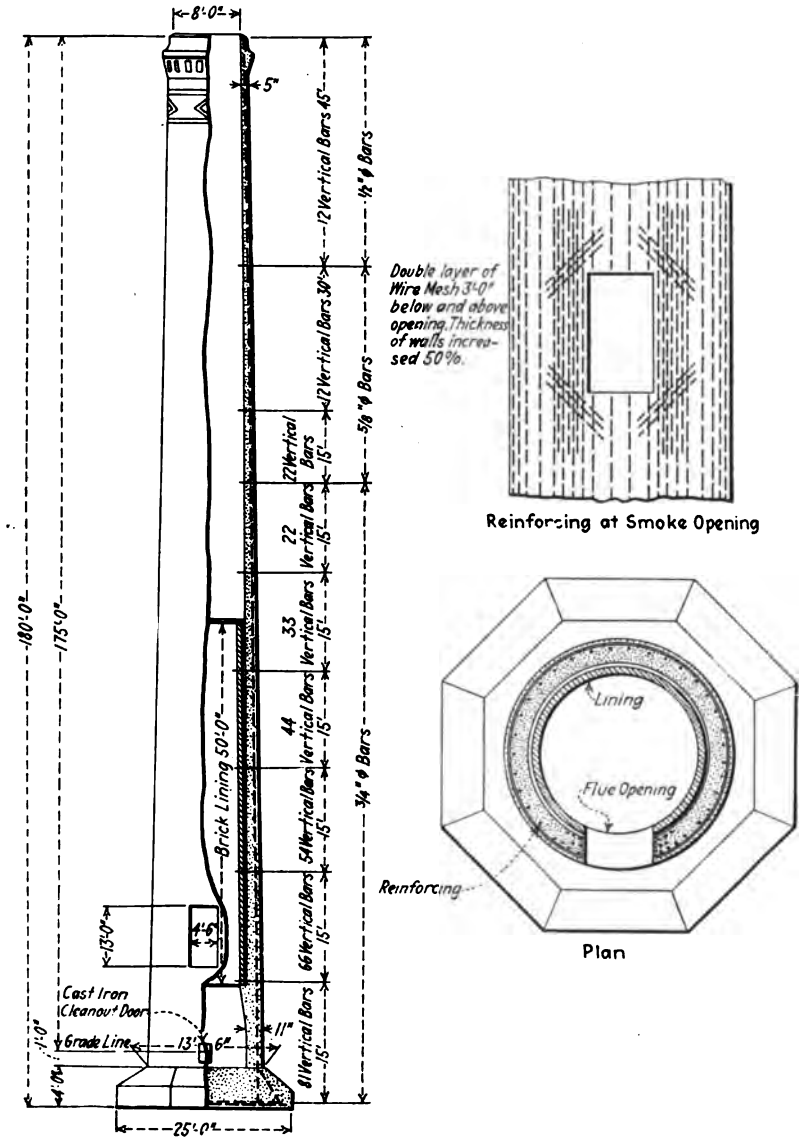

Fig. 109. Heine Reinforced Concrete Chimney.

Fig. 110. Steel Forms and Reinforcing Rods in Place to Receive Concrete.

Fig. 111. Completed Base Section of a Concrete Stack.

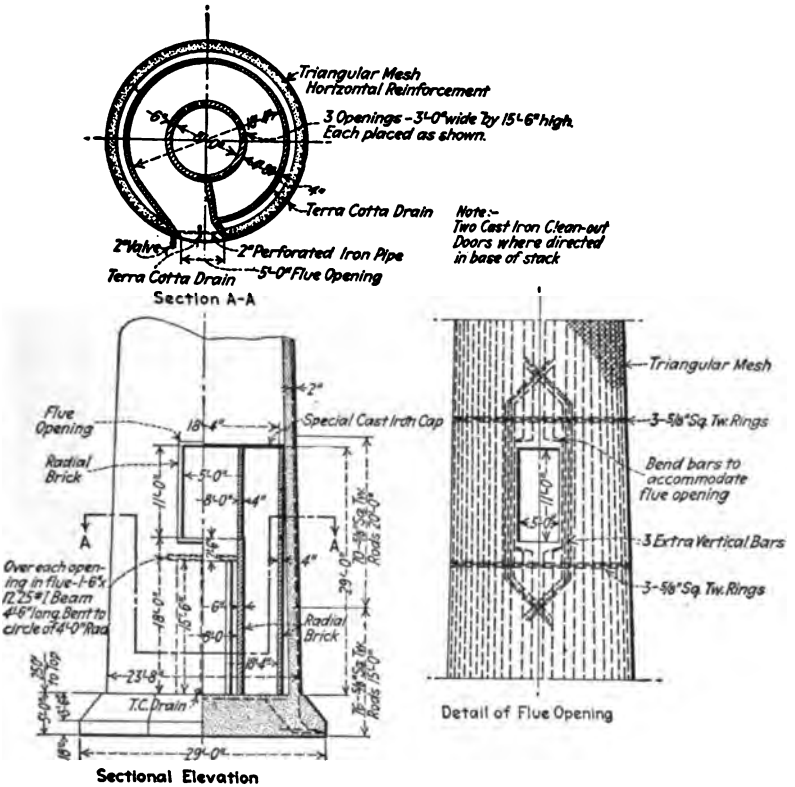

Fig. 112. Soot Separator in a Rust Concrete Chimney.

Reinforced concrete is sometimes considered in the experimental stage, but some concrete stacks have weathered the elements for 15 and 20 years without appreciable deterioration. One of the tallest chimneys is a reinforced concrete stack 550 ft. high with a wall thickness of 7 in. at the top and 29½ in. at the base; the average diameter is 32 feet. This stack is located in an earthquake country, Saganoseki, Japan, at about 450 ft. above sea-level.

The Wiederholt chimney construction is "reinforced tile concrete." Hollow tile blocks made of hard burned clay are used as the forms to receive the concrete during construction. The tile remains permanently as the inner and outer surfaces of the stack, surrounding the concrete at every point.

Foundations for this type of chimney are made of concrete reinforced with horizontal steel bars running in two directions. Vertical bars are embedded to act as anchors for the chimney column. Around these vertical reinforcing bars the tile are set, each course being separately filled with concrete. The horizontal rings are set in the concrete core. It is said that these chimneys are well adapted to chemical plants where acid gases occur and for other special service where gas temperatures are high.

Pillsbury Flour Mills, Minneapolis, Minn., operating 5000 H. P. of Heine Standard Boilers.

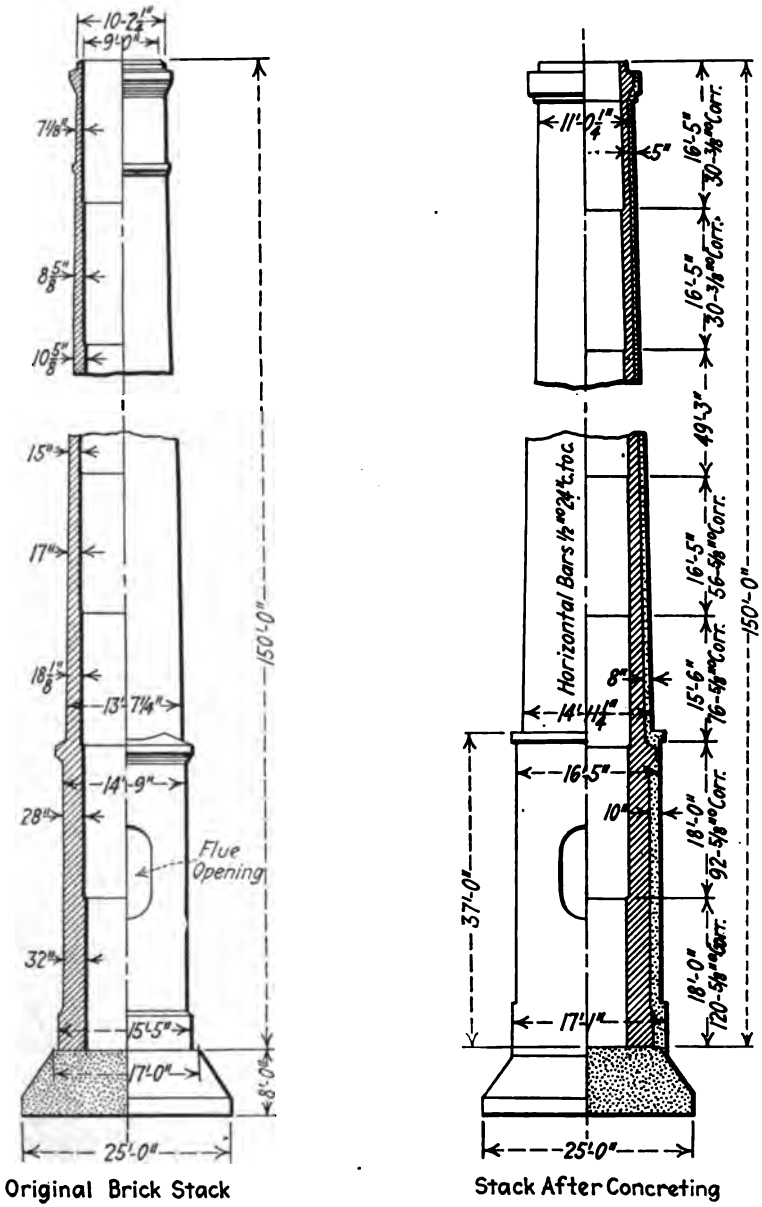

Fig. 113. Reinforcing an Old Brick Stack.

Remodeling of Chimneys

BRICK chimneys are increased in height by adding a guyed length of steel stack. In some instances the added portion is built of radial brick. Where the old part is of square cross section, an octagonal adapting portion is worked in. Sometimes this work is done while the boilers are under fire.

Bent brick chimneys can be straightened by sawing out mortar from the convex side.

Chimneys that are dangerously defective may be made safe by applying a casing of reinforced concrete. Fig. 113 illustrates an example. Steel chimneys that have become badly corroded may be renovated with a concrete casing.

Breechings

THE breechings or flues should be so arranged as to offer a minimum of resistance to the flow of gases. The area should be large enough so that a reasonable accumulation of flue dust will not cause any noticeable choking. The run should be as short and direct as possible. Connecting flues should be so designed that the entering gases tend to flow parallel with the gases already in the main flue. Access doors should be placed conveniently to facilitate cleaning.

Flues are frequently made 15 to 25 per cent larger in area than the stack, depending upon the amount of flue dust expected. Where fine fuel is burned with forced draft, the deposit of flue dust is relatively large and therefore liberal areas should be allowed. Builders of chimneys prefer to limit the area of flue openings to 7 to 10 per cent greater than that of the stack. For structural reasons, the width of opening in the chimney should not be more than one-third the outside diameter of the chimney, the necessary area being obtained by increasing the height of flue opening.

Sometimes the breeching area is proportioned to the total grate area served by allowing 22 per cent of the grate surface as the minimum cross-sectional area of the flue. But this is not good practice, for the size of flue is entirely dependent upon the volume of gases to be dealt with, while the volume of gases due to any given grate surface varies with the intensity of the draft. A breeching suitable for a given grate area under natural draft may be far too small for the same size of grate under forced draft.

The breeching area should be determined by gas velocity. The draft loss depends upon the gas velocity in relation to the length, area and shape of the flue. The velocity may vary from 15 feet per second for long rectangular flues of small area, to 35 or 40 feet per second for large short circular flues. The draft loss may be found by formula (10) on page 183. Whatever velocity is chosen, the resulting area should be increased sufficiently to allow for the deposit of flue dust.

A breeching of circular cross-section causes less draft loss than a rectangular or square section, and the flatter the rectangle, the greater is the draft loss. This is clearly shown by the coefficients of formula (10). Square or rectangular breechings with a semi-circular top are good designs.

In practice, sharp bends and right angle turns are the most common faults found in breechings and smoke connections. While it is not difficult to make or connect long-sweep turns and to install necessary deflectors, these details may be neglected unless the work is carefully supervised. Space conditions often make the installation of some bends necessary. The designer must then use the least number of bends and make them as long and gradual as possible. The bends necessary for a change in direction should have an inside radius at least equal to 1½ times the diameter or width of the breeching.

Fig. 114 will emphasize the bad effect of sharp gas turns. The entering gases tend to strike the opposite wall and leave eddies as at A, A, which are the equivalents of reduction in flue area. Rounded corners at X and near A would reduce the draft loss, but the gases from Boiler No. 1 would still interfere with the flow from Boiler No. 2. This figure also shows poor design in making the breeching parallel. The gases from Boiler No. 2 lose velocity in filling the larger area of the main flue, and as this velocity has been given to the gases by the effect of the chimney, velocity so lost is wasted chimney effort. As the gases from Boiler No. 1 crowd into the main flue, the gases from Boiler No. 2 have less space and their velocity is again increased, putting more work on the chimney.

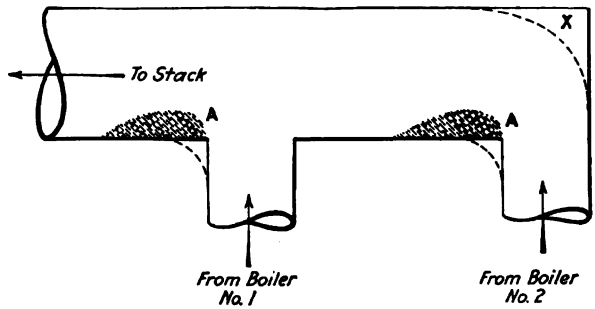

Fig. 114. Effects of Right-angle Turns in a Smoke Flue.

Fig. 115 illustrates excellent practice in designing a breeching to serve several boilers. The bottom of the sides is made horizontal to agree with the boiler settings, and the increase in area as each boiler is connected is taken care of by the sloping top. The deflection plates forming the bottom are made parallel with the top, keeping the gas velocity uniform, and the steps between them provide ideal locations for the dampers.

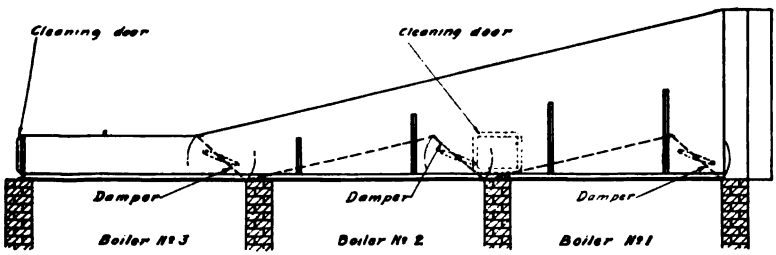

Fig. 115. Breeching and Damper Arrangement for a Battery of Boilers.

A good example of breeching design for several boilers is shown on page 218.

The connection to the stack should be through an easy upward bend, so as to enter the chimney at about 45 degrees.

Where breechings from boilers on both sides of a chimney meet before entering it, care should be taken to guide the two currents into fairly parallel streams before they meet. Fig. 116 is given to emphasize the bad effect of two opposing gas currents in a bull-headed or T-connection. Together with the area-reducing eddies at A, A, as in Fig. 116, this head-on collision of the two streams may cause sufficient draft loss to reduce the boiler capacity seriously.

Equitable Building, New York City.
3500 H. P. of Heine Standard Boilers.
Tallest Chimney in the World.

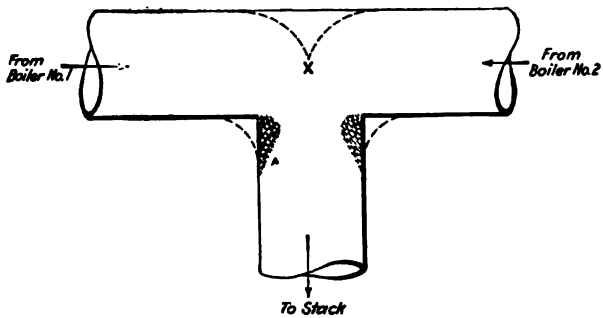

Fig. 116. Effects of Bull-headed Connection on Gas Flow in Breeching.

In such instances curved deflecting plates as at X, particularly when a dividing plate is carried from X to the entrance of the flue leading to the stack, have made a notable improvement. Rounding the corners as at A, A, is a still further advantage.

Fig. 117 shows two flues connected to a central stack. To reduce the draft loss from the head-on collision of the gases, a baffle is placed in the base of the chimney, so that the gases are deflected into parallel directions.

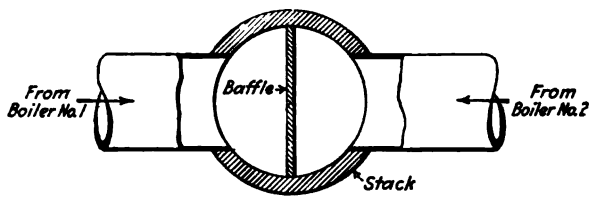

Fig. 117. Baffle Wall in Chimney to Prevent Collision of Gases.

Examples of good practice in breeching design where the chimney is carried by a symmetrical hood are illustrated by Figs. 118 and 119, which show breeching hoods for one and two boilers respectively.

As most engineering problems are solved by compromise, so the power plant designer must frequently compromise between ideal flue design and increased height of stack. Flat rectangular breechings and sharp curves may become necessary to meet space restrictions, and the increased chimney height resulting therefrom must be accepted as unavoidable.

Steel or iron plate is used in constructing breechings and smoke connections. For main breechings of square section, metal 3/16 in. thick is required. The sides, bottom and top are braced or reinforced on the outside with 2½-in. angle iron. Individual smoke connections between boilers and breeching are usually made of No. 10 gage metal, although for longer runs and large size boilers No. 8 gage plate is sometimes used. When of square section, these are held at the corners by 1¾-in. angle iron, and are also reinforced or further stiffened with angle iron on the outside.

For the removal of soot accumulation and for access to the breeching, cleanout doors should be provided at convenient points. It is good practice to install one cleanout at the far end of the breeching and at least one other cleanout along the run of flue, either in one side or at the bottom. Cleanout doors are made of heavy cast iron or steel plate, fitted with massive

Breeching built for the Norfolk Navy Yard, Norfolk, Va., in which are installed 1600 H. P. of Heine Standard Boilers.

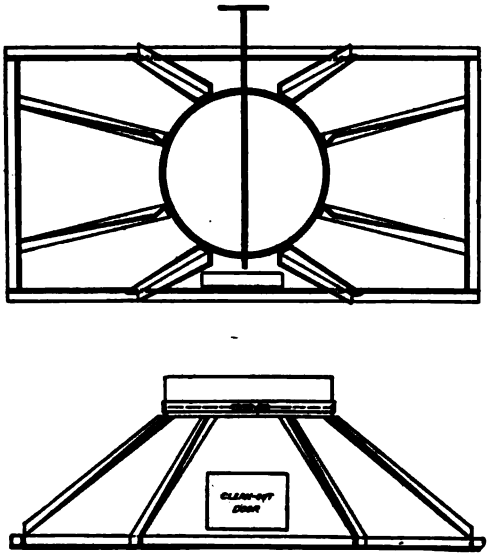

Fig. 118. Ideal Breeching Arrangement for Single Boiler.

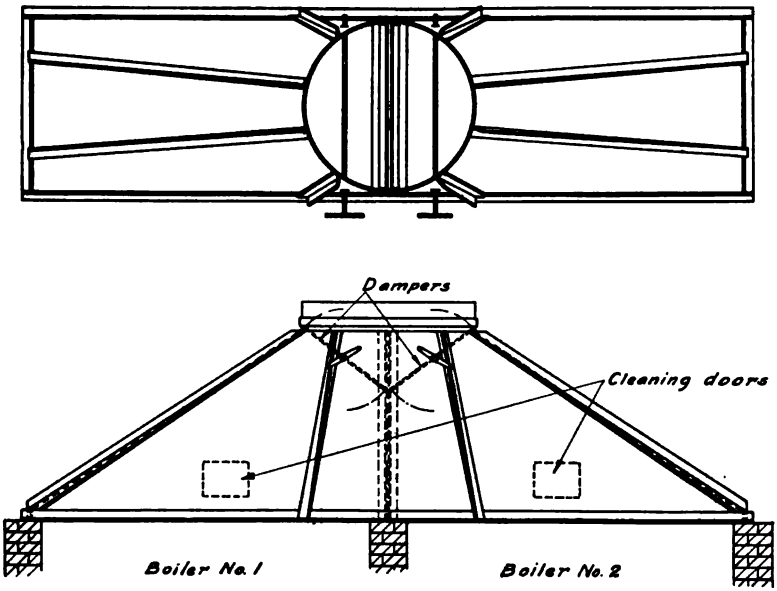

Fig. 119. Ideal Breeching Arrangement for Two Boilers.

hinges and one or two clamps to facilitate opening and closing of the door. Door frames are riveted to the breeching; both the frames and doors should be planed so as to be air-tight. Sliding doors are sometimes used for cleanouts.

Breechings and smoke flues should be covered with non-conducting material, such as asbestos or magnesia heat insulation, or else be protected with refractory brick or other vitrified material. The coverings or linings are frequently placed inside the breeching to protect the metal against the possible corrosive action of the gases, although it is advisable to have the insulation or lining on the outside. The breeching, smooth on the inside, will then permit a straight uninterrupted flow of the gases into the smoke stack; there will be no loose pieces to fall into the breeching and obstruct the gas passage, and repairs can be made without interfering with plant operation. The insulation on smoke flues is important because it prevents lowering the gas temperature, by reducing heat losses. If this temperature is lowered while the gases are passing through the flue, the effective draft will be reduced.

Overhead steel breechings are usually hung from the building construction, although special supports are frequently required.

Underground flues involve a high friction loss because of the large number of turns in the gas path from the boilers to the stack. The brick or concrete used for these flues is porous, so that the flue is subject to leakage. Being located below the boiler room floor the flues are difficult to keep clean and the soot gradually accumulates and obstructs the gas passage.

Dampers

DAMPERS are used both to vary the gas flow in controlling the rate of combustion, and to close the flue entirely in isolating idle boilers. Dampers should move easily and when wide open offer the least possible resistance to gas flow.

Dampers used for isolating idle boilers or flues should be reasonably gas-tight. Levers or handles to operate dampers should be located in particularly convenient and easily accessible positions, and be so arranged that they definitely indicate how wide the dampers are open.

Dampers should be made the full area of the breeching or uptake. If a rectangular damper is used, it will cause the least disturbance to orderly gas flow if swung about its longer axis. Fig. 120, for a rectangular damper turning about its shorter axis, illustrates faulty design by showing the area wasted in the formation of eddies. Fig. 121 illustrates good practice in damper arrangement. The dampers swing in unison about their longer axes; and when wide open, the gas flow is virtually undisturbed.

Each boiler must be provided with an independent damper. It should fit well, so that when the boiler is idle there will be very little leakage. Inleakage of cold air into the main flue through defective dampers of idle boilers reduces the draft very seriously.

Individual boiler dampers are set by hand so as to divide the load equally between the boilers by correcting the unavoidable differences between the drafts at boilers near the stack and those at boilers more remote. Variations in the general or total load are cared for by a main damper near the chimney, controlled either by hand or by an automatic regulator. Damper regulators are discussed in Chapter 16 on OPERATION. The main damper need not be tight unless there are more than one, such as when two or more flues enter the same chimney. Sometimes the main damper is prevented from forming a tight closure, either by providing a hole in it, by stops to limit its travel, or by adjustment of the operating mechanism.

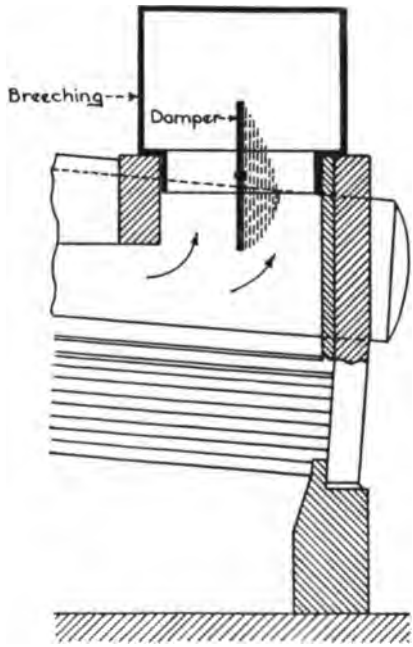

Fig. 120. Faulty Damper Installation.

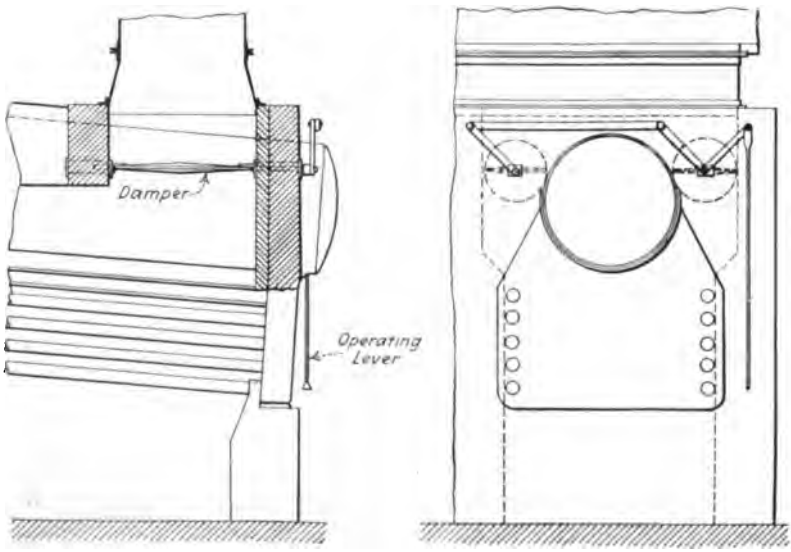

Fig. 121. Proper Location of Dampers.

Dampers should be balanced and should move easily. Swivel or "butterfly" dampers are generally used, since they swing freely and are not apt to get out of order. Sluice or slide dampers are sometimes necessary to meet space requirements, but are avoided wherever possible, as they are difficult to move, especially when there is dust in the slides or the dampers are slightly warped.

Dampers are operated by chain, wire rope or rods. Rods are preferable, because they give positive action, whereas if chain or rope is used, reliance must be placed on the overbalance for movement in one direction. If any of the bearings stick, the damper may remain in one position without the defect becoming immediately known; whereas rods show such a trouble at once. For this reason, where rope or chain is used, the overbalance is made much heavier than is generally necessary, thus making movement more difficult.

Unless the handles for operating the dampers are brought to a convenient position, so that the attendant can work them easily, they will not be adjusted as frequently as they should be, and waste of fuel will result from failure to relate the draft to the load and the fuel. The bad effects of controlling the draft by means of the ashdoors and firedoors are fairly well known, but blame for this condition should usually be placed on those responsible for making damper operation difficult and awkward.

The handles should be arranged so as to definitely indicate how much the damper is open. This indication is sufficiently important to warrant checking from time to time. Lost motion prevents correct indication and should be eliminated, either by overbalance or refitting. The damper shaft should be squared where the operating lever is attached to prevent any possibility of slipping. The same requirement applies also to any other shaft and lever of the operating mechanism.

Fig. 122 shows the construction details and general proportions of a good damper design.

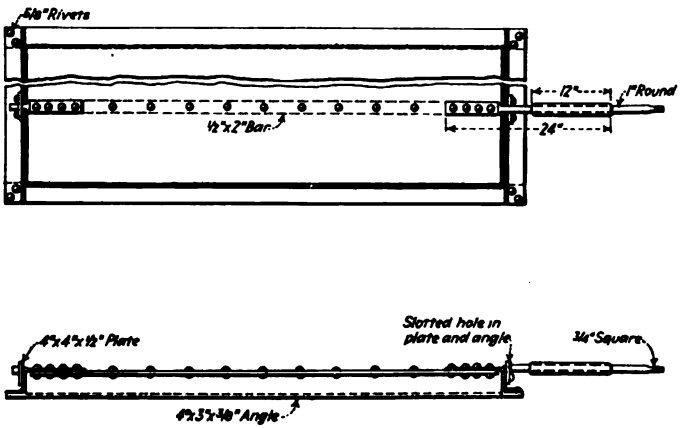

Fig. 122. Construction Details of a Damper.

Steel plate ¼-in. thick down to No. 8 gauge is used for dampers. Angle iron shapes are employed as ribs for large surfaces, set about 2 ft. apart. Bar iron or extra heavy pipe is used for the spindle which is supported on rollers or even ball bearings on the outside of the steel flue.

CHAPTER 7

MECHANICAL DRAFT

MECHANICAL draft is adopted for obtaining economy of operation, increased capacity, or both. It is called either forced or induced draft, according to whether the draft is intensified by increasing the pressure at the inlet or decreasing the pressure at the outlet of the boiler. Both methods, and the combination of the two, are in general use.

Forced draft may be of the closed ashpit or closed stokehold system; but as the latter is confined to marine practice, it will not be discussed here.

The economic advantages resulting from the use of mechanical draft are best explained by diagrams. In the following diagrams the pressures and vacua are not drawn to scale, but they clearly indicate the effect of the different ways of applying mechanical draft.

Fig. 123 represents graphically the circumstances present in natural draft plants.

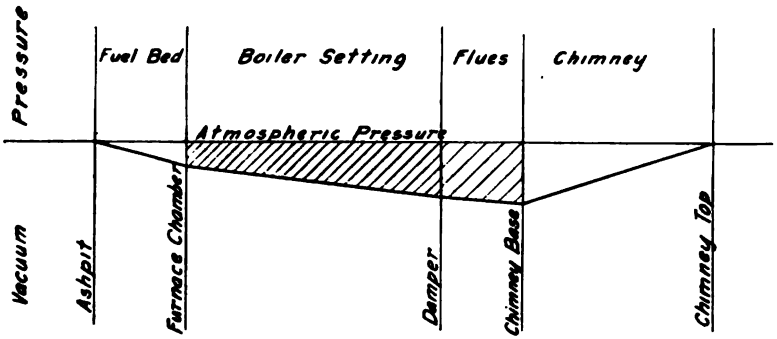

Fig. 123. Diagram of Natural Draft Plant.

The vacuum in the boiler setting and flues draws in cold air through the porous brickwork, cracks, leaky cleaning and dusting doors, and through firedoors opened for hand firing. The heavily shaded area indicates where the greatest heat loss occurs, due to the large quantity of cold air reducing the temperature of the gases and rate of heat transfer to the water in the boiler. The lighter shaded area shows the draft loss through leaky flues, which reduces the static chimney draft by lowering the gas temperature, and reduces the available draft by increasing the volume of gas to be handled by the chimney.

Fig. 124 shows the conditions when forced draft is applied to take care of the draft resistance of the fuel bed.

The vacuum in the boiler setting and flues is much less, so that the inleakage of cold air and consequent waste of fuel is greatly reduced. Very little cold air is drawn in through open firedoors, as the vacuum above the fire is extremely small.

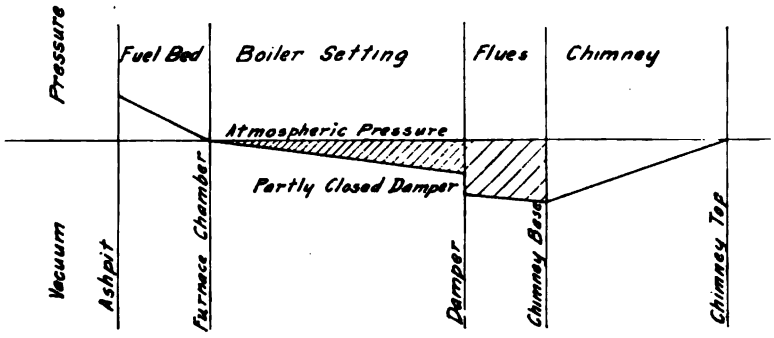

Fig. 124. Diagram of Forced Draft Plant.

A further economy may be gained by the use of cheaper fuels which generally offer much greater draft resistance, since there is no reasonable limit to the air pressure which may be maintained in the closed ashpit.

When forced draft is used for increasing boiler capacity, an operating limit is set by the capacity of the chimney, and to pass this limit, induced draft must be used as well. Fig. 125 shows how the condition illustrated by Fig. 124 is modified by the addition of the induced draft fan.

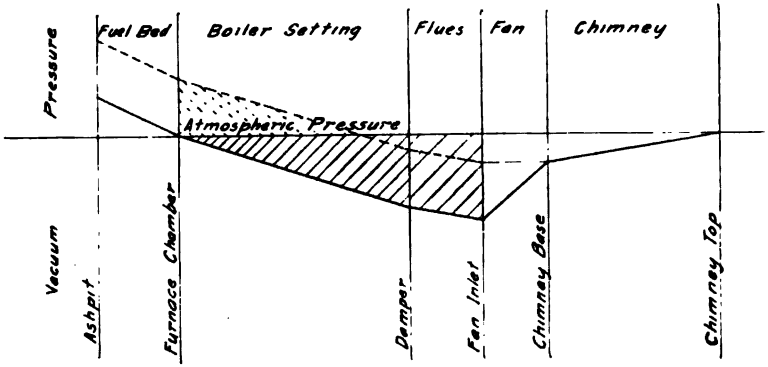

Fig. 125. Diagram of Combined Forced and Induced Draft Plant.

Even under these intensified conditions, the loss as shown by the heavily shaded area is less than under those for the natural draft of Fig. 123, because the vacuum over the fire is so small.

The dotted lines in Fig. 125 show what happens when the operating limit of forced draft alone is passed. As the chimney is overloaded, it cannot cause sufficient draft to overcome the resistance of the setting and flues at this higher capacity, and the forced draft builds up pressure above the fire. This pressure continues through a part of the boiler setting as shown by the dot-shaded area. Where this pressure occurs, the gases escape through leaks into the boiler room, causing great discomfort; brickwork, furnace fronts, firedoors, and so forth, deteriorate rapidly. While the draft resistance of the fuel bed is unchanged, the ashpit pressure, which is measured above

atmospheric pressure, is higher than when the induced draft is added. Therefore, the cost of operating the induced draft is somewhat offset by the reduction in cost of operation of the forced draft, due to the lowered ashpit pressure.

Induced draft alone is not generally applicable for increasing boiler capacity. Fig. 126 illustrates how it increases the leakage loss in comparison with Fig. 123, which is represented by the dotted curve.

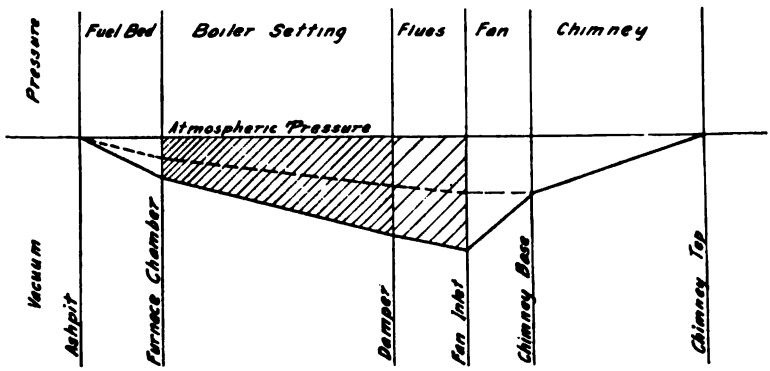

Fig. 126. Diagram of Induced Draft Plant.

When economizers are installed, the temperature of the chimney gases is reduced, and the resistance of the economizer is added to those of the fuel bed, boiler setting, and so forth, and the natural draft of the chimney is often rendered insufficient to carry the desired load. This defect of draft may be made up by induced draft fans. Fig. 127 is a diagram illustrating the addition of an economizer and induced draft fan to the plant as shown in Fig. 123.

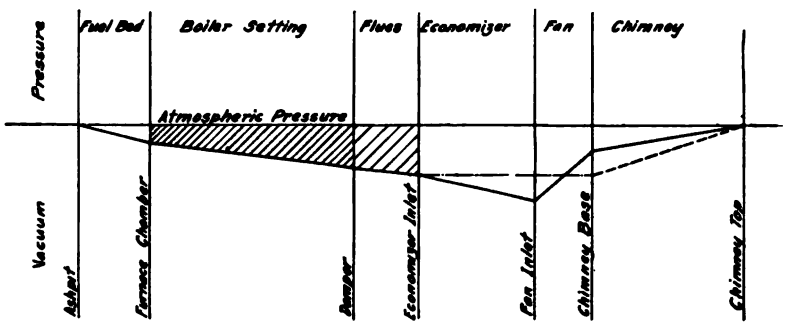

Fig. 127. Diagram of Economizer and Induced Draft Plant.

As shown by the dotted line from Fig. 123, the induced draft fan just makes up the draft losses due to the resistance of the economizer and the reduced static chimney draft occasioned by the lowered gas temperature.

City Water Works of Erie, Pa. 1225 H. P. of Heine Standard Boilers and Heine Superheaters.

There are two ways of producing mechanical draft in common practice,—by fans and by jets. Each method has its advantages and is better suited to some conditions than the other is. Fans usually take much less power to operate than jet-blowers, because the simplicity of jet-blowers has resulted in their haphazard manufacture. However, *A. Cotton* states that steam jet-blowers whose power consumption compares favorably with that of fans are made; although ill-proportioned and wasteful blowers are widely offered. Jet-blowers have nothing which can break down or wear out, so that in reliability they are not approached by fans. Furthermore, they cost less and need no foundations. On the other hand, the steam used by jet-blowers is lost, while that used by fan engines or turbines may be recovered in feed-water heaters or condensers. The steam of jet-blowers, by raising the position of highest temperature, keeps the grate bars cooler than usual and tends to reduce the formation of clinker.

Disk fans mounted on the same shaft with steam turbines are used for low pressure forced draft work, generally a separate fan to each boiler. Owing to their extremely high speed, sufficient pressure is generated to give fairly high combustion rates. In some types, the turbine exhaust is discharged into the ashpit; in others the turbine is fully enclosed, and the exhaust may be recovered by condensation.

The best examples of jet-exhausters for induced draft are offered by locomotives and by the evasé chimneys mentioned in Chapter 6.

Forced Draft

THE first considerations in designing a forced draft installation are the quantity of air required and the pressure. It is common to allow either 12 cubic feet per minute per B.H.P., or 18 lbs. of air per pound of coal. These figures should not be used indiscriminately, as the air required will depend upon the kind of coal and the method of burning it. For stoker work, fans should be capable of furnishing 50 per cent excess air above the theoretical amount. The pressure required will depend upon the kind of coal to be burned and upon the rate of combustion. Reference should be made to Fig. 97. In stoker firing, the stoker manufacturer should be consulted, since the pressure necessary to generate a given boiler capacity differs greatly with different types of stokers. With fans, great care should be taken to get these quantities as accurate as possible, for if the fan proves to be improperly proportioned for its work, it cannot be changed without considerable expense. With jet-blowers, more latitude is offered, since changes in the size of nozzles are readily made. But the characteristics of any jet-blower under advisement should be carefully considered, as it is the lack of such consideration that is responsible for frequent waste of power.

Forced draft pressures have increased rapidly in recent years. A few years ago, pressures above 2 in. of water were not called for. Such pressures as were used were met by fans driven at slow speed by engines. At present, underfeed stokers developing high boiler ratings need pressures up to 8 in. of water, and the higher fan speeds necessary have caused the engine to give way to the more dependable steam turbine or electric motor.

The principal resistance against which the forced draft fan must operate is offered by the fuel bed. This is changing constantly, varying the pressure and the volume of the air delivered by the fan. The fan speeds are usually controlled by an automatic device and are continually changing. The pressures required from the fan vary with the boiler load, from 1 to 8 in. of water. The speeds of the fans are high and they require considerable strength. Because of the changing speed, the fan impeller must be strong enough to resist not only centrifugal forces, but also stresses caused by the changes in torque.

Forced draft fans built by different manufacturers differ considerably in size. The dimensions in Table 16 are given as an example.

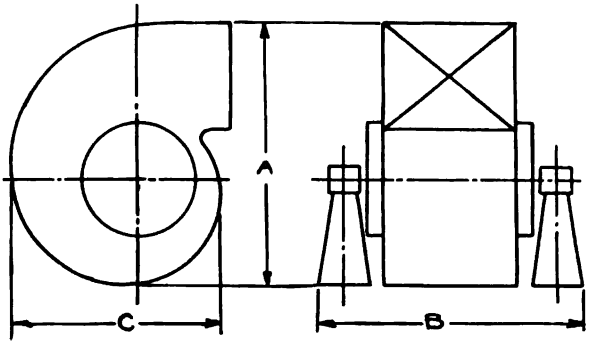

Table 16. Sizes and Weight of Forced Draft Fans

Boiler Output, H. P.	Fan Outlet Area, Sq. Ft.	INCHES			Weight Complete, Lb.
		A	B	C	
500	4.3	55	50	43	1,700
1,000	8.6	77	68	61	3,300
1,500	13	95	80	74	4,800
2,000	17	110	94	86	6,500
3,000	20	135	115	105	9,000
4,000	24	155	129	122	12,000
5,000	43	174	145	136	15,000
10,000	86	246	195	192	20,000
15,000	130	300	233	236	45,000

Fan Drives. Forced draft fans, whether automatic regulator is used or not, should be driven at variable speed. The most satisfactory method is by steam turbine. For the smaller fans (capacity about 25,000 cu. ft. per min.) good steam economies can be secured with a direct connected turbine. For volumes in excess of this helical gears should be installed between turbine and fan.

The direct-current motor with a speed reduction of 50 per cent, is well adapted to driving fans. The reduction should be first accomplished by field control, then at the lower speeds by armature control. The speed control is important as the horsepower of a fan operating against a given resistance changes as the cube of the speed.

In large power plants power for auxiliaries is often furnished by a turbine-driven alternator; this is not an advantage, as far as the fans are concerned, because alternating current motors are not efficient at reduced speeds. This motor is preferable, however, when the fans are to be placed in a boiler house or other part of the plant where the commutator of the direct current motor would be exposed to dust and dirt.

Operating Difficulties. A properly designed forced draft fan should be, and usually is, one of the most reliable pieces of apparatus in the power plant. However, certain troubles and difficulties are encountered more frequently than necessary. Oil escapes from the fan bearings, being picked up by the entering air and carried into the fan impeller. As fan bearings are ring oiling the oil reservoir may become empty and cause the loss of a bearing lining or shaft.

The fans may fail to deliver the required volume at the necessary pressure. This reduction in pressure may easily occur even with fans that will meet their guarantees when tested on the manufacturer's test plate. This discrepancy is due to the difference between the test and installation conditions. On the test plate the fan is connected to a long straight duct. Very seldom is any such arrangement found in an actual plant. Whenever possible a layout of the duct work leading to the fan should be given the fan manufacturer, and he should be asked for approval and recommendations.

The lack of proper balance is the most serious difficulty encountered in fans. If this is allowed to continue, the metal in some part of the fan impeller will be fatigued to the point of rupture. Out-of-balance is largely in the control of the manufacturer, but is occasionally caused by negligence on the part of the operating force. All fan wheels will accumulate dust and should be cleaned regularly. Ordinarily a forced draft fan that is cleaned every two months will not accumulate sufficient dirt to impair its running balance.

Types of Fans. Fans may be classified according to the style of blading, whether backwardly curved, radial, or forwardly curved. Characteristics of each type are given in Figs. 128, 129 and 130. The behavior of these different

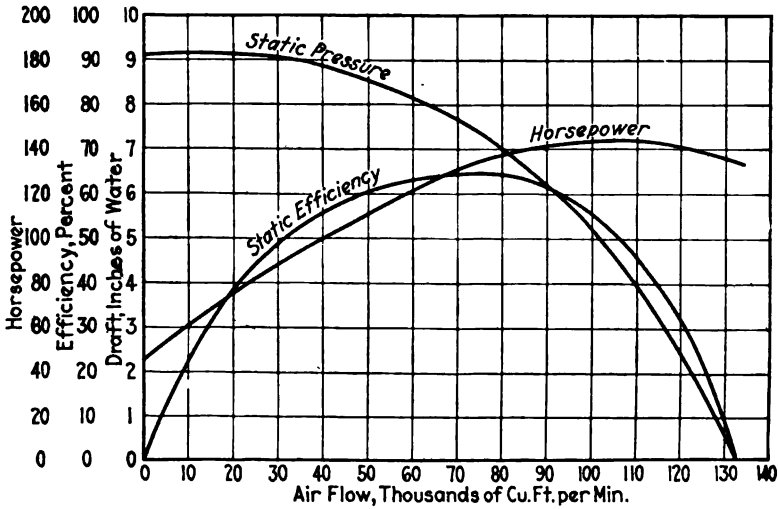

Fig. 128. Pressure Characteristics of Backwardly Curved Blade Fans.

types determines their applicability to meet the particular problem under consideration. The conditions imposed by hand firing and by each of the various types of stokers are different, and the demands of each at different

McCormick Building, Chicago, Ill., equipped with Heine Standard Boilers.

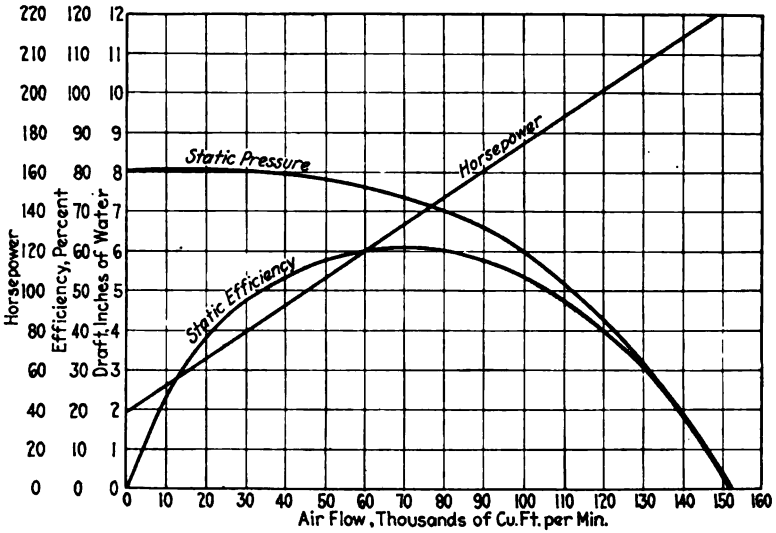

Fig. 129. Pressure Characteristics of Radial Type of Fans.

loads are different. The pressures required at different loads must therefore be compared with the fan characteristics to determine which type of fan will be appropriate.

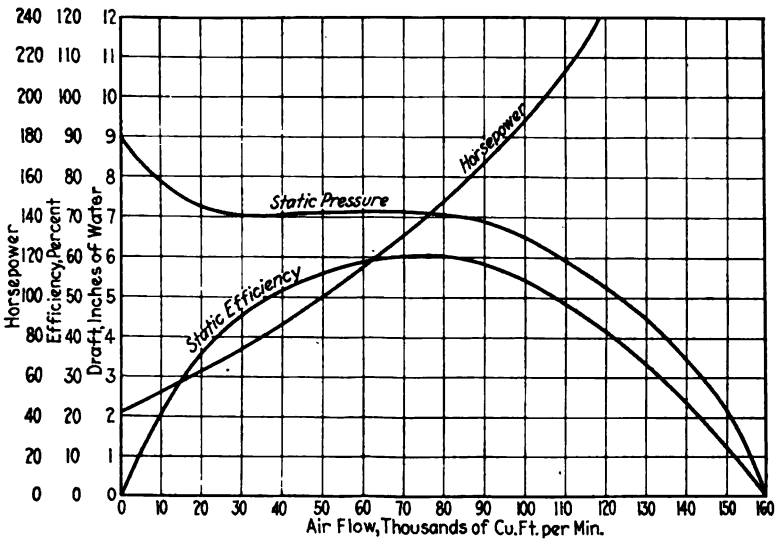

Fig. 130. Pressure Characteristics of Forwardly Curved Blade Fans.

For use with stokers, there is a temptation to pick a small fan and accept a poorer efficiency for the peak loads, especially when they occur for only a short time each day. Whether this is good economics will depend upon the frequency and duration of the peak loads. There is always danger that the tip speed of the fan so selected will be too high at the peak load. Fans are designed for a safe tip speed of 16,000 to 18,000 ft. per min. An excellent specification requirement is that the fans shall be run without showing any signs of permanent distortion for two hours at a speed 25 per cent above the highest operating speed. As stresses due to centrifugal force increase as the square of the speed, the stress during the two-hour run will be about 50 per cent greater than under the most severe specified condition. This test can be met by any properly designed fan without causing harm to show up then or later. Tests at higher than 25 per cent overspeed should not be called for, as the stresses put upon the fan might be great enough to start ruptures, which might escape inspection after the test run.

Performance of Fan. A test on a manufacturer's test plate with the fan blowing into a long straight duct is simple enough, although it requires extreme care, but to test a fan after installation is extremely difficult. The only readily available instrument for measuring the volume of air in a duct is the double pitot tube. Fig. 131 shows this tube and its connections to the indicating gages. When the pitot tube is carefully used, volumes can be determined within 2 per cent accuracy. To secure this accuracy, measurements must be made in a straight run of pipe far enough away from the fan so that the turbulence it sets up in the air is dissipated, and a smooth steady parallel flow is insured. Usually the distance from the fan outlet to the pitot tube should equal 10 or 15 pipe diameters. In most forced draft installations there is no straight pipe of this length, so that the results must be regarded as indeterminate. The readings with a pitot tube are sometimes surprisingly accurate, even when it is placed close to the fan outlet, but nevertheless one should always select as a place of measurement the longest run of straight pipe available.

The volume delivered by the fan can be determined from the manufacturer's pressure, volume and horsepower-volume curves, drawn for the speed at which the fan is tested. The pressure can be determined by taking five or six readings at different places in the main duct, allowing about $^1/_{16}$ in. for the loss from the fan outlet to the main duct. The volume corresponding to this pressure can be determined from the pressure-volume curve. If the fan is driven by a motor so that the horsepower can be determined for the same conditions an additional check can be secured from the horsepower-volume curve. The volumes determined by pressure and by horsepower should check within 5 per cent.

When the air velocities are measured by a pitot tube, the duct must be divided into at least 16 equal areas and a reading taken at the center of each. In obtaining the average of the 16 readings of velocity pressure, the velocities can be calculated for each reading and the average then determined; or the average velocity pressure can be calculated by squaring the mean of the square roots of the 16 readings.

The pitot tube shown in Fig. 131 is double. The small inside tube is open only at the end, which must point directly and truly into the air stream. The pressure indicated on a U tube with one leg connected to this inner tube and the other leg open to the atmosphere, is the static pressure in the pipe plus the velocity pressure. The larger outside tube is plugged at the end and has four 0.02 in. holes drilled perpendicularly through the sides. The pressure indicated on a U tube with one leg connected to this outer tube and the other leg open to the atmosphere is the static pressure in the pipe only, since because of the small perpendicular holes, the pressure is entirely independent of the air velocity. The difference between these readings is the velocity pressure. If, instead of connecting U gages as just described, the

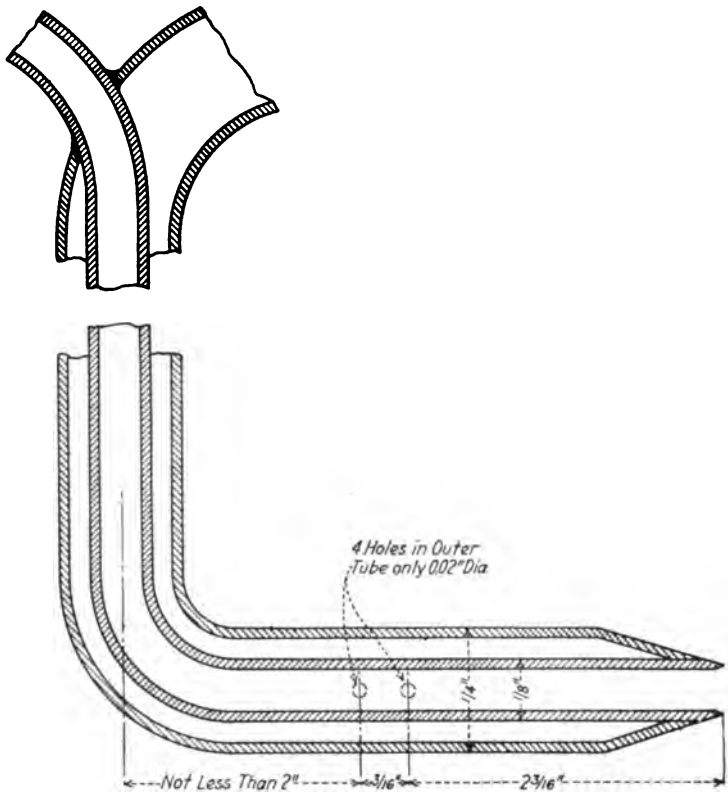

Fig. 131. A Double Pitot Tube for Measuring the Volume of Air in a Duct.

inner tube of the double pitot tube is connected to one leg of the U gage, and the outer tube to the other leg, the reading of the U gage will now be the velocity pressure, since the static pressure is applied to both legs of the U gage and is thus canceled.

The velocity can be calculated from the velocity pressure by the following formula:

$$V = 1096\sqrt{\frac{p}{w}} \qquad (13)$$

V = velocity, feet per minute.
p = velocity pressure, inches of water.
w = density of air in pipe, pounds per cubic foot.

At 65 deg. and standard barometric conditions, the density of air is 0.075 lb. per cubic foot. The above formula is readily derived from

$$V_1^2 = 2gh \qquad (14)$$

V_1 = velocity, feet per second.
g = 32.2 = acceleration due to gravity.
h = head, feet of air (equivalent to p in inches of water).

A part of Boiler Room No. 1 of the Federal Sugar Refining Co., Yonkers, N. Y.
7606 H. P. of Heine Standard Boilers, with Murphy Stokers.

The horsepower represented by the air leaving the fan, usually called air horsepower, is the fan output and can be calculated from

$$H.P. = 0.000,158\ Qp \qquad (15)$$

Q = volume, cubic feet per minute.
p = pressure, inches of water.

If this fan output is used to determine the mechanical efficiency of the fan, p should be the total or impact pressure; that is, the sum of the static and velocity pressures, which sum is given by the reading at the small open end tube. If the static efficiency is to be found, the fan is not credited with the energy due to the velocity of discharge, and p should be the static pressure, or the reading given by the large outside tube. The quantity of air handled per minute by forced draft fans is frequently a large percentage of the cubical contents of the room in which the fans are placed, so that not infrequently the static pressure in the room is 0.2 in. below atmosphere. This condition will automatically be taken care of by the readings of the U tubes themselves, provided they are always placed in the same room from which the fans are exhausting their air.

Ducts and Dampers. The shape and arrangement of ducts and the placing of dampers has an important effect upon the pressure of the fan as carried through to the stoker windbox. Bends should have an inner radius of from 1½ to 3 diameters. Y's should be used in preference to T's, and if T's are necessary the "Poor Type" of Fig. 132 should be avoided, if possible, or the sharp corners changed to be like the dotted lines. The one marked "Good Type" with rounded corners and deflecting plates is preferred; and if the ducts are of rectangular cross-section, the deflecting plates are easily applied.

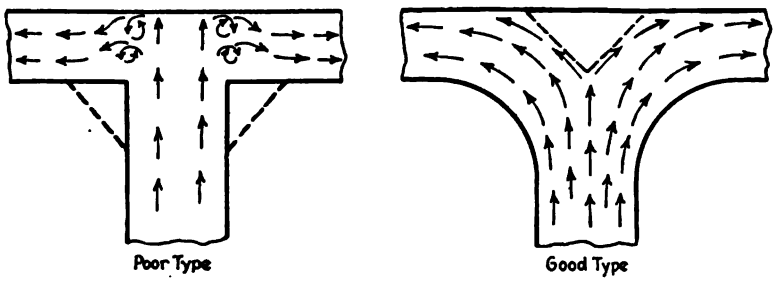

Fig. 132. Good and Poor Forms of Tees.

Dampers. When two or more fans blow into a common duct, outlet dampers for each fan must be provided; these can be closed when any fan is not in operation. These dampers frequently cause large reductions in fan pressure. An ordinary butterfly damper should have a small indicator placed parallel to the damper and fastened to the damper shaft outside the duct, whenever the damper handle itself will not serve as an indicator. When the handle can be placed in a position other than parallel to the damper itself no one can be sure when the damper is open. The butterfly damper should be placed as far from the fan as is convenient. Its shaft should lie in a plane perpendicular to the fan shaft; that is, the damper shaft should always be vertical rather than horizontal.

Louver dampers are frequently placed in or close to the fan outlet. The shafts of these should also be provided with an indicating mechanism. They should be vertical, particularly with the small housing types of fans. The air in the fan outlet is in a highly turbulent condition due to the

action of the wheel and does not come from the outlet in parallel lines and with even velocity distribution. When louver dampers are used in the fan outlet with horizontal shafts arranged parallel to the fan shaft, the pressure readings taken beyond the damper will invariably show that the best position of the damper is partly closed and not wide open. If the shafts are vertical, the damper in its wide open position will always offer the least restriction, and the resistance will be less than in any position with the horizontal shafts.

Screens for forced draft fan inlets should always be provided. Serious accidents have occurred in instances where the arms and legs of attendants have been drawn into contact with the impeller. These screens sometimes present a serious obstruction; but they need not be heavier than ⅛-in. wire, nor closer than 2-in. mesh. There have been occasions when inlet screens made of ordinary expanded metal have offered a resistance sufficient to cause a 1-in. drop in pressure in the fan inlet.

Air Leakage in Ducts. All ducts carrying air under pressure must be tight. The leakage that can occur in ordinary ducts is seldom appreciated because the air cannot be seen. Air will leak through joints much more easily than water will. The pressure on a forced draft duct may be 6-in. of water, representing a head of air of 416 feet. In carrying water at a head of this magnitude the utmost precautions would be taken to keep the ducts tight, but with air the importance of this point is apt to be overlooked.

The leakage loss in the average installation is always nearer 20 per cent than 10 per cent. Even concrete ducts do not prevent the leakage. In some large concrete ducts it is so great that pressure cannot be created in them. The inner surfaces of all air ducts, whether concrete or metal, should be liberally coated with a good paint. The larger ducts of the system will have the most leakage, and should be painted while under pressure.

Induced Draft

TO decide upon satisfactory induced draft installation necessitates a great deal of experience and common sense. It is simple enough to figure the weight of the gases from the amount of air supplied to burn the fuel, and if the temperature is known, to figure the volume of those gases. The temperature, however, and consequently the volume, cannot be predetermined accurately. The infiltration through boiler settings, flue connections and economizer is an uncertain quantity; it does not remain constant, but in time increases; the fan, however, must always be capable of overcoming any pressure set up in the fire-box. The infiltering air is cold and not only adds to the weight of the gases but reduces their temperature. An induced draft fan should be selected therefore with plenty of reserve capacity. The driver for the fan should also be large, with at least 20 per cent excess power.

Table 17 may be used as an example of induced draft fan sizes; but the dimensions differ considerably with different manufacturers.

The chief troubles with induced draft fans are mechanical; high speed fans, particularly, becoming unbalanced. The cinders passing through the fan cause a certain amount of erosion. The scroll sheet or roundabout of the fan housing suffers most, and the inlet edges of the fan blades sometimes show signs of wear. In all induced draft fans the scroll sheet should be at least $^3/_{16}$-in. thick. When oil leakage occurs, dust and cinders are deposited on the blades. They pack down tight and form with the oil a heavy hard cake. The leakage oil runs along the shaft through the shaft opening in the housing, and from there is carried into the fan wheel, covering the blades.

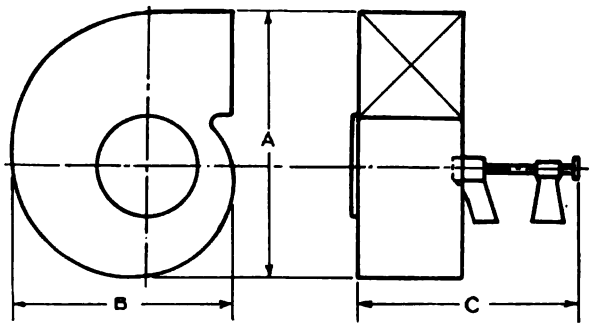

Table 17. Sizes and Weights of Induced Draft Fans.

Boiler Output, H. P.	Fan Outlet Area, Sq. Ft.	INCHES			Weight Complete, Lb.
		A	B	C	
100	1.6	52	48	50	1,000
200	3.2	70	64	65	2,000
400	6.4	95	87	82	3,700
600	9.6	120	110	109	5,500
800	13.00	140	128	120	7,000
1,000	15.00	156	143	138	9,000
2,000	32.00	220	202	146	17,000
3,000	48.00	270	248	170	25,000

Most induced draft installations are of single inlet fans with overhung wheels. The two bearings are then outside of the flow of hot gases. This wheel is satisfactory, provided the shaft is large enough.

The heat of the gases handled by the fan is conducted along the shaft to the bearings, and these bearings must be water-cooled. A short cast iron pedestal set in concrete is a satisfactory support. The concrete can often be brought up almost to the bearing bases; the bearings are then mounted on I-beams securely embedded in the concrete. Built-up structural steel pedestals should be used only for very slow speeds and low powers.

In the larger cities the nuisance caused by the discharge of solid matter from the stacks of power houses must be overcome. The underfeed stoker has to some degree eliminated the discharge of black clouds of smoke. But owing to the high draft pressures used at large boiler loads, the discharge of heavy cinders has been aggravated. In one type of draft fan, the dust and soot are separated from the gases, and are delivered into dust chambers, from which they fall by gravity into collecting hoppers. The cinder-separating induced draft fan has an efficiency of dust removal of 75 per cent. It is substantially a paddle wheel fan of good proportions and takes about 10 per cent more power than the plain fan.

The allowable speed on induced draft fans is considerably less than that on forced draft fans, even when the construction is identical. The temperatures of the gases handled by the induced draft fan range from

Fifth Avenue Building, New York City, operating 1400 H. P. of Heine Standard Boilers.

300 to 750 deg. At lower boiler ratings with the gases passing through the economizer, temperatures may be as low as 300 deg. The flues are usually arranged so that the gases can be by-passed and do not pass through the economizer. With high boiler ratings and the economizer by-passed, temperatures will sometimes be as high as 750 deg. A high fan speed is then required, as the draft loss at these high ratings, even without the economizer, is considerable. In addition, owing to the high temperature, the fan must handle a large volume of gases.

Somewhere between 500 and 700 deg., the elastic limit of iron and mild steel is only 50 per cent of the elastic limit at ordinary temperatures. say of 70 deg. The designers of rotating machinery have found that it is not safe to stress material above one-third the elastic limit. These considerations are borne out specifically by the behaviour of induced draft fans. The desire for high-speed direct-connected units resulted in many installations of the backwardly curved blade fan for induced draft. This practice has been almost entirely discontinued, as the fans were installed for speeds

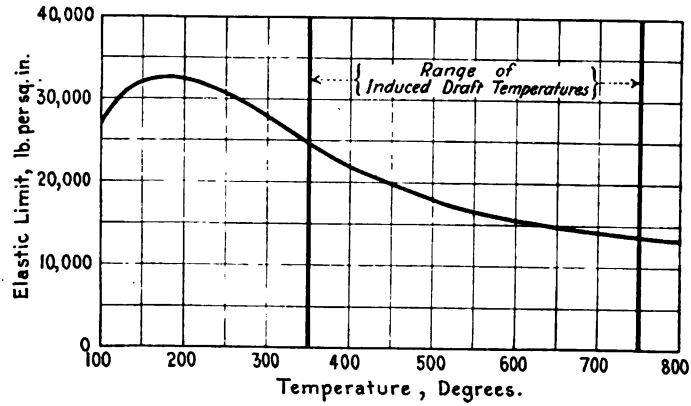

Fig. 133. Variation of Yield Point with Temperature.

that produce stresses of 10,000 lb. per sq. in., and they failed when the elastic limit of the materials was reduced because of the high temperatures. Fig. 133 shows how the elastic limit, or more properly the yield point, varies with the temperature.

The peripheral speed of induced draft fans should be limited to 11,000 ft. per min. It is true that most of the time when the gases are passing through the economizer a fan so limited will be unnecessarily strong. But even though the high temperatures and large volumes occur only seldom the fan must always handle the necessary load.

Load on Induced and Forced Draft Fans. The induced draft fan must take care of all the resistances, from the fire-box through the boiler and economizer. The resistance cannot be overcome by the forced draft fan, because positive pressures would be produced, blowing the gases of combustion out through the leaks. The forced draft fan has the advantage of working with gas of greater density, and should supply the pressure necessary to overcome the resistances as far as the top of the fuel bed.

Suppose the density of the gases handled by the induced draft fan is half that of the air handled by the forced draft fan, a not unusual condition; then to overcome a given resistance the induced draft fan will require twice the power. Consider an installation in which 4 in. of water is required for the forced draft and a static suction of 2 in. of water is required

at the stack end of the economizer. The difference between these two pressures (one positive and the other negative) is 6 in. of water. If the forced draft fan supplied the whole pressure drop of 6 in. the horsepower required would be

$$\frac{0.000158 \times \text{Volume} \times 6}{\text{Fan Efficiency}}$$

If, however, the whole pressure drop was taken care of by the induced draft fan the volume handled would be twice as great and with the same fan efficiency the horsepower will be

$$\frac{0.000158 \times (2 \times \text{Forced Draft Volume}) \times 6}{\text{Fan Efficiency}}$$

$$= 2 \times \text{Forced Draft Horsepower.}$$

The fundamental formula for the work done by a fan shows this difference more clearly. The work done by a fan can be expressed by

$$J = w \times Q \times h \qquad (16)$$

where J is the work, w the density, Q the volume, and h the head in feet of gas of density w. For both forced and induced draft fans the product $(w \times Q)$, which equals the weight of gases, is the same, ignoring very slight change in specific gravity due to the different chemical composition of the two gases. But h for the forced draft is only half the h required to produce the same difference in the water column when the work is done by the induced draft fan. The 6-in. water pressure represents 415 ft. of the cold air and 830 ft. of the hot air. In view of this peculiarity the induced draft fan should do only that work which on account of the nature of the service cannot be done by the forced draft fan.

Testing of Induced Draft Fans. The greatest difficulty in testing these fans as installed is to locate a straight run of pipe where a steady, uniform and straight gas flow can be obtained. The pitot tube, Fig. 131, gives some indication of the fan performance. The volume of gases is sometimes determined from the weight of coal burned and the CO_2 readings. Theoretically the results should be fairly accurate, but practically they are uncertain, owing partly to the fact that a small difference in the percentage of CO_2 corresponds to a great difference in volume of the air. The densities of the hot gases of combustion and of the cold infiltering air differ greatly, so that the mixture stratifies, and it is extremely difficult to secure a fair sample. The leakage is through the walls of the passages; consequently the air almost entirely surrounds the moving mass of gas and the percentage of CO_2 will be greatest near the center. Even after passing through the fan this stratification is still evident.

The most satisfactory method of testing an induced draft fan is to divide the fan inlet duct into say 16 equal areas and take a reading of velocity with the pitot tube at the center of each of these areas. Knowing the temperature and consequently the gas density, the volume of the gases can be calculated from these readings. The formulas for the testing of forced draft fans are applicable. The velocity should be measured on the inlet, rather than the outlet side. The flow to the inlet is almost invariably accompanied by an increase in velocity, and is a maximum at the fan inlet. The movement of the gases tends then to become steady and uniform, and the velocity can be measured accurately in a short run of straight flue.

On the outlet side the fan wheel causes local eddies in the air, so that any velocity determination is extremely difficult. The test must be made with the pitot tube or its close equivalent.

In the smaller plants the induced draft fan may furnish all the necessary draft, the stack being only a short connection to discharge the hot gases above the roof. This is good practice from the standpoint of cost but a plant of any size may create a nuisance, as the discharged soot and cinders settle thickly on nearby structures. Most of the larger plants use fair sized

stacks and when operating at low rating by-pass the induced draft fan. Two dampers are then required; one on the fan inlet and the other in the by-pass; the second damper separates the suction and discharge of the fan. The fan damper should be on the inlet rather than on the outlet side, because the dead pockets formed by a fan with an outlet damper should be avoided in induced draft flues. When the fan is by-passed and the outlet damper closed, there is no movement of gas in the whole fan housing. Such an arrangement has been known to result in an explosion. The damper in the by-pass should be as tight as possible. The pressure difference between fan outlet and inlet is equal to the full static pressure developed

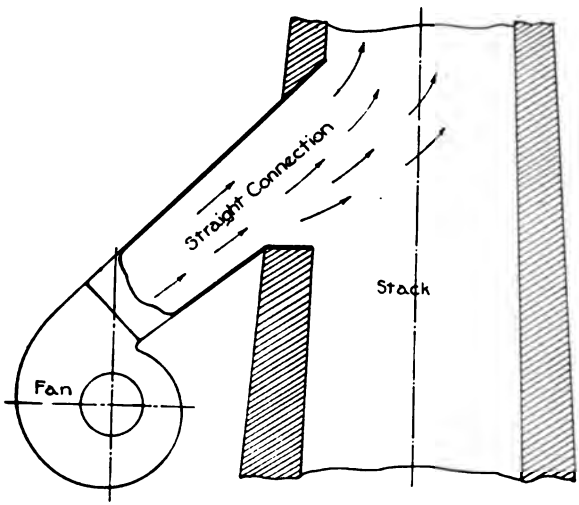

Fig. 134. Ideal Connection of Fan to Stack.

by the fan and any leakage space around the by-pass damper will permit a recirculation of gas, which will reduce the capacity of the fan for handling fresh products of combustion from the boiler.

In laying out the connection from the fan outlet to the stack port all bends (sharp ones especially) should be avoided. The static pressure in this connecting duct is below atmosphere only by the amount of suction produced by the stack. When air flows around bends the pressure is greater on the outside of the curve. If a pressure around a bend becomes greater than the stack suction, some of the products of combustion leak into the boiler room. Even a very small amount of this leakage is objectionable, as it makes the boiler house unpleasant to work in. Fig. 134 shows an ideal connection between fan and stack.

A part of Boiler Room No. 2 of the Federal Sugar Refining Co., Yonkers, N. Y.
7606 H. P. of Heine Standard Boilers, with Murphy Stokers.

CHAPTER 8

PIPING AND ACCESSORIES

THE same care given to the design and installation of boilers and engines should be given to the piping system. The object of any system of boiler room piping is to conduct a fluid safely from one point to another. This must be done with economy, but no commercial consideration should be allowed to interfere with the fundamental requirement of safety. More accidents originate in defective piping than in defective boilers. The failure of pipe, fittings and valves is due not as a rule to excessive fluid pressure, but to the presence of water in steam lines, excessive and continued vibration, changes of temperature, and faulty methods of support.

Water in steam lines is a source of danger, and every precaution should be taken to avoid its presence.

The chief danger from water in steam lines is *water-hammer*, which generally results from admitting high pressure steam into a cold pipe containing condensed water. In pipes nearly horizontal, *Stromeyer* has shown that under these conditions a slug of water may attain sufficient velocity to burst massive fittings. He cites an instance where a large boiler stop valve disk was turned inside out and driven into the boiler against the steam pressure. Piping systems should be designed either to avoid the possibility of water accumulating on top of closed valves or to provide ample and accessible drainage facilities. This requirement is of especial importance in connecting boilers into a main steam line. Where pipes are connected to safety valves to enable them to discharge above the roof, the connection to the safety valve casing should be by means of a Tee. A pipe—at least 1½ in.—should be taken from a blank flange on the lower leg of the Tee to insure permanent drainage; and this pipe should be without a valve or other obstruction, but should discharge into the atmosphere or blow-off tank.

Piping should be erected so that water-collecting traps or pockets will not be formed. Large drain pipes should be provided wherever pockets cannot be avoided. Drains should be placed at the bases of risers and wherever water can accumulate because of the closing of a stop valve. If drain valves are not likely to be attended properly, drains should be trapped, so that the water will be removed automatically. Steam supply branches should be connected to the upper side of mains. Drains should be connected to the lowest point of reducing flanges, reducing tees, and taper reducers. Steam lines should be installed with a uniform grade of about 1 in. to 40 ft., so that they will drain to some predetermined point. Drainage is more complete if the water and steam flow in the same direction.

Vibration in piping is a source of trouble and danger to the pipe itself, and to joints, valves, fittings, supports and anchors. It is often set up by water slugs delivered by ill-designed or carelessly operated boilers, or from accumulations of condensed water. Modern power plant practice favors high steam velocities, which tend to diminish condensation. But slugs of water are then driven along at higher velocities, and as their kinetic energy increases as the square of their velocity, the vibration trouble is aggravated. Consequently, drainage facilities cannot be neglected because of high velocity alone. As a matter of fact, condensate is more apt to be carried past drip-pockets and separators by high, than by low velocity. Vibration is also caused by the intermittent flow of steam to reciprocating engines, unless separators or receivers are installed in the steam lines close to the engines.

Expansion and Contraction. Pipes are bound to expand when heated by the entering steam and hot water and to contract as the temperature falls with the shutting off of the steam or water. The increase in the circumference of a pipe because of an increase in its temperature is of little practical consequence. The lengthwise (linear) expansion of a pipe is great, however, for pipes used in power plant practice. The force exerted by expanding and contracting pipe is practically irresistible. Therefore, piping must be anchored, and then the direction in which it will expand and contract can be predetermined and the expansion and contraction absorbed, so that it will not damage the pipe itself, the fittings forming a part of the line, or the apparatus to which the pipe is connected.

Selection of System. The selection of the piping system should be based upon the factors of uninterrupted service, low cost of operation, and low cost of installation. The piping system, boiler and prime movers should be selected at the same time, and to form a single unit. If uninterrupted plant operation is of value, piping must be so designed that its failure in part will not shut down the whole plant. The point to which it is justifiable to carry refinements insuring continuous plant operation depends upon the commercial value of uninterrupted service.

The layout of essential power plant piping should be consistent. If steam mains are well protected, feed mains, exhaust mains, oil lines, and other essential portions of the piping equipment should be protected in the same way. Heater, economizer or condenser connections need not be thus refined, because operation without them is possible, although it may be decidedly undesirable. This is especially true of plants containing more than one of each economic auxiliary. These should be connected so that they can be operated temporarily at an overload with reduced economy, should one unit or its connections fail. The feed-water temperature may be 150 deg. when two heaters are used instead of three, but even that is preferable to cold water. Overloaded condensers may mean a vacuum much less than normal, but this is preferable to exhausting to atmosphere.

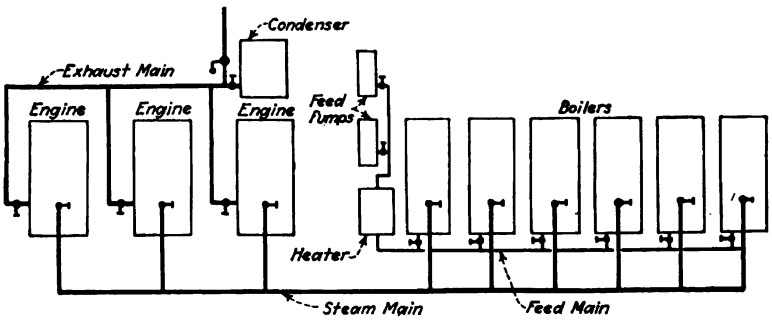

Fig. 135. Diagram of End to End Single Header System.

The *single header system,* Figs. 135 and 136, is simple and the first cost is low. For the end-to-end arrangement of boiler room and engine room, Fig. 135, this system is not reliable, as a break in one of the mains shuts down the entire plant. For the back-to-back arrangement of boiler room and engine room, Fig. 136, the feed-water header and exhaust header are still undesirable, although the steam header can be divided by valves and part of the plant operated if some one section fails.

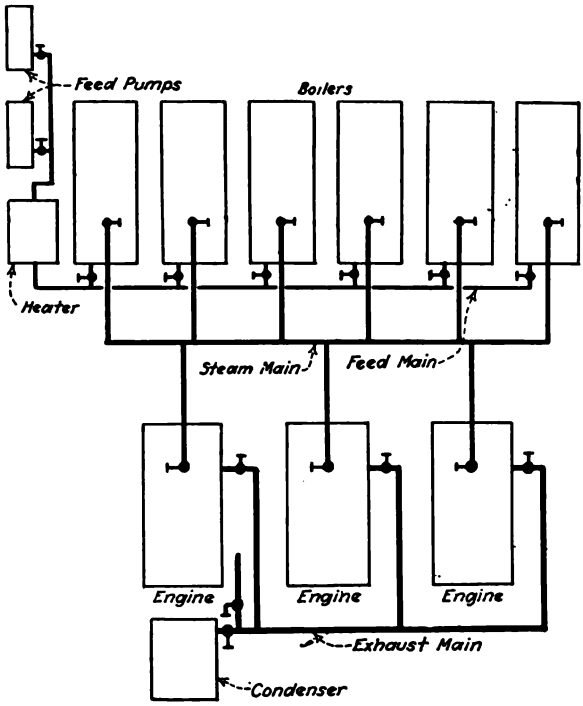

Fig. 136. Diagram of Back to Back Single Header System.

With the *duplicate header system,* Figs. 137 and 138, the plant is much more reliable, but the first cost of the system is high, and each piece of apparatus must be connected to two independent headers. Unless both headers are in continuous operation, or are located at a considerable distance from the apparatus, joints and connections are subjected to severe strains due to expansion and contraction.

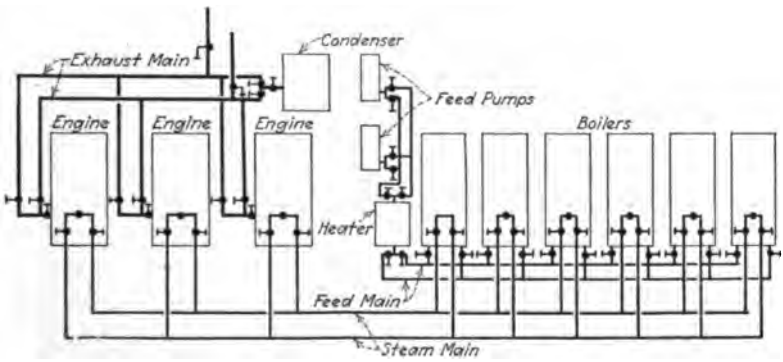

Fig. 137. Diagram of Duplicate Header System.

Federal Sugar Refining Co., Yonkers, N. Y. This Company has installed 7606 H. P. of Heine Standard Boilers.

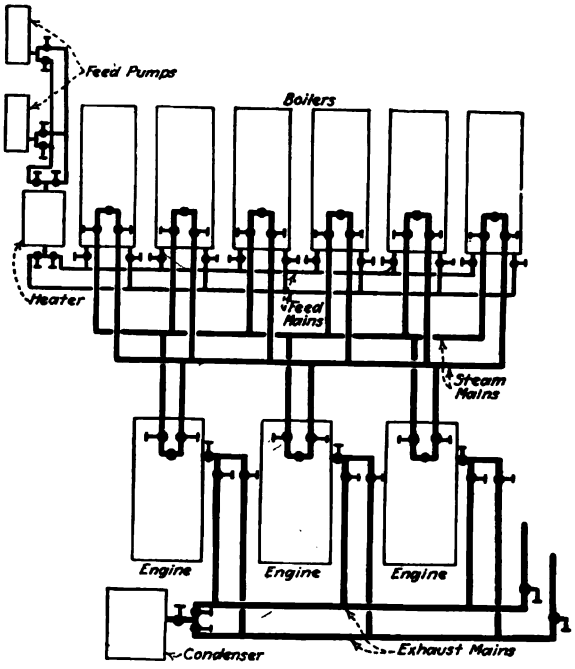

Fig. 138. Diagram of Duplicate Header System.

The *loop or ring header system,* Figs. 139 and 140, is more reliable than the single header system, but its first cost is high. It has advantages when the physical limitations of property or buildings prevent the installation of a unit system.

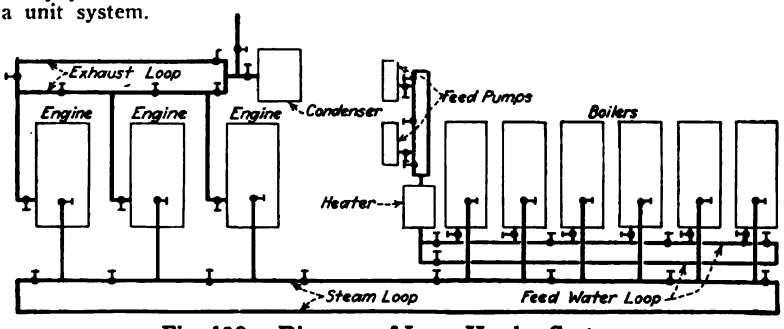

Fig. 139. Diagram of Loop Header System.

The *unit system,* Fig. 141, represents the best standard practice for large plants, but it can well be used in plants of moderate size. The complete plant is virtually composed of small independent units, any one of which can be shut down without affecting the others. The first cost of this system is high, but is more than justified when uninterrupted service must be had. The high first cost is due not alone to the piping system but also to the fact that each engine or turbine has its own separate boilers, condensers, feed pumps, circulating pumps, vacuum pumps, and feed-water heaters. Separate coal-and-ash handling equipment is also supplied for large units.

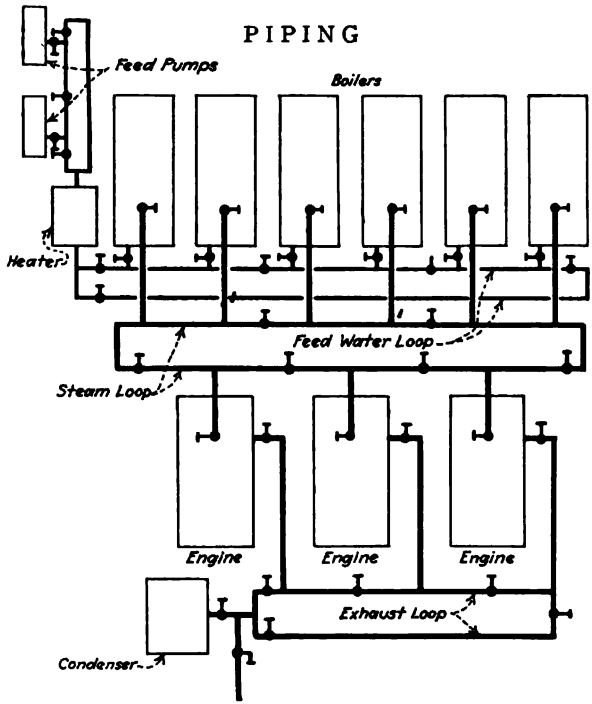

Fig. 140. Diagram of Loop Header System.

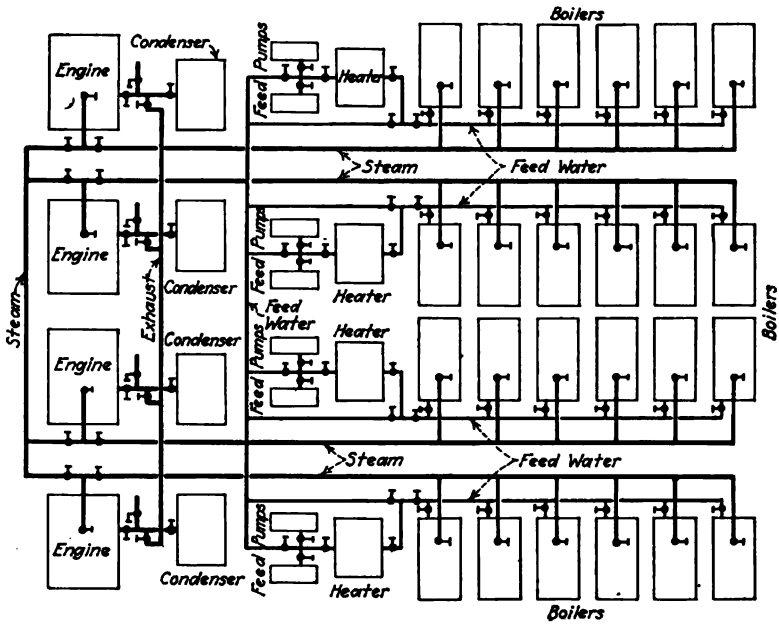

Fig. 141. Diagram of Unit System.

In a modified unit system, Fig. 142, the complete plant is divided into distinct sections, each entirely independent of the others and operated as a complete plant. This system is not so reliable as the unit system because sections of the same mains must be used; fewer auxiliaries however are required. It is not desirable for plants which operate at a high load factor, but is adapted to those whose daily light load period is long enough so that the mains can be repaired. The number of the sections into which the plant is divided depends upon the load characteristic. If a plant requires two-thirds of its capacity for its lightest load, three sections would be necessary. A plant operated at half load for the greater part of each day could be divided into two sections.

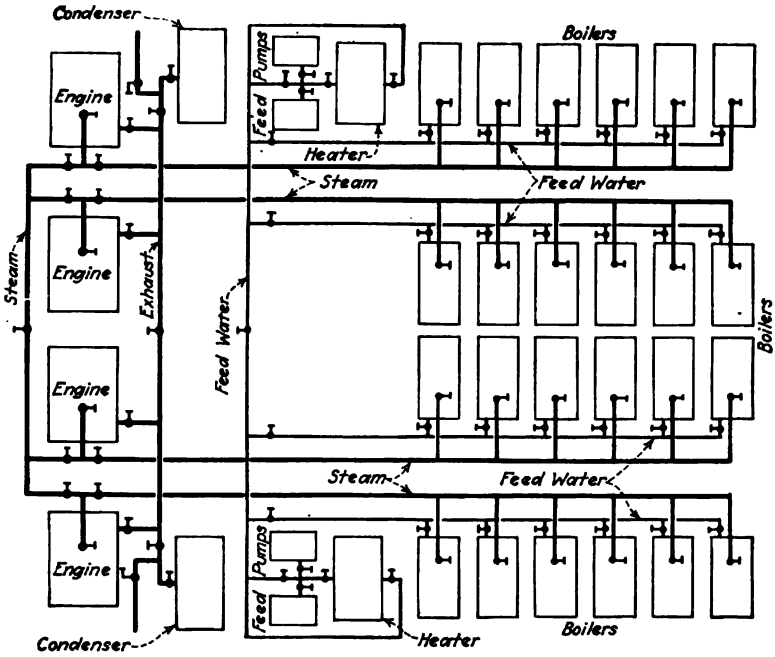

Fig. 142. Diagram of Divided or Sectional System.

The modified unit system, Fig. 142, actually requires but two auxiliaries of each kind; each set of auxiliaries however should be able to handle the light load for the entire plant. If the capacity of each set is sufficient for full load, even though it is overloaded, the danger of shutdown due to failure of mains or connections is greatly reduced. A complete set of auxiliaries for each section of the plant adds materially to its flexibility, economy, and reliability. In deciding upon the number of sections, the size and accessibility of the mains and the time required for their repairs should be considered.

Piping should always be *accessible,* for safety and economy. The accessibility possible for any given set of physical conditions should be a factor in the selection of a piping system, because it affects the time required for repairs and therefore the reliability of plant operation.

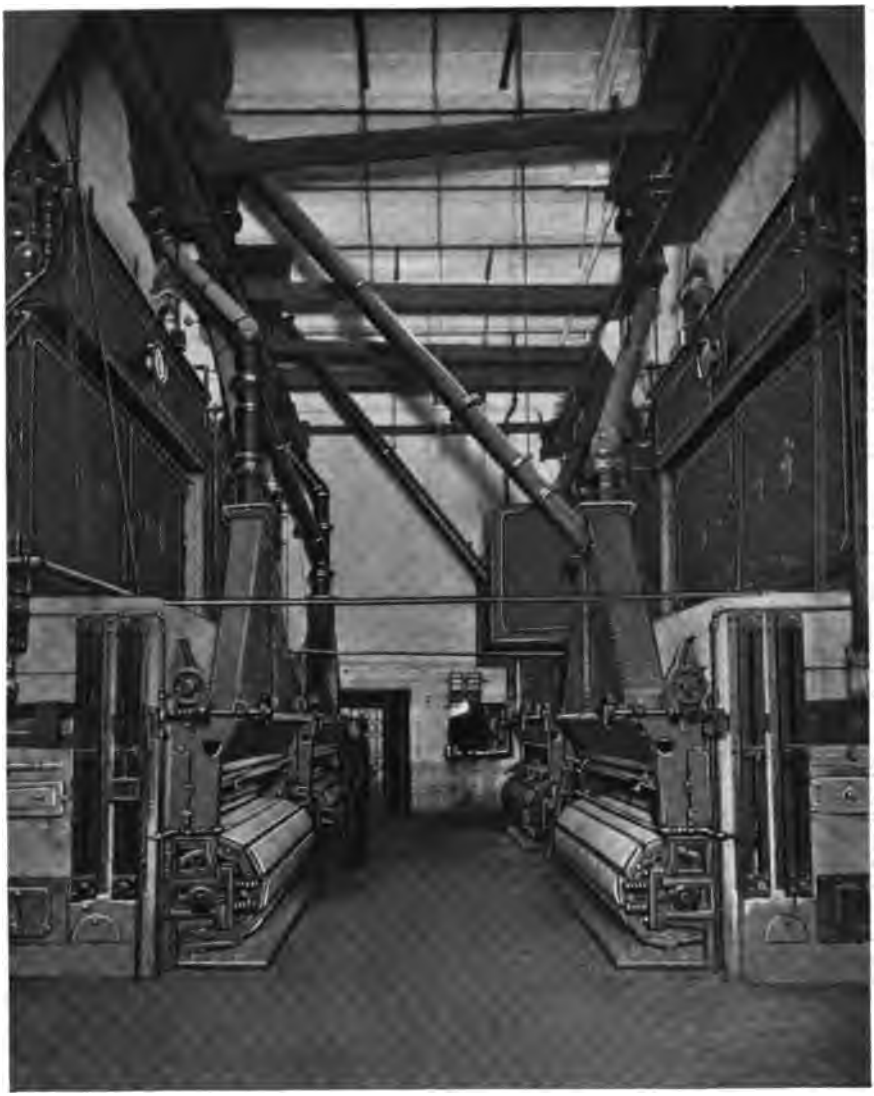

A part of the 8550 H. P. installation of Heine Standard Boilers and Heine Superheaters in the New York Central Railroad Terminal, New York City. This company operates 18,000 H. P. of Heine Boilers.

The *durability* of boiler room piping has an important effect on the continuity of service. Irrespective of its first cost, the best pipe and pipe-fitting material, will be the cheapest in the long run, for any but the most temporary installations.

A *diagramatic layout* of boiler room and engine room piping should be made for every plant, and a copy of this diagram posted in a conspicuous and accessible place in both boiler and engine room. The diagram should be large enough so that all the lines and captions can be quickly distinguished. All valves should be numbered and the diagram accompanied by a tabulation of the lines or equipment controlled by each valve. The diagram can well be made as a tracing. Any requisite number of copies can then be made, and it can be easily corrected and kept up to date in the event of changes in, or additions to, the piping system.

Identification of Piping

A STANDARDIZED *color scheme* is a practical aid to the identification of piping. The report of the *A. S. M. E. Committee on Identification of Power House Piping,* suggests that color shall be used on flanges, valves and fittings only, the piping itself being painted to conform to the color scheme of the room. The colors recommended are as follows:

Division	Color
Steam—	
High pressure	White
Exhaust system	Buff
Water—	
Fresh water, low pressure	Blue
Fresh water, high pressure in boiler feed lines	Blue and White
Salt water	Green
Oil, delivery and discharge	Brass or Bronze Yellow
Pneumatic	Gray
Gas—	
City lighting service	Aluminum
Gas engine service	Black, red flanges
Fuel Oil	Black
Refrigerating—	
Pipe	Gray
Flanges and fittings	White and Green Stripes

Pipe and Piping Materials

PRACTICALLY all boiler room piping is made of either mild steel or wrought iron. Because of its lower price, steel pipe is more common than wrought iron, and for most purposes fulfills all requirements.

Wrought Iron pipe is more durable than steel pipe, especially when buried under ground or subjected to extreme exposure. It is said not to corrode as easily as steel and therefore is to be preferred for blow-off pipes, drips and drains, and wherever corrosion may be severe. The term "wrought iron pipe" is often used loosely, for both steel and wrought iron pipe. In the trade steel pipe is furnished, unless genuine wrought iron pipe is specified.

Cast iron pipe is used for low pressure work. Because of its low tensile strength and consequent great weight, it is seldom used for high pressure pipe. Cast iron is used however in the construction of headers, although it is not recommended for high temperatures. For complicated headers with a number of branch lines, a casting is cheaper than fittings, and the number of joints is considerably less.

Cast steel is used for headers, especially for highly superheated steam, and resists high temperatures much better than cast iron. The cost of cast steel is high, and it is difficult to secure uniform castings, free from hidden defects.

Brass withstands the corrosive action of hot water better than iron or steel, and is sometimes used for feed-water lines and headers. Its high cost limits its use even for this service and practically prohibits its use in other parts of a piping system. It is weak and brittle at high temperatures.

Copper is expensive, deteriorates rapidly under high temperatures, and weakens under recurrent stress variations. It was formerly popular in marine service because of its flexibility, although this is offset by its low tensile strength.

The use of high pressures and high degrees of superheat is increasing, so that the *total temperature* of water and steam must be considered in selecting materials. Table 18 gives the average tensile strength of metals at different temperatures, as determined by the *Crane Company*. The table applies to the initial effect of high temperatures, but does not indicate the effect of continued high temperature, as the time each specimen was heated had to be limited. The results show however that cast iron undergoes a slow but constant loss of strength when subjected to temperatures over 400 deg., and that steel does not undergo any material decrease, other than its initial loss of strength, because of continued temperatures as high as 800 degrees.

Table 18. Effect of Temperature on the Tensile Strength of Metals.

Material	AVERAGE TENSILE STRENGTH, LB. PER SQ. IN. AT TEMPERATURE NOTED								
	70	300	450	600	750	900	950	1000	1030
Steam metal	31,780	26,370	21,900	12,180	10,280	.....	6,630	.....	.....
Special brass	35,345	34,260	27,630	16,100	13,000	9,530	.....	6,400	.....
Navy "G" bronze	34,170	36,025	33,050	21,380	19,640	.....	9,650	.....	.....
Hard metal	33,735	34,280	31,180	23,150	19,170	.....	10,825	5,710	.....
Cast Monel metal	52,870	.....	47,200	39,450	41,787	.....	.....	.....	26,400
Soft cast iron	22,060	23,260	20,730	21,240	21,925	.....	.....	19,820	.....
Ferro steel	32,692	33,290	33,400	33,110	32,860	25,780	.....	27,310	.....
Malleable iron	37,625	33,505	33,280	34,000	34,055	.....	27,110	.....	.....
Cast steel	73,325	76,570	81,167	67,366	41,388	.....	.....	17,568	.....

Commercial wrought iron and steel pipe is divided into four *weight classifications*; standard, extra heavy, double extra heavy and large O.D. A fifth classification, lighter than standard pipe and known as "merchants pipe," was formerly made but its use has generally been discontinued.

Standard, extra heavy and double extra heavy commercial iron pipe is designated by its nominal internal diameter, in sizes from ⅛ to 12 inches. The external diameter of extra heavy and double extra heavy pipe is the same as that of standard pipe, and the internal diameter therefore is smaller. Above the 12-in. size, pipe is usually classed as "large O.D." and is designated by its actual outside diameter, although some manufacturers list sizes with nominal internal diameters of 13, 14 and 15 inches.

Commercial wrought iron and steel pipe is butt-welded in sizes 1½ in. or less for wrought iron, and 3 in. or smaller for steel. The larger sizes are lap-welded.

The principal dimensions and the weight of standard wrought iron and steel pipe are given in Table 19.

The same data for extra heavy and double extra heavy pipe are given in Table 20 and 21, respectively.

Table 19. Dimensions and Weights of Standard Pipe.
(National Tube Company, 1915)

Size	Diameter		Thickness	Threads per Inch	Weight per Foot		Circumference		Transverse Area			Length of Pipe per Sq. Foot		Length to Contain One Cu. Ft.	U.S.Gals. in One Lin. Ft. of Pipe	Water in One Ln. Ft. of Pipe
	External	Internal			Plain Ends	Threads and Coup.	External	Internal	External	Internal	Metal	Ext. Surface	Int. Surface			
	In.	In.	In.		Lb.	Lb.	In.	In.	Sq. In.	Sq. In.	Sq. In.	Ft.	Ft.	Ft.	Gal.	Lb.
1/8	0.405	0.269	0.068	27	0.244	0.245	1.272	0.845	0.129	0.057	0.072	9.431	14.199	2533.775	0.003	0.025
1/4	.540	.364	.088	18	.424	.425	1.696	1.144	.229	.104	.125	7.073	10.493	1383.789	.005	.045
3/8	.675	.493	.091	18	.567	.568	2.121	1.549	.358	.191	.167	5.658	7.747	754.360	.010	.083
1/2	.840	.622	.109	14	.850	.852	2.639	1.954	.554	.304	.250	4.547	6.141	473.906	.016	.132
3/4	1.050	.824	.113	14	1.130	1.134	3.299	2.589	.866	.533	.333	3.637	4.635	270.034	.028	.231
1	1.315	1.049	.133	11½	1.678	1.684	4.131	3.296	1.358	.864	.494	2.904	3.641	166.618	.045	.375
1¼	1.660	1.380	.140	11½	2.272	2.281	5.215	4.335	2.164	1.495	.669	2.301	2.767	96.275	.078	.648
1½	1.900	1.610	.145	11½	2.717	2.731	5.969	5.058	2.835	2.036	.799	2.010	2.372	70.733	.106	.883
2	2.375	2.067	.154	11½	3.652	3.678	7.461	6.494	4.430	3.355	1.075	1.608	1.847	42.913	.174	1.455
2½	2.875	2.469	.203	8	5.793	5.819	9.032	7.757	6.492	4.788	1.704	1.328	1.547	30.077	.249	2.076
3	3.500	3.068	.216	8	7.575	7.616	10.996	9.638	9.621	7.393	2.228	1.091	1.245	19.479	.384	3.205
3½	4.000	3.548	.226	8	9.109	9.202	12.566	11.146	12.566	9.886	2.680	0.954	1.076	14.565	.514	4.286
4	4.500	4.026	.237	8	10.790	10.889	14.137	12.648	15.904	12.730	3.174	.848	0.948	11.312	.661	5.519
4½	5.000	4.506	.247	8	12.538	12.642	15.708	14.156	19.635	15.947	3.688	.763	.847	9.030	.828	6.913
5	5.563	5.047	.258	8	14.617	14.810	17.477	15.856	24.306	20.006	4.300	.686	.756	7.198	1.039	8.673
6	6.625	6.065	.280	8	18.974	19.185	20.813	19.054	34.472	28.891	5.581	.576	.629	4.984	1.501	12.524
7	7.625	7.023	.301	8	23.544	23.769	23.955	22.063	45.664	38.738	6.926	.500	.543	3.717	2.012	16.793
8	8.625	8.071	.277	8	24.696	25.000	27.096	25.356	58.426	51.161	7.265	.442	.473	2.815	2.658	22.179
8	8.625	7.981	.322	8	28.554	28.809	27.096	25.073	58.426	50.027	8.399	.442	.478	2.878	2.599	21.687
9	9.625	8.941	.342	8	33.907	34.188	30.238	28.089	72.760	62.786	9.974	.396	.427	2.294	3.262	27.218
10	10.750	10.192	.279	8	31.201	32.000	33.772	32.019	90.763	81.585	9.178	.355	.374	1.765	4.238	35.366
10	10.750	10.136	.307	8	34.240	35.000	33.772	31.843	90.763	80.691	10.072	.355	.376	1.785	4.192	34.980
10	10.750	10.020	.365	8	40.483	41.132	33.772	31.479	90.763	78.855	11.908	.355	.381	1.826	4.096	34.184
11	11.750	11.000	.375	8	45.557	46.247	36.914	34.558	108.434	95.033	13.401	.325	.347	1.515	4.937	41.196
12	12.750	12.090	.330	8	43.773	45.000	40.055	37.982	127.676	114.800	12.876	.299	.315	1.254	5.964	49.767
12	12.750	12.000	.375	8	49.562	50.706	40.055	37.699	127.676	113.097	14.579	.299	.318	1.273	5.875	49.029
13	14.000	13.250	.375	8	54.568	55.824	43.982	41.626	153.938	137.886	16.052	.272	.288	1.044	7.163	59.775
14	15.000	14.250	.375	8	58.573	60.375	47.124	44.768	176.715	159.485	17.230	.254	.268	0.903	8.285	69.138
15	16.000	15.250	.375	8	62.579	64.500	50.265	47.909	201.062	182.654	18.408	.238	.250	.788	9.489	79.182
17 O. D.	17.000	16.214	.393	8	69.704	72.602	53.407	50.938	226.980	206.476	20.504	.224	.235	.697	10.726	89.509
18 O. D.	18.000	17.182	.409	8	76.840	80.482	56.549	53.979	254.469	231.866	22.603	.212	.222	.621	12.045	100.516
20 O. D.	20.000	19.182	.409	8	85.577	89.617	62.832	60.262	314.159	288.986	25.173	.190	.199	.498	15.012	125.278

Penn Mutual Life Insurance Building, Philadelphia, Pa., equipped with Heine Standard Boilers.

Table 20. Dimensions and Weight of Extra Heavy Pipe.
(National Tube Company, 1915)

Size	Diameter		Thickness	Threads per Inch	Weight per Foot, Plain Ends	Circumference		Transverse Area			Length of Pipe per Square Foot		Length of Pipe Containing One Cu. Ft.
	External	Internal				External	Internal	External	Internal	Metal	Ext. Surface	Int. Surface	
	In	In.	In.		Lb.	In.	In.	Sq. In.	Sq In.	Sq. In.	Ft.	Ft.	Ft.
⅛	0.405	0.215	.095	27	0.314	1.272	0.675	0.129	0.036	0.093	9.431	17.766	3966.393
¼	.540	.302	.119	18	.535	1.696	.949	.229	.072	.157	7.073	12.648	2010.290
⅜	.675	.423	.126	18	.738	2.121	1.329	.358	.141	.217	5.658	9.030	1024.689
½	.840	.546	.147	14	1.087	2.639	1.715	.554	.234	.320	4.547	6.995	615.017
¾	1.050	.742	.154	14	1.473	3.299	2.331	.866	.433	.433	3.637	5.147	333.016
1	1.315	.957	.179	11½	2.171	4.131	3.007	1.358	.719	.639	2.904	3.991	200.193
1¼	1.660	1.278	.191	11½	2.996	5.215	4.015	2.164	1.283	.881	2.301	2.988	112.256
1½	1.900	1.500	.200	11½	3.631	5.969	4.712	2.835	1.767	1.068	2.010	2.546	81.487
2	2.375	0.939	.218	11½	5.022	7.461	6.092	4.430	2.953	1.477	1.608	1.969	48.766
2½	2.875	2.323	.276	8	7.661	9.032	7.298	6.492	4.238	2.254	1.328	1.644	33.976
3	3.500	2.900	.300	8	10.252	10.996	9.111	9.621	6.605	3.016	1.091	1.317	21.801
3½	4.000	3.364	.318	8	12.505	12.566	10.568	12.566	8.888	3.678	0.954	1.135	16.202
4	4.500	3.826	.337	8	14.983	14.137	12.020	15.904	11.497	4.407	.848	.0998	12.525
4½	5.000	4.290	.355	8	17.611	15.708	13.477	19.635	14.455	5.180	.763	.890	9.962
5	5.563	4.813	.375	8	20.778	17.477	15.120	24.306	18.194	6.112	.686	.793	7.915
6	6.625	5.761	.432	8	28.573	20.813	18.099	34.472	26.067	8.405	.576	.663	5.524
7	7.625	6.625	.500	8	38.048	23.955	20.813	45.664	34.472	11.192	.500	.576	4.177
8	8.625	7.625	.500	8	43.388	27.096	23.955	58.426	45.663	12.763	.442	.500	3.154
9	9.625	8.625	.500	8	48.728	30.238	27.096	72.760	58.426	14.334	.396	.442	2.465
10	10.750	9.750	.500	8	54.735	33.772	30.631	90.763	74.662	16.101	.355	.391	1.929
11	11.750	10.750	.500	8	60.075	36.914	33.772	108.434	90.763	17.671	.325	.355	1.587
12	12.750	11.750	.500	8	65.415	40.055	36.914	127.676	108.434	19.242	.299	.325	1.328
13	14.000	13.000	.500	8	72.091	43.982	40.841	153.938	132.732	21.206	.272	.293	1.085
14	15.000	14.000	.500	8	77.431	47.124	43.982	176.715	153.938	22.777	.254	.272	0.935
15	16.000	15.000	.500	8	82.771	50.265	47.124	201.062	176.715	24.347	.238	.254	.815

The permissible variation in weight is 5% above and 5% below.
Furnished with plain ends and in random lengths unless otherwise ordered.

Table 21. Dimensions and Weight of Double Extra Heavy Pipe.
(National Tube Company, 1915)

Size	Diameter		Thickness	Threads per Inch	Weight per Foot, Plain Ends	Circumference		Transverse Area			Length of Pipe per Square Foot		Length of Pipe Containing One Cu. Ft.
	External	Internal				External	Internal	External	Internal	Metal	Ext. Surface	Int. Surface	
	In.	In.	In.		Lb.	In.	In.	Sq. In.	Sq. In.	Sq. In.	Ft.	Ft.	Ft.
½	0.840	0.252	0.294	14	1.714	2.639	0.792	0.554	0.050	0.504	4.547	15.157	2887.165
¾	1.050	.434	.308	14	2.440	3.299	1.363	.866	.148	.718	3.637	8.801	973.404
1	1.315	.599	.358	11½	3.659	4.131	1.882	1.358	.282	1.076	2.904	6.376	510.998
1¼	1.660	.896	.382	11½	5.214	5.215	2.815	2.164	.630	1.534	2.301	4.263	228.379
1½	1.900	1.100	.400	11½	6.408	5.969	3.456	2.835	.950	1.885	2.010	3.472	151.526
2	2.375	1.503	.436	11½	9.029	7.461	4.722	4.430	1.774	2.656	1.608	2.541	81.162
2½	2.875	1.771	.552	8	13.695	9.032	5.564	6.492	2.464	4.028	1.328	2.156	58.457
3	3.500	2.300	.600	8	18.583	10.996	7.226	9.621	4.155	5.466	1.091	1.660	34.659
3½	4.000	2.728	.636	8	22.850	12.566	8.570	12.566	5.845	6.721	0.954	1.400	24.637
4	4.500	3.152	.674	8	27.541	14.137	9.902	15.904	7.803	8.101	.848	1.211	18.454
4½	5.000	3.580	.710	8	32.530	15.708	11.247	19.635	10.066	9.569	.763	1.066	14.306
5	5.563	4.063	.750	8	38.552	17.477	12.764	24.306	12.966	11.340	.686	0.940	11.107
6	6.625	4.897	.864	8	53.160	20.813	15.384	34.472	18.835	15.637	.576	.780	7.646
7	7.625	5.875	.875	8	63.079	23.955	18.457	45.664	27.109	18.555	.500	.650	5.312
8	8.625	6.875	.875	8	72.424	27.096	21.598	58.426	37.122	21.304	.442	.555	3.879

The permissible variation in weight is 10% above and 10% below.
Furnished with plain ends and in random lengths unless otherwise ordered.

Table 22. Approximate Weight Per Foot of Large O. D. Pipe.

Outside Diameter of Pipe	THICKNESS, INCHES							
	¼	3/16	⅜	7/16	½	9/16	⅝	¾
Inches	Pounds	Pounds	Pounds	Pounds	Pounds	Pounds	Pounds	Pounds
14	36.71	45.68	54.56	63.37	72.09	80.72	89.27	106.00
15	39.38	49.02	58.57	68.04	77.43	86.73	95.95	114.00
16	42.05	52.35	62.57	72.71	82.77	92.74	102.62	122.00
17	44.72	55.69	66.58	77.38	88.11	98.74	109.30	130.00
18	47.39	59.03	70.58	82.06	93.45	104.75	115.97	138.00
20	57.00	65.70	78.59	91.40	104.13	116.77	129.33	154.00
21	59.20	69.04	82.60	96.07	109.47	122.78	136.00	162.00
22	62.60	72.38	86.60	100.75	114.81	128.78	142.68	170.00
24	68.00	85.00	94.61	110.09	125.49	140.80	156.03	186.00
26	74.00	93.00	102.62	119.44	136.17	152.81	169.38	202.00
28	80.00	100.00	120.00	128.78	146.85	164.83	182.73	218.00
30	85.00	107.00	128.00	138.13	157.53	176.84	196.07	234.00

Large O.D. pipe is generally made in outside diameters of from 14 to 30 in., and in thicknesses ranging from ¼ to ¾ inches. Table 22 gives the weight of large O.D. pipe of standard thicknesses.

Cold drawn steel tubing can be obtained in regular pipe sizes from ⅛ to 4 in.; and in the standard, extra heavy and double extra heavy weights, as well as in special tubing dimensions and weights.

The pipe weight should be selected to give durability and to maintain safety, rather than for initial safety. The standard hydrostatic test pressures, to which pipes are subjected at the mills, exceed even modern power plant pressures; the initial ultimate strength of pipe is greater than any pressure stress likely to occur in ordinary practice.

The following formula gives the approximate pressure at which pipe will burst:

$$P = \frac{2\,T\,S}{D} \qquad (17)$$

P = Bursting pressure, lb. per sq. in.
T = Thickness of pipe wall, inches
D = Outside diameter of pipe, inches
S = Tensile strength of material, lb. per sq. in.

Machinery's Handbook gives the value of S, determined by actual bursting tests, as 40,000 for butt-welded steel pipe and 50,000 for lap-welded steel pipe. Table 23 of bursting pressures, is based on the above formula.

Butt-welded pipe in sizes 3 in. and smaller and lap-welded pipes in sizes 3½ in. and larger, are used in calculating the table. It is stated that the accuracy of the figures has been checked by exhaustive tests conducted by the National Tube Company.

The pressures given in Table 23 are the approximate pressures at which new pipe will burst. In designing or selecting piping, a factor of safety is used ranging from six to fifteen, depending upon the severity of the service, the degree of exposure or corrosive action encountered, the durability desired, and the probability of future operation at increased pressure.

The second edition of the specifications issued by the *Power Plant Piping Society* recommends that all pipe (except boiler feed lines) be wrought steel with welded seams, butt-welded for the 2-in. and smaller sizes and lap-welded for the 2½-in. and larger sizes. (General commercial steel pipe is butt-welded in the 3-in. and smaller sizes.)

Old National Bank Building, Spokane, Wash., equipped with Heine Standard Boilers.

Table 23. Approximate Bursting Pressures for Steel Pipe.

Size of Pipe, Inches	BURSTING PRESSURE, POUNDS PER SQUARE INCH		
	Standard	Extra Heavy	Double Extra Heavy
¼	13,032	17,624	.....
⅜	10,784	14,928	.....
½	10,384	14,000	28,000
¾	8,608	11,728	23,464
1	8,088	10,888	21,776
1¼	6,744	9,200	18,408
1½	6,104	8,416	16,840
2	5,184	7,336	15,360
2½	5,648	7,680	14,680
3	4,936	6,856	13,714
3½	5,610	7,950	15,900
4	5,266	7,480	14,970
4½	4,940	7,100	14,200
5	4,630	6,740	13,480
6	4,220	6,550	13,040
7	3,940	6,520	11,470
8	3,730	5,780	10,140
9	3,550	5,190	.....
10	3,390	4,650	.....
12	2,940	3,920	.....

Size of Pipe, Inches	BURSTING PRESSURE, POUNDS PER SQUARE INCH	
	Large O. D., ⅜-in. Thick	Large O. D., ½-in. Thick
14	2,680	3,570
15	2,500	3,333
16	2,340	3,120
18	2,080	2,770
20	1,870	2,500
22	1,700	2,270
24	1,560	2,080

For pipe sizes up to and including 7 in., standard wrought steel pipe should be used for saturated or superheated steam lines with a working pressure not exceeding 250 lb. per sq. in. and a total temperature not exceeding 700 degrees.

For saturated steam lines with a working pressure of not over 150 lb. per sq. in. the weight of pipe in pounds per foot should be

24.69 for 8 in.,
34.24 for 10 in.,
43.77 for 12 in.,

and O.D. sizes should be from $^5/_{16}$ to $^7/_{16}$ in. thick. For saturated or superheated steam lines with a working pressure from 150 to 250 lb. per sq. in. and a total temperature of not over 700 deg. the weight of pipe in pounds per foot should be,

28.55 for 8 in.,
40.48 for 10 in.,
49.56 for 12 in.,

and O.D. sizes should be from $^3/_8$ to $^7/_{16}$ in. thick.

For saturated or superheated steam lines with a working pressure of not over 350 lb. per sq. in. and a total temperature of not over 700 deg., all pipe, up to and including 12 in., should be extra heavy, and O.D. sizes should be ½-in. thick. For boiler feed lines with a working pressure of from 200 to 400 lb. per sq. in., extra heavy wrought steel pipe should be used up to and including 12 in., and O.D. sizes should be ½ in. thick. If the water is extremely bad, the use of extra heavy drawn brass pipe or extra heavy galvanized wrought steel pipe is recommended.

For boiler feed lines with a working pressure of not over 200 lb. per sq. in. and with favorable water conditions, standard wrought steel pipe should be used for sizes to and including 7 in.; the weight of pipe in pounds per foot should be

28.55 for 8 in.,
40.48 for 10 in.,
49.56 for 12 in.

Extra heavy wrought steel pipe, standard weight galvanized wrought steel pipe or brass pipe should be used when there is considerable corrosion.

Table 24. Standard Iron Pipe Sizes.

Iron Pipe Size, Inches	ACTUAL DIAMETERS, INCHES		APPROXIMATE WEIGHT, POUNDS PER FOOT	
	Outside	Inside	Brass	Copper
⅛	0.405	0.281	0.25	0.26
¼	0.540	0.375	0.43	0.45
⅜	0.675	0.484	0.62	0.65
½	0.840	0.625	0.90	0.95
¾	1.050	0.822	1.25	1.31
1	1.315	1.062	1.70	1.79
1¼	1.660	1.368	2.50	2.63
1½	1.900	1.600	3.00	3.15
2	2.375	2.062	4.00	4.20
2½	2.875	2.500	5.75	6.04
3	3.500	3.062	8.30	8.72
3½	4.000	3.500	10.90	11.45
4	4.500	4.000	12.70	13.33
4½	5.000	4.500	13.90	14.60
5	5.563	5.062	15.75	16.54
6	6.625	6.125	18.31	19.23

For blow-off lines for boilers operating with either superheated or saturated steam, extra heavy wrought steel pipe should be used. (Galvanized extra heavy steel pipe is preferable to black for this service.)

For low pressure water lines, with a working pressure of not over 50 lb. per sq. in., and with favorable water conditions, standard wrought steel pipe should be used for sizes to and including 7 in.; the weight of pipe in pounds per foot should be

28.55 for 8 in.,
40.48 for 10 in.,
49.56 for 12 in.,

and O. D. sizes should be from $^3/_8$ to $^7/_{16}$ in. thick. When the corrosion due

to the water is extremely bad, or the pipe is laid in the ground, cast iron flanged pipe, built to American Water Works Standards, should be used exclusively.

Seamless drawn brass and copper pipe can likewise be obtained in pipe sizes from ⅛ to 6 in., and in the standard and extra heavy weights. The actual inside diameter and the weights per foot of brass and copper pipe, Tables 24 and 25, differ from those of wrought iron.

Table 25. Extra Heavy Iron Pipe Sizes.

Iron Pipe Size, Inches	ACTUAL DIAMETER, INCHES		APPROXIMATE WEIGHT POUNDS PER FOOT	
	Outside	Inside	Brass	Copper
⅛	0.405	0.205	0.370	0.389
¼	0.540	0.294	0.625	0.651
⅜	0.675	0.421	0.830	0.872
½	0.840	0.542	1.200	1.260
¾	1.050	0.736	1.660	1.743
1	1.315	0.951	2.360	2.478
1¼	1.660	1.272	3.300	3.465
1½	1.900	1.494	4.250	4.462
2	2.375	1.933	5.460	5.733
2½	2.875	2.315	8.300	8.715
3	3.500	2.892	11.200	11.760
3½	4.000	3.358	13.700	14.385
4	4.500	3.818	16.500	17.325
4½	5.000	4.250	19.470	20.440
5	5.563	4.813	22.800	23.940
6	6.625	5.750	32.000	33.600

Pipe Fittings

PIPE fittings are made of cast iron, malleable iron, cast steel, brass, or other alloys.

Cast iron fittings are the most common, as they fulfill the usual service requirements. They are made in standard weight, for 125 lb. working steam pressure, and in extra heavy weight, for 250 lb. working steam pressure.

Malleable iron fittings are generally restricted to 2-in. or smaller sizes. In these they are used extensively on saturated steam lines and on boiler feed lines with working pressures of not over 250 lb. per sq. in. Malleable fittings are made in standard weight, for 125 lb. working steam pressure, and in extra heavy weight for 250 lb. working steam pressure.

Cast steel fittings are now generally used on superheated steam lines, especially when the working pressure is over 200 lb. and the total temperature is more than 500 degrees. They are made for superheated steam pressures as high as 350 lb. per sq. in. and for a total temperature of 800 degrees.

Iron pipe-size brass fittings are made in two weights,—a standard weight for working steam pressures up to 125 lb. per sq. in. and an extra heavy weight for working steam pressures up to 250 lb. per sq. in. They are used only when brass piping is installed, which is rarely.

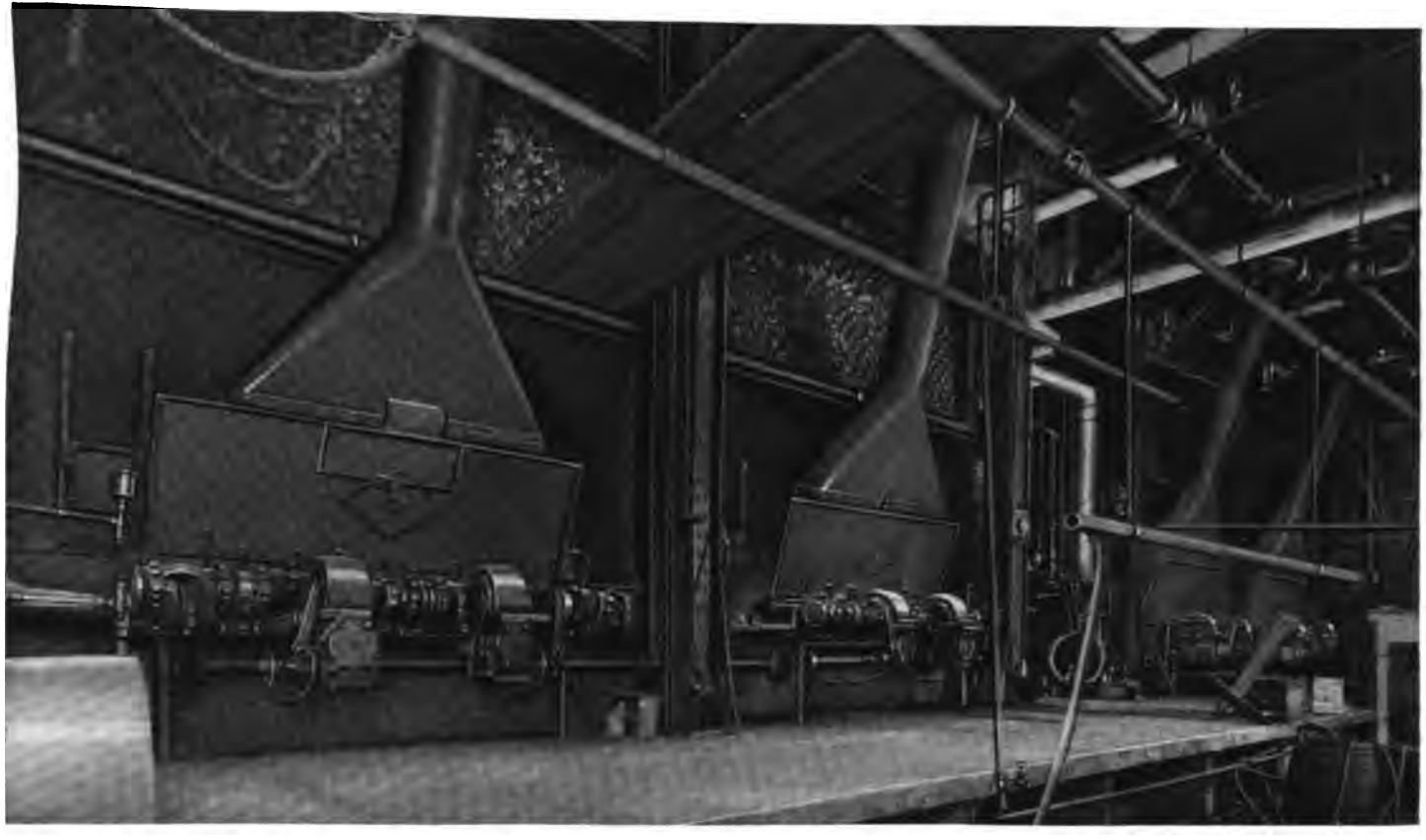

Pillsbury Flour Mills, Minneapolis, Minn. This company has installed 8000 H. P. of Heine Standard Boilers. Boilers shown are set over Sanford Riley Underfeed Stokers.

Pipe fittings are divided into two classes, screwed and flanged. Screwed fittings are used generally in the smaller sizes. The making, and more particularly the breaking, of joints is much easier with flanged than with screwed fittings. No hard and fast rule governs the limits within which each type of fitting should be used. Some authorities specify flanged fittings on all lines 2½ in. or larger, while others state that all fittings 4 in. or larger should be flanged. The present tendency seems to be to use flanged fittings on all lines larger than 3 inches.

Standard weight and extra heavy cast iron flanged fittings are listed in sizes from ¼ to 24 inches. Screwed fittings in the same material are listed in sizes from ⅛ to 12 in., in standard weight; and from ½ to 12 in., in the extra heavy.

Extra heavy cast steel flanged fittings, for 350 lb. pressure, and 800 deg. total temperature, are listed in sizes from 1¼ to 24 inches. Similar screwed fittings are listed in a more limited range, from about 3 to 6 inches.

Iron pipe-size brass flanged fittings are made in a limited range in standard weight (from about 2 to 6 in.), but extra heavy brass flanged fittings can be obtained in any of the extra heavy cast iron patterns. Iron pipe-size brass screwed fittings are listed for 125 lb. pressure in sizes varying from about ⅛ to 4 in., and in cast iron patterns, for steam pressures up to 250 lbs., in sizes varying from ¼ to 6 inches.

Malleable iron screwed fittings for 125 lb. pressure are listed in sizes from ⅛ to about 7 inches. Extra heavy malleable screwed fittings, for 250 lb. pressure, are listed in sizes from ½ to about 6 inches.

Only the thread dimensions of screwed fittings are standardized. Unfortunately the other principal dimensions have not been standardized, as have those for flanges and flanged fittings. Consequently the dimensions of screwed fittings vary widely with the different manufacturers.

The *American Standard* dimensions of flanges and flanged fittings are accepted and used by nearly all manufacturers. The complete standard includes sizes up to 100 in. diameter. The standards most used, from 1 to 48 in., are given in Tables 26 to 29, the first two being for 125 lb. and the other two for 250 lb. working pressure. The letters in the tables of fittings refer to the lettered dimensions in Fig. 143.

The following explanatory notes apply to the tables of flanges and flange fittings:

a—Standard and extra heavy reducing elbows carry same dimensions center to face as regular elbows of largest straight size.

b—Standard and extra heavy tees, crosses and laterals, reducing on run only, carry same dimensions face to face as largest straight size.

c—All extra heavy fittings and flanges to have a raised surface $^1/_{16}$ in. high inside of bolt holes for gaskets.

d—Standard weight fittings and flanges to be plain faced.

e—Bolt holes to be ⅛ in. larger in diameter than bolts.

f—Bolt holes to straddle center line.

g—Face to face dimension of reducers, either straight or eccentric, for all pressures, shall be the same face to face as given in table of dimensions.

h—Square head bolts with hexagonal nuts are recommended.

i—For bolts, 1⅝-in. diameter and larger, studs with a nut on each end are satisfactory.

j—Specifications of long radius fittings refer only to elbows made in two center to face dimensions. These are to be known as elbows and long radius elbows, the latter being used only when so specified.

The general methods of *connecting pipe* are by couplings, nut unions, or flange unions. The first two are screwed connections, and the last can be made with a gasket or with metal-to-metal seats.

Couplings are made of cast iron, standard or extra heavy, from about ½ to 3 in.; of malleable iron, in standard weight from ⅛ to 6 in.; of brass, in standard weight, from ⅛ to 4 in.; and in extra heavy weight, from ¼ to 6 inches. They can be obtained in all three materials; threaded right-hand, or right and left. Couplings should be used only for the smaller sizes of pipe.

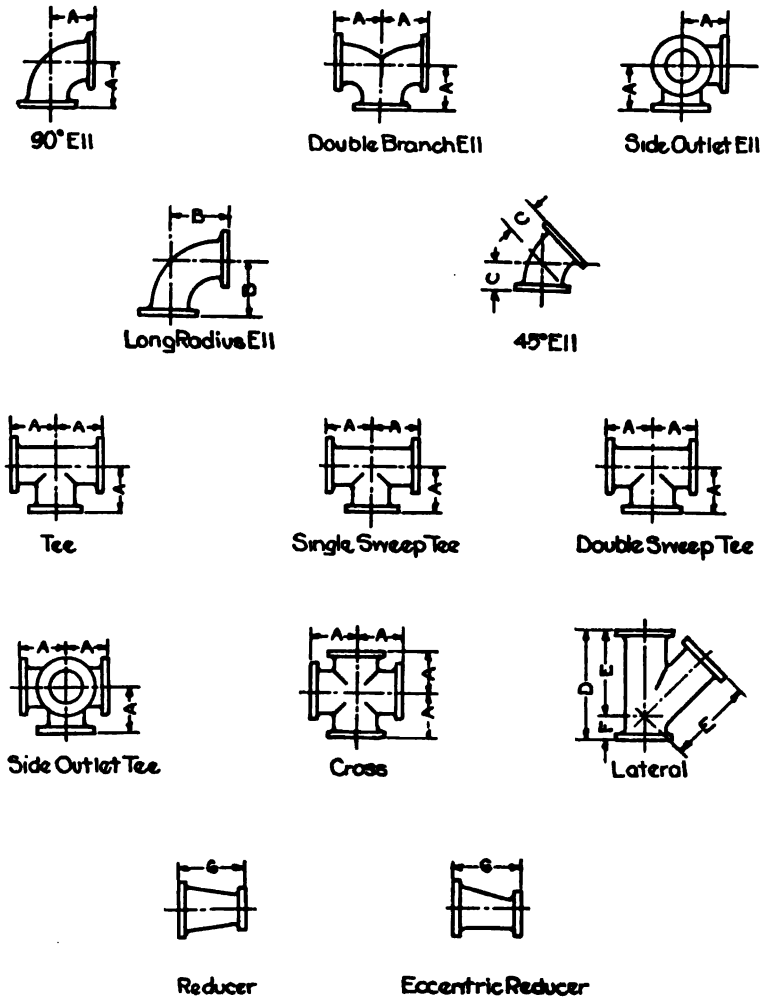

Fig. 143. Standard Types of Flanged Fittings. Dimensions in Tables 26 and 28.

Table 26. American Standard Dimensions for Flanged Fittings for 125 Pounds Working Pressure. (See Fig. 143.)

SIZE	Face to Face A-A	Center to Face A	Center to Face of Long Radius Ells B	Center to Face of 45-deg. Ells C	Face to Face, Laterals D	Center to Face, Laterals E	Center to Face, Laterals F	Face to Face, Reducer G	Diameter of Flange	Thickness of Flange	Diameter of Bolt Circle	No. of Bolts	Diameter of Bolts	Minimum Metal, Thickness of Body
1	7	3½	5	1¾	7½	5¾	1¾	....	4	7/16	3	4	7/16	7/16
1¼	7½	3¾	5½	2	8	6¼	1¾	....	4½	½	3⅜	4	7/16	7/16
1½	8	4	6	2¼	9	7	2	....	5	9/16	3⅞	4	½	7/16
2	9	4½	6½	2½	10½	8	2½	....	6	⅝	4¾	4	⅝	7/16
2½	10	5	7	3	12	9½	2½	....	7	11/16	5½	4	⅝	7/16
3	11	5½	7¾	3	13	10	3	6	7½	¾	6	4	⅝	7/16
3½	12	6	8½	3½	14½	11½	3	6½	8½	13/16	7	4	⅝	7/16
4	13	6½	9	4	15	12	3	7	9	15/16	7½	8	⅝	½
4½	14	7	9½	4	15½	12½	3	7½	9¼	15/16	7¾	8	¾	½
5	15	7½	10¼	4½	17	13½	3½	8	10	15/16	8½	8	¾	½
6	16	8	11½	5	18	14½	3½	9	11	1	9½	8	¾	9/16
7	17	8½	12¾	5½	20½	16½	4	10	12½	1 1/16	10¾	8	¾	⅝
8	18	9	14	5½	22	17½	4½	11	13½	1⅛	11¾	8	¾	⅝
9	20	10	15¼	6	24	19½	4½	11½	15	1⅛	13¼	12	¾	11/16
10	22	11	16½	6½	25½	20½	5	12	16	1 3/16	14¼	12	⅞	¾
12	24	12	19	7½	30	24½	5½	14	19	1¼	17	12	⅞	13/16
14	28	14	21½	7½	33	27	6	16	21	1⅜	18¾	12	1	⅞
15	29	14½	22¾	8	34½	28½	6	17	22¼	1⅜	20	16	1	⅞
16	30	15	24	8	36½	30	6½	18	23½	1 7/16	21¼	16	1	1
18	33	16½	26½	8½	39	32	7	19	25	1 9/16	22¾	16	1⅛	1 1/16
20	36	18	29	9½	43	35	8	20	27½	1 11/16	25	20	1⅛	1⅛
22	40	20	31½	10	46	37½	8½	22	29½	1 13/16	27¼	20	1¼	1 3/16
24	44	22	34	11	49½	40½	9	24	32	1⅞	29½	20	1¼	1¼
26	46	23	36½	13	53	44	9	26	34¼	2	31¾	24	1¼	1 5/16
28	48	24	39	14	56	46½	9½	28	36½	2 1/16	34	28	1¼	1⅜
30	50	25	41½	15	59	49	10	30	38¾	2⅛	36	28	1⅜	1 7/16
32	52	26	44	16	....	....	....	32	41¾	2¼	38½	28	1½	1½
34	54	27	46½	17	....	....	....	34	43¾	2 1/16	40½	32	1½	1 9/16
36	56	28	49	18	....	....	....	36	46	2⅜	42¾	32	1½	1⅝
38	58	29	51½	19	....	....	....	38	48¾	2⅜	45¼	32	1⅝	1 11/16
40	60	30	54	20	....	....	....	40	50¾	2½	47¼	36	1⅝	1¾
42	62	31	56½	21	....	....	....	42	53	2⅝	49½	36	1⅝	1 13/16
44	64	32	59	22	....	....	....	44	55¼	2⅝	51¾	40	1⅝	1⅞
46	66	33	61½	23	....	....	....	46	57¼	2 11/16	53¾	40	1⅝	1 15/16
48	68	34	64	24	....	....	....	48	59½	2¾	56	44	1⅝	2

Nut unions are made with malleable iron, steel or brass bodies, with gaskets or with brass or bronze seats. The commercial size range is from ⅛ to 4 in., but they are not used in sizes larger than 2 inches. Nut unions are not intended primarily for high pressure work; for low or medium pressures however the connection is satisfactory and easily broken. Their use permits desirable piping layouts and connections that would otherwise be impracticable. Unions with brass or bronze seats are usually preferable to the all-iron gasket type.

White Oak Cotton Mills of the Proximity Mfg. Co., Greensboro, N. C., containing 6300 H. P. of Heine Standard Boilers. This company operates 9050 H. P. of Heine Boilers.

Table 27. American Standard Dimensions for Pipe Flanges for 125 Pounds Working Pressure

Diameter of Pipe, Inches	Diameter of Flange, Inches	Thickness of Flange, Inches	Width of Flange Face, Inches	Diameter of Bolt Circle, Inches	No. of Bolts	Diameter of Bolts, Inches	Diameter of Bolt Holes, Inches
1	4	7/16	1½	3	4	7/16	9/16
1¼	4½	½	1⅝	3⅜	4	7/16	9/16
1½	5	9/16	1¾	3⅞	4	½	⅝
2	6	⅝	2	4¾	4	⅝	¾
2½	7	11/16	2¼	5½	4	⅝	¾
3	7½	¾	2¼	6	4	⅝	¾
3½	8½	13/16	2½	7	4	⅝	¾
4	9	15/16	2½	7½	8	⅝	¾
4½	9¼	15/16	2⅜	7¾	8	¾	⅞
5	10	15/16	2½	8½	8	¾	⅞
6	11	1	2½	9½	8	¾	⅞
7	12½	1 1/16	2¾	10¾	8	¾	⅞
8	13½	1⅛	2¾	11¾	8	¾	⅞
9	15	1⅛	3	13¼	12	¾	⅞
10	16	1 3/16	3	14¼	12	⅞	1
12	19	1¼	3½	17	12	⅞	1
14	21	1⅜	3½	18¾	12	1	1⅛
15	22¼	1⅜	3⅝	20	16	1	1⅛
16	23½	1 7/16	3¾	21¼	16	1	1⅛
18	25	1 9/16	3½	22¾	16	1⅛	1¼
20	27½	1 11/16	3¾	25	20	1⅛	1¼
22	29½	1 13/16	3¾	27¼	20	1¼	1⅜
24	32	1⅞	4	29½	20	1¼	1⅜
26	34¼	2	4⅛	31¾	24	1¼	1⅜
28	36½	2 1/16	4¼	34	28	1¼	1⅜
30	38¾	2⅛	4⅜	36	28	1⅜	1½
32	41¾	2¼	4⅞	38½	28	1½	1⅝
34	43¾	2 5/16	4⅞	40½	32	1½	1⅝
36	46	2⅜	5	42¾	32	1½	1⅝
38	48¾	2⅜	5⅜	45¼	32	1⅝	1¾
40	50¾	2½	5⅜	47¼	36	1⅝	1¾
42	53	2⅝	5½	49½	36	1⅝	1¾
44	55¼	2⅝	5⅝	51¾	40	1⅝	1¾
46	57¼	2 11/16	5⅝	53¾	40	1⅝	1¾
48	59½	2¾	5¾	56	44	1⅝	1¾

Flange unions are of two general types, those with cast or malleable bodies and brass-to-brass or brass-to-iron seats, similar to those of nut unions; and those in which a gasket is used.

The first type is expensive and, although made in sizes from ½ to 12 in., its use in practice is limited to the smaller sizes. It has an advantage for connections that must be often broken and remade.

The second and more common type of flange union is that in which the pipe ends to be connected are secured in or by two metal flanges; a gasket is inserted between the flanges and the flanges are drawn together by bolts. The most satisfactory forms of this type of union are the screwed joint, the peened joint, the lapped or Van Stone joint, and the welded joint. Fig. 144 gives examples of these four joints.

Table 28. American Standard Dimensions for Flanged Fittings for 250 Pounds Working Pressure. (See Fig. 143.)

SIZE	Face to Face A-A	Center to Face A	Center to Face of Long Radius Ells B	Center to Face of 45-deg. Ells C	Face to Face, Laterals D	Center to Face, Laterals E	Center to Face, Laterals F	Face to Face, Reducer G	Diameter of Flange	Thickness of Flange	Diameter of Bolt Circle	No. of Bolts	Diameter of Bolts	Minimum Metal, Thickness of Body
1	8	4	5	2	8½	6½	2	....	4½	11/16	3¼	4	½	½
1¼	8½	4¼	5½	2½	9½	7¼	2¼	....	5	¾	3¾	4	½	½
1½	9	4½	6	2¾	11	8½	2½	....	6	13/16	4½	4	⅝	½
2	10	5	6½	3	11½	9	2½	....	6½	⅞	5	4	⅝	½
2½	11	5½	7	3½	13	10½	2½	....	7½	1	5⅞	4	¾	9/16
3	12	6	7¾	3½	14	11	3	6	8¼	1⅛	6⅝	8	¾	9/16
3½	13	6½	8½	4	15½	12½	3	6½	9	1 3/16	7¼	8	¾	9/16
4	14	7	9	4½	16½	13½	3	7	10	1¼	7⅞	8	¾	⅝
4½	15	7½	9½	4½	18	14½	3½	7½	10½	1 5/16	8½	8	¾	⅝
5	16	8	10¼	5	18½	15	3½	....	11	1⅜	9¼	8	¾	11/16
6	17	8½	11½	5½	21½	17½	4	9	12½	1 7/16	10⅝	12	¾	¾
7	18	9	12¾	6	23½	19	4½	10	14	1½	11⅞	12	⅞	13/16
8	20	10	14	6	25½	20½	5	11	15	1⅝	13	12	⅞	13/16
9	21	10½	15¼	6½	27½	22½	5	11½	16¼	1¾	14	12	1	⅞
10	23	11½	16½	7	29½	24	5½	12	17½	1⅞	15¼	16	1	15/16
12	26	13	19	8	33½	27½	6	14	20½	2	17¾	16	1⅛	1
14	30	15	21½	8½	37½	31	6½	16	23	2⅛	20¼	20	1⅛	1⅛
15	31	15½	22¾	9	39½	33	6½	17	24½	2 3/16	21½	20	1¼	1 3/16
16	33	16½	24	9½	42	34½	7½	18	25½	2¼	22½	20	1¼	1¼
18	36	18	26½	10	45½	37½	8	19	28	2⅜	24¾	24	1¼	1⅜
20	39	19½	29	10½	49	40½	8½	20	30½	2½	27	24	1⅜	1½
22	41	20½	31½	11	53	43½	9½	22	33	2⅝	29¼	24	1½	1 9/16
24	45	22½	34	12	57½	47½	10	24	36	2¾	32	24	1⅝	1⅝
26	48	24	36½	13	....	....	....	26	38¼	2 13/16	34½	28	1⅝	1 13/16
28	52	26	39	14	....	....	....	28	40¾	2 15/16	37	28	1⅝	1⅞
30	55	27½	41½	15	....	....	....	30	43	3	39¼	28	1¾	2
32	58	29	44	16	....	....	....	32	45¼	3⅛	41½	28	1⅞	2⅛
34	61	30½	46½	17	....	....	....	34	47½	3¼	43½	28	1⅞	2¼
36	65	32½	49	18	....	....	....	36	50	3⅜	46	32	1⅞	2⅜
38	68	34	51½	19	....	....	....	38	52¼	3 7/16	48	32	1⅞	2 7/16
40	71	35½	54	20	....	....	....	40	54½	3 9/16	50¼	36	1⅞	2 9/16
42	74	37	56½	21	....	....	....	42	57	3 11/16	52¾	36	1⅞	2 11/16
44	78	39	59	22	....	....	....	44	59¼	3¾	55	36	2	2 13/16
46	81	40½	61½	23	....	....	....	46	61½	3⅞	57¼	40	2	2⅞
48	84	42	64	24	....	....	....	48	65	4	60¾	40	2	3

In the *screwed joint,* the flange is screwed on the pipe until the pipe projects about 1/16 in. beyond the face of the flange. A facing cut is then taken across the face of the flange and the end of the pipe. The face of the flange should then be square with the axis of the pipe and the gasket should bear on the end of the pipe. This joint is accepted for all sizes of pipe in saturated steam lines with working pressures not greater than 125 lb., on boiler feed lines with working pressures up to 150 lb., for blow-off lines, and for low pressure water lines. It is also used on medium and high pressure saturated and superheated steam lines and boiler feed lines in sizes up to about 8 inches.

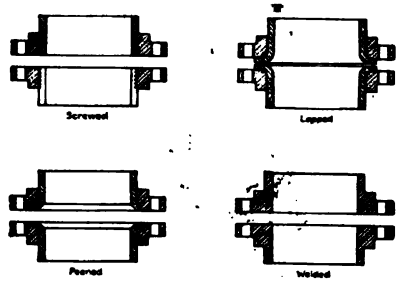

Fig. 144. Typical Flange Joints.

Table 29. American Standard Dimensions for Pipe Flanges for 250 Pounds Working Pressure

Diameter of Pipe, Inches	Diameter of Flange, Inches	Thickness of Flange, Inches	Width of Flange Face, Inches	Diameter of Bolt Circle, Inches	No. of Bolts	Diameter of Bolts, Inches	Diameter of Bolt Holes, Inches
1	4½	11/16	1¾	3¼	4	½	⅝
1¼	5	¾	1⅞	3¾	4	½	⅝
1½	6	13/16	2¼	4½	4	⅝	¾
2	6½	⅞	2¼	5	4	⅝	¾
2½	7½	1	2½	5⅞	4	¾	⅞
3	8¼	1⅛	2⅝	6⅝	8	¾	⅞
3½	9	1 3/16	2¾	7¼	8	¾	⅞
4	10	1¼	3	7⅞	8	¾	⅞
4½	10½	1 5/16	3	8½	8	¾	⅞
5	11	1⅜	3	9¼	8	¾	⅞
6	12½	1 7/16	3¼	10⅝	12	¾	⅞
7	14	1½	3½	11⅞	12	⅞	1
8	15	1⅝	3½	13	12	⅞	1
9	16¼	1¾	3⅝	14	12	1	1⅛
10	17½	1⅞	3¾	15¼	16	1	1⅛
12	20½	2	4¼	17¾	16	1⅛	1¼
14	23	2⅛	4½	20¼	20	1⅛	1¼
15	24½	2 3/16	4¾	21½	20	1¼	1⅜
16	25½	2¼	4¾	22½	20	1¼	1⅜
18	28	2⅜	5	24¾	24	1¼	1⅜
20	30½	2½	5¼	27	24	1⅜	1½
22	33	2⅝	5¼	29¼	24	1½	1⅝
24	36	2¾	5¾	32	24	1⅝	1¾
26	38¼	2 13/16	6⅛	34½	28	1⅝	1¾
28	40¾	2 15/16	6⅜	37	28	1⅝	1¾
30	43	3	6½	39¼	28	1¾	1⅞
32	45¼	3⅛	6⅝	41½	28	1⅞	2
34	47½	3¼	6¾	43½	28	1⅞	2
36	50	3⅜	7	46	32	1⅞	2
38	52¼	3 7/16	7⅛	48	32	1⅞	2
40	54½	3 9/16	7¼	50¼	36	1⅞	2
42	57	3 11/16	7½	52¾	36	1⅞	2
44	59¼	3¾	7⅝	55	36	2	2⅛
46	61½	3⅞	7¾	57¼	40	2	2⅛
48	65	4	8½	60¾	40	2	2⅛

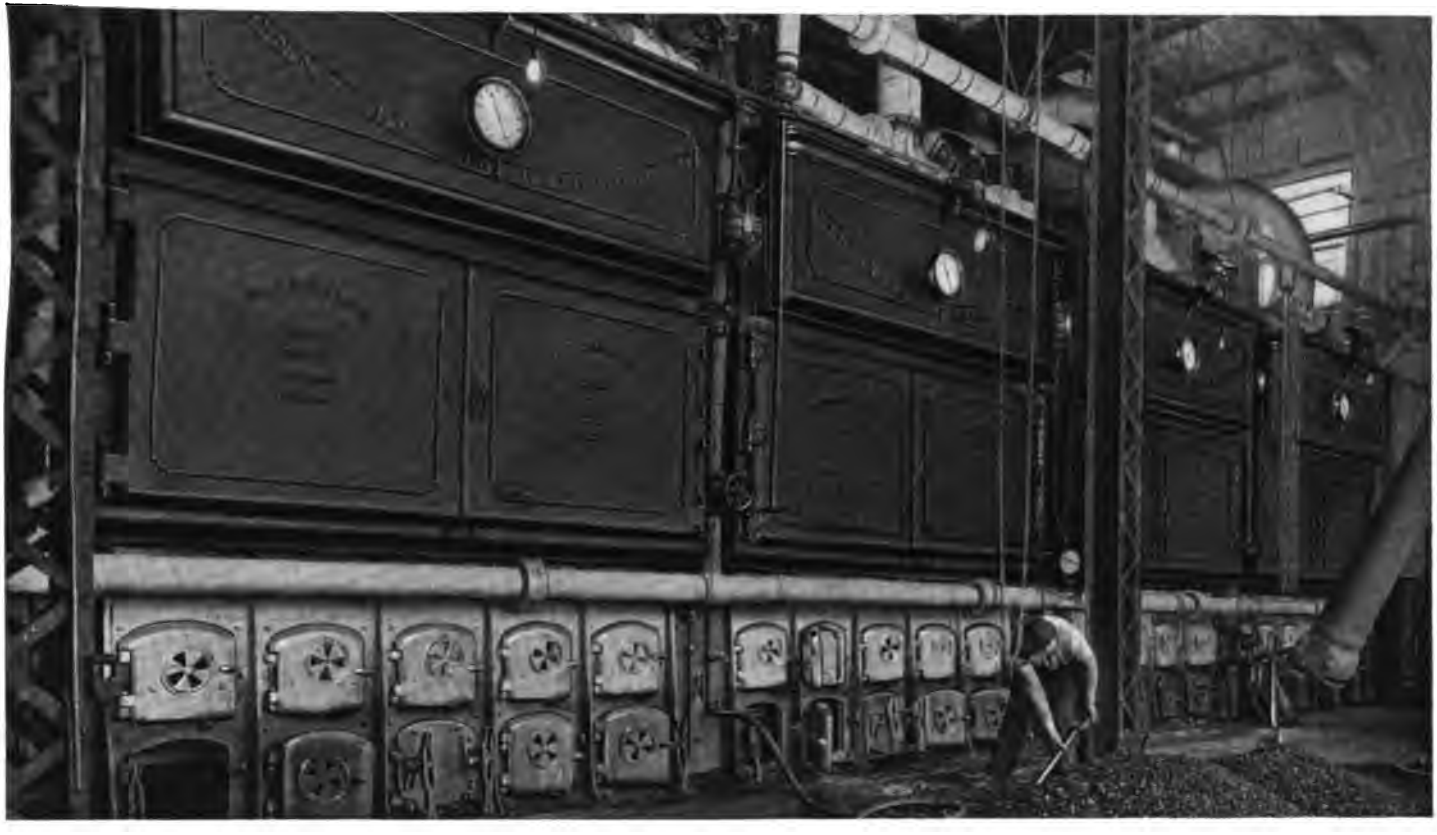

2000 H. P. installation of Heine Standard Boilers in the Broad Street Station of the Pennsylvania Railroad, Philadelphia, Pa. This company operates 10,000 H. P. of Heine Boilers.

The *peened joint* is formed by shrinking a flange onto the end of the pipe, which is peened or expanded into a recess in the face of the flange. A light facing cut is then taken across the face of the flange and the end of the pipe. This joint is better than the simple screwed flange, especially for sizes larger than 6 in., but cannot be made up well at the place of erection.

The *lapped or Van Stone joint,* one of the most flexible in use, is made by upsetting and flattening the heated end of the pipe so as to form a flare or lap. The flared end is faced to insure uniform thickness and a tight joint. The lapped portion of the pipe is also finished on the edge. The flanges are loose on the pipe, their hubs being bored slightly larger than the outside diameter of the pipe, and simply serve to draw the lapped ends of the pipe against a gasket. In some forms, the lapped part of the pipe is not of uniform thickness but tapers toward the edge; the face of the flange inside the bolt holes are then faced to the angle of inclination of the back side of the lapped part of the pipe. The lapped joint is recommended for practically all kinds of service. It is especially valuable on high pressure superheated steam lines and high pressure boiler-feed lines.

The *welded joint* is made by welding a flange on the end of the pipe. Theoretically this is the nearest perfect of all joints, because a welded flange becomes a part of the pipe itself. Its success depends upon the care with which the weld is made. In practice the welded joint is reliable and satisfactory and is considered to be the best for high pressures and high degrees of superheat.

There is little choice between a well-made lapped joint and a well-made welded joint. Both are more expensive than the simpler types, but in high pressure work their cost is more than justified.

Flange materials. Cast iron, malleable iron, cast steel, wrought steel and brass are used for flanges. Cast iron flanges are extensively used on saturated steam lines, boiler feed lines, and low pressure water lines.

Malleable iron flanges are not as common as cast iron flanges, but are applicable to the same service.

Cast steel and wrought steel flanges are recommended for high pressure saturated and superheated steam lines, high pressure boiler feed lines, and blow-off lines.

Brass flanges are used only with brass pipe and almost exclusively in the screwed type of joint.

The following figures, due to the *Crane Company,* show the ultimate strength of pipe flange metals:

Material	Ultimate strength, lb. per sq. in.
Cast iron, ordinary grade	14,000
Gray cast iron, high grade	22,500
Malleable iron	37,000
Forged steel	51,000
Cast steel	67,000

Valves

VALVES control to a great extent the safety of a plant. Their location determines the flexibility of the piping system, either in normal operation or in times of emergency.

Safety valves for boilers generally must comply with the specifications of local or national codes. The A. S. M. E. Boiler Code requires that they shall be of the direct spring-loaded pop type, with seat and bearing surface of the disk either inclined at an angle of about 45 deg., or flat at an angle of about 90 deg. to the center of the spindle.

The safety valve charts, Figs. 145 and 146, may be used for determining the proper number and sizes of safety valves required. The charts are made up so that it is necessary to take only the rated horsepower of the boiler and run up the vertical line to the slanting line corresponding to the relieving pressure desired, and the proper size and number of safety valves are indicated at the left of the zone in which the vertical horsepower rating line crosses the relieving pressure line. If the intersection comes on a zone division line, the smaller valves are to be used.

Example. One 806 H.P. boiler to operate at 190 pounds gage pressure. The two-valve chart stops below 806 H.P. Therefore, we must go to the three-valve chart. We find that the 806 H.P. vertical line does not intersect the 190 lb. pressure line. This indicates that more than three valves are necessary. We then take one-half the rated horsepower, and find that two 4 in. safety valves will relieve 403 H.P. The proper valve specification in this case is therefore four 4 in. safety valves.

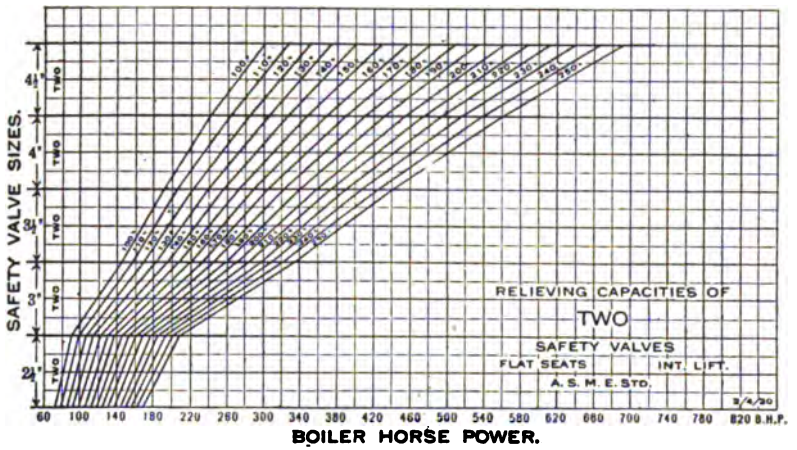

Fig. 145. Relieving Capacities of Two Ashton Safety Valves.

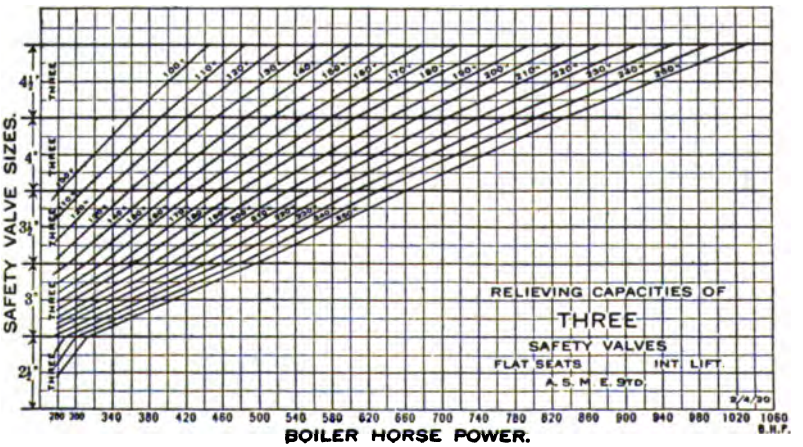

Fig. 146. Relieving Capacities of Three Ashton Safety Valves.

Safety valves are also discussed in Chapter 16 on OPERATION.

Globe valves, probably the most common type of stop valve, can be used simply as a stop valve, or also to partly throttle the flow of a fluid. These valves should be installed so as to close against the pressure, because if the pressure acts above the disk and the latter becomes detached from the stem, they cannot be opened. A further advantage in closing globe valves against the pressure is the ease of packing the spindle stuffing box when the valve is closed. These valves should not be placed in a horizontal return line, especially with the stem vertical, because the condensate must fill the pipe about half full before it can flow through. The globe valve should be designed so that it can be packed under full line pressure and so that the disk or the seat can be quickly repaired.

Valves with outside screws are preferable to those with inside screws, unless the screw must be protected because of the valve location. The outside screw type indicates more quickly whether it is open or closed. This is especially true of the type having a rising stem or spindle and a stationary wheel.

Globe valves are made in both screwed and flanged types, with brass, iron or steel bodies and with composition, babbitt, bronze, nickel and nickel alloy disks and seat rings.

Standard pattern screwed brass globe valves, rated for about 150 lb. working steam pressure or 250 lb. working water pressure, are made in sizes from ⅛ to 3 inches. Extra heavy screwed brass valves, rated for about 300 lb. working steam pressure, or about 500 lb. working water pressure, are made in sizes from ¼ to 3 inches. Flanged standard brass valve sizes range from ¼ to 3 inches. Extra heavy flanged brass valves are made in sizes from ½ to 3 inches. Brass globe valves are not commonly more than 2 in. diameter. Their use is limited to saturated steam lines, boiler feed lines and water lines of medium or low pressure.

Standard pattern iron-body screwed globe valves, rated for about 150 lb. steam or 250 lb. water pressure, are made in sizes from 2 to 12 in., and the same type flange is made in sizes from 2 to 24 inches. Extra heavy iron-body globe valves, rated for about 250 lb. steam or 400 lb. water pressure, are made in either screwed or flanged types, and in sizes from 2 to 12 inches. Iron-body valves with disks, seat rings and spindles of other materials, are satisfactory for saturated steam lines, boiler feed lines and water lines with pressures up to their ratings, but are not so good as steel valves for pressures over 150 pounds. Valves 6 in. and larger should be equipped with by-passes, especially for the higher pressures.

Steel valves should be used in superheated steam lines and high pressure feed lines. These are made in sizes from 2 to 12 in., in the extra heavy weight, and are rated for 350 lb. working steam pressure.

Disks for globe valves are made of a wide variety of materials. Composition disks are made in several grades; soft for low pressure water, rubber for cold water up to 250 lb. pressure, semi-hard for hot water and boiler feed lines, hard for steam lines up to 150 lb. pressure. Babbitt metal disks are often used in low pressure hot water and steam lines. Brass or bronze disks are used in high pressure saturated steam lines and feed lines, the harder grades for the higher pressures. Nickel and alloys high in nickel are recommended for the highest pressures and for superheated steam. Valve seats, or at least seat rings, should be made of non-corrosive metal of characteristics similar to those required of metallic disks.

Gate valves offer a minimum resistance to the flow of a fluid, but when throttled are hard to regulate and are likely to chatter. They are made of the same materials as globe valves and are applicable to the same types of service, except for throttling. For high class installations, particularly in the larger sizes, gate valves represent the best standard practice. By-passes should be used with high pressure gate valves of 6-in. or larger diameter.

A stop valve should not be placed in a vertical steam line, unless it is possible to drain the condensate that collects above the valve seat when the valve is closed.

Automatic non-return valves should be installed on each boiler when the plant contains more than one. These valves automatically equalize the pressures of the different boilers, thereby tending to equalize the loads. They can be used to cut in or cut out boilers automatically, will automatically cut a boiler off the line in case of an internal rupture, and will prevent steam being accidentally turned into a cold boiler.

These automatic valves are made in many forms, all essentially check valves, although they may be stop valves as well. The control can be remote non-automatic, as well as hand and automatic, so that their automatic action can be tested at any time.

The non-return valve should be carefully made and should be extremely rugged, because it is subjected to great stresses. It is usually attached directly to the boiler nozzle, so that the boiler must be shut down if the valve has to be repaired. Besides the non-return valve, a gate valve should be placed between each boiler and the header or main, beyond the non-return valve.

Check valves. Among these, the ball check is uncommon. The weighted check is more popular, as it can be used as a combination relief valve and check. The disk check has much the same body as a globe valve and offers about the same resistance to flow. The swing check, by far the most common, is simple, effective and offers the least resistance to flow.

A check valve is subject to severe service and must be so designed that its disk and seat can be repaired. In essential lines, such as boiler feed lines, a check valve should be protected by a stop valve on each side, so that a defective disk can be repaired without taking the pressure off the line. For feed lines to boilers in continuous operation, or when regulating valves are subjected to severe usage, both the check valve and the regulating valve should be protected by a stop valve on each side of the two; the stop valves are normally wide open and are closed only when either the check or the regulating valve must be repaired.

Combination stop and check valves are used frequently in boiler feed lines and can be combined with regulating valves to reduce the number of valves required to obtain a fair protection.

In *blow-off connections*, three types of valve are commonly used; a specially designed blow-off valve, a blow-off cock, and a gate valve. In the best practice a special blow-off valve and either a cock or a gate valve are installed in each blow-off connection between the boiler and the blow-off main, the cock or gate valve being located next to the boiler. The cock or gate valves should be opened first and closed last, when blowing down, so as to reduce the wear on them, and so that they can be depended upon to hold pressure when the regular blow-off valve is being repaired. Plug cocks are satisfactory for this service, especially on boilers operated at low or medium pressures, but a gate valve is better and can more easily be used as a wash-out valve. Plug cocks should be equipped with a spring or other compensating device, to automatically take up wear. Steel or iron blow-off valves, gate valves and cocks should be extra heavy, steel being preferable for the higher pressures and temperatures. Valve disks and seats should be so arranged that they can be repaired. Blow-off service is severe and is particularly harsh when scale and sediment is present in quantity.

The manufacturers have proposed that blow-off valves for power boilers operating with pressures up to 250 lb. be made only in the extra heavy pattern and in the 1, 1½, 2 and 2½-in. sizes; the 1-in. size to be screwed, the 1½ and 2-in. sizes screwed or flanged, and the 2½-in. size flanged.

Blow-Off Piping. Each boiler should have its own blow-off pipe. This should end in the boiler room, or where discharge on account of a leaky valve will be sure to attract attention. In most cities hot water is not permitted to be discharged into the sewer. A blow-off tank is then placed at a sufficient height that it will drain by gravity into the sewer. This tank should be provided with a man-hole, an open vent pipe, and with inlet and outlet pipes connected with the blow-off pipe and the sewer respectively. A valve should be placed in the outlet pipe.

In horizontal return tubular boilers, the blow-off pipe should be covered with magnesia, asbestos or fire brick where it passes through the back connection. It can be protected by a connection from it to the boiler just below the water line. In this way, water is continually circulated, and the blow-off pipe will not burn. A valve should be placed in this connection, and closed before the blow-off cock is opened.

Reference should also be made to Chapter 16 on OPERATION.

Size of Steam Pipes

ASIDE from the attraction of gravity, a fluid flows through a pipe only because the pressure at one end is greater than that at the other. The higher the velocity desired, the greater must be the difference between initial and final pressures.

The problem of selecting a pipe to conduct a given quantity of steam or water in a given time therefore resolves itself into striking a balance between high velocity, which requires a high pressure drop but permits the use of a small pipe; and low velocity, which requires a large pipe but can be obtained with a small drop in pressure.

The drop in pressure caused by friction does not represent an equivalent loss of energy, because the energy reappears as heat. If the steam entering the pipe line is wet, this heat tends to evaporate the moisture in the steam. If steam is dry when it enters the line, the heat tends to superheat it, or if it entered as superheated steam, to add to its superheat. The equipment to which the steam is delivered and in which it is used determines whether this heat, gained at the expense of a drop in pressure, is utilized or wasted. If it is utilized, the net loss due to friction is negligible; if not, the pressure consumed in overcoming friction becomes a loss.

The use of a high velocity reduces the size of steam mains and thereby directly reduces the loss by radiation and the cost of the equipment. Steam velocities of from 3500 to 6000 ft. per min. have been common in the past, but in present practice velocities are from 12,000 to 20,000 ft. per min. This increase has occurred partly because superheated steam is being more commonly used and also because prime movers utilize the superheat from pipe friction to reduce their steam consumption. Pipe friction represents an absolute loss if the steam consumption of an engine, pump or other apparatus, instead of being reduced because of the superheat, is increased because of the lower pressure.

It has been determined analytically and experimentally that the pressure loss due to the steady flow of a fluid through a pipe of uniform diameter varies with the density of the fluid, is proportional to the length of the pipe, decreases as the diameter of the pipe increases, increases with the roughness of the interior surface, and increases nearly as the square of the velocity.

The old method of basing steam pipe sizes on the velocity of the steam, has given place to the more correct method of determining the pipe diameter in accordance with the drop of pressure allowable. It is almost immaterial what the velocity may be so long as this pressure drop condition is met.

The formula generally used is:

$$P = 0.000131 \times \frac{W^2 h \left(1 + \frac{3.6}{d}\right)}{w\ d^5}, \text{ from which}$$

$$W = 87 \sqrt{\frac{w\ P\ d^5}{h\left(1 + \frac{3.6}{d}\right)}} \qquad (18)$$

P = Drop in pressure, lb. per sq. in.
W = Weight of steam flowing, lb. per min.
h = Length of pipe, feet
d = Internal diameter of pipe, inches
w = Mean density of steam, lb. per cu. ft.

This formula, as simplified by *Spitzglas* (Armour Engineer, 1917), is:

$$W = k \sqrt{\frac{P\ w}{h}} \qquad (19)$$

where:

W = Weight of steam in pounds per second
P = Pressure drop in pounds
w = Mean density of steam
h = Length of pipe in feet.
k = 1100 for 16 in. pipe
800 for 14 in. pipe
550 for 12 in. pipe
350 for 10 in. pipe
195 for 8 in. pipe
97 for 6 in. pipe
60 for 5 in. pipe
32.5 for 4 in. pipe
15.5 for 3 in. pipe
8.5 for 2½ in. pipe
5.1 for 2 in. pipe
2.5 for 1½ in. pipe
0.75 for 1 in. pipe

Gebhardt says that this formula (19) gives results which accord closely with observation, and as it is more convenient to use than (18) it is to be preferred. To facilitate the determination of steam pipe sizes, the following charts: Figs. 147, 148, 149, 150 and 151, have been prepared in accordance with the above values of k as determined by *Spitzglas*. Particular care has been taken to make them very easy to use. The following instructions will make this quite clear:

Saturated Steam.

1. Enter the lower left-hand scale with the weight of steam to be carried in pounds per hour.
2. Proceed vertically to the proper curve of pressure, which is the initial pressure at the entrance of the pipe.
3. From this intersection, proceed horizontally to the right to the curve of pressure drop per 100 feet.
4. Proceed vertically downwards from this intersection to the lower right-hand scale and read the size of pipe required.

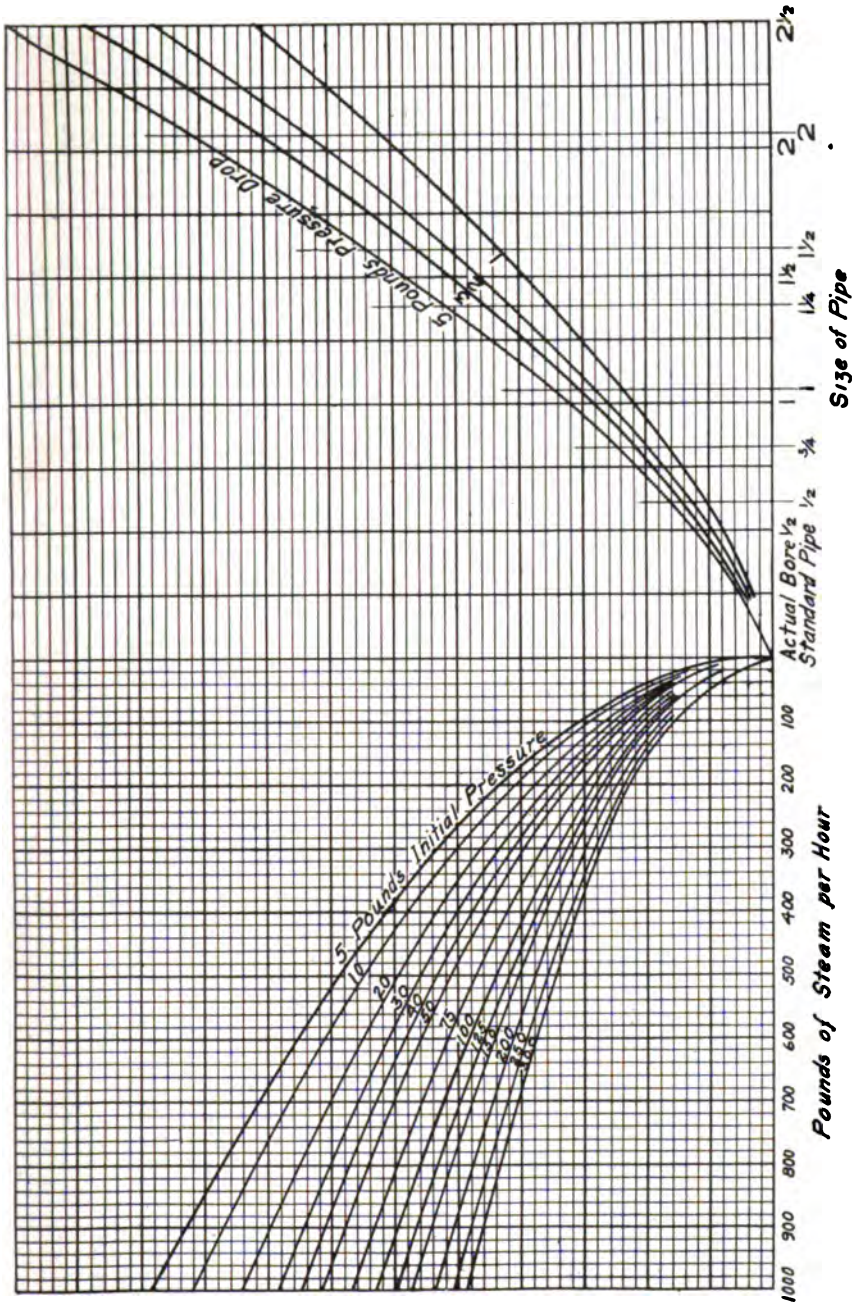

Fig. 147. Sizes of Pipe for 0 to 1000 Pounds of Steam per Hour.

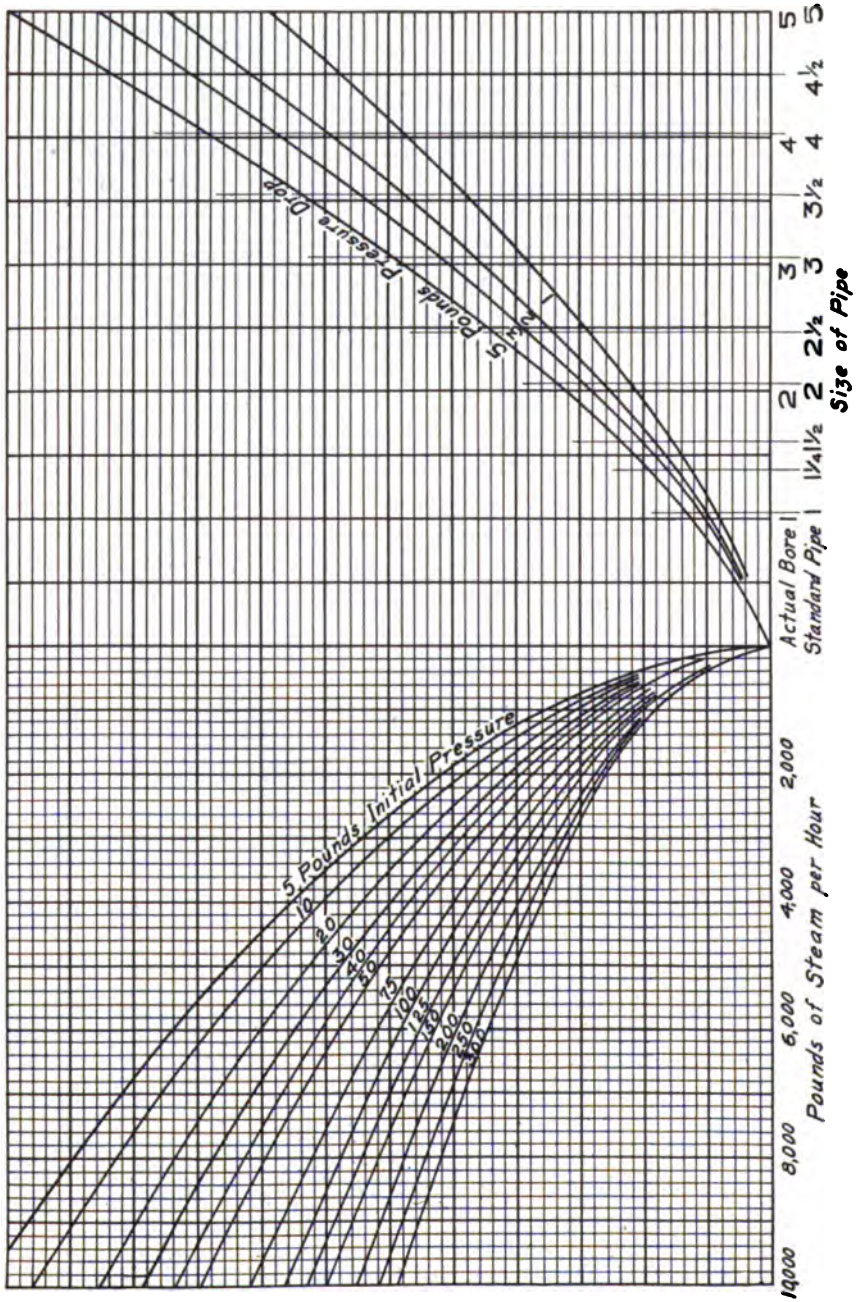

Fig. 148. Sizes of Pipe for 1000 to 10,000 Pounds of Steam per Hour.

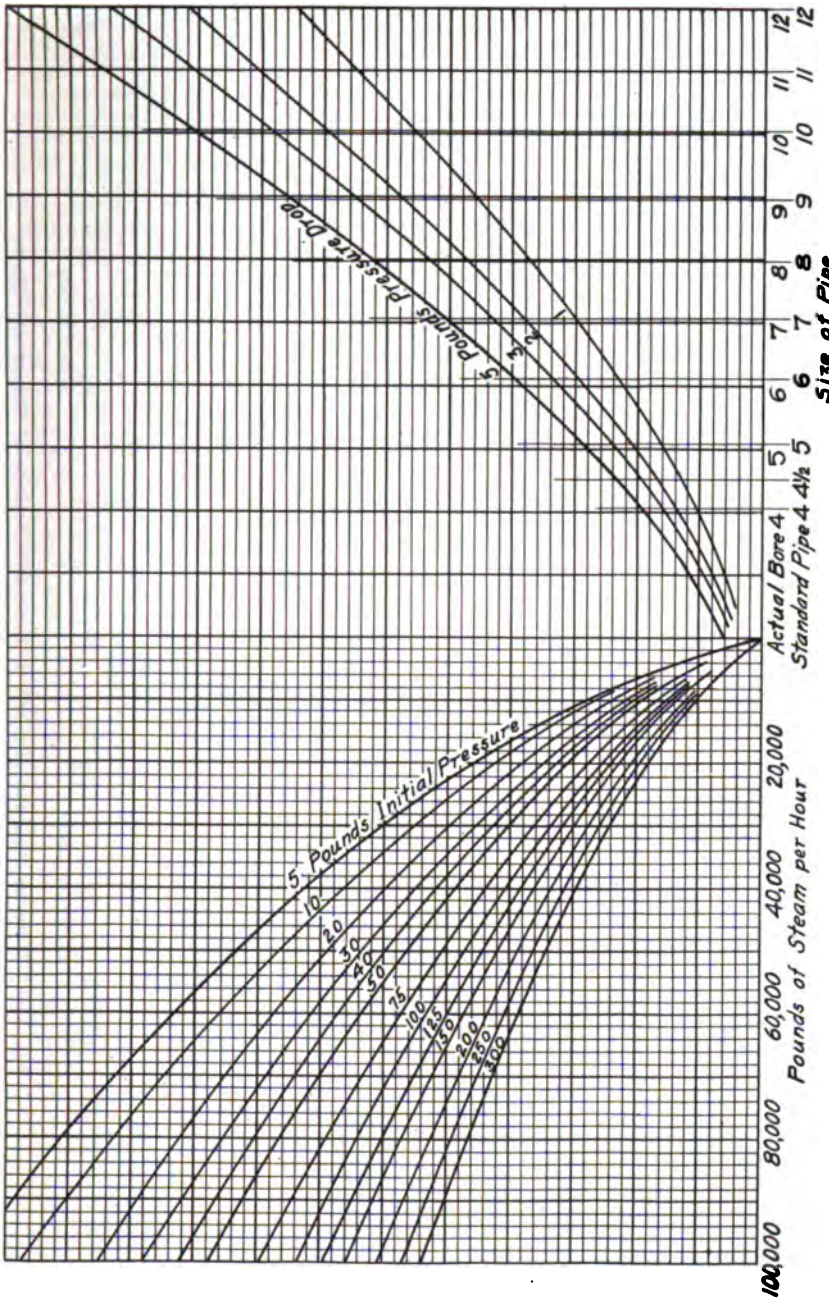

Fig. 149. Sizes of Pipe for 10,000 to 100,000 Pounds of Steam per Hour.

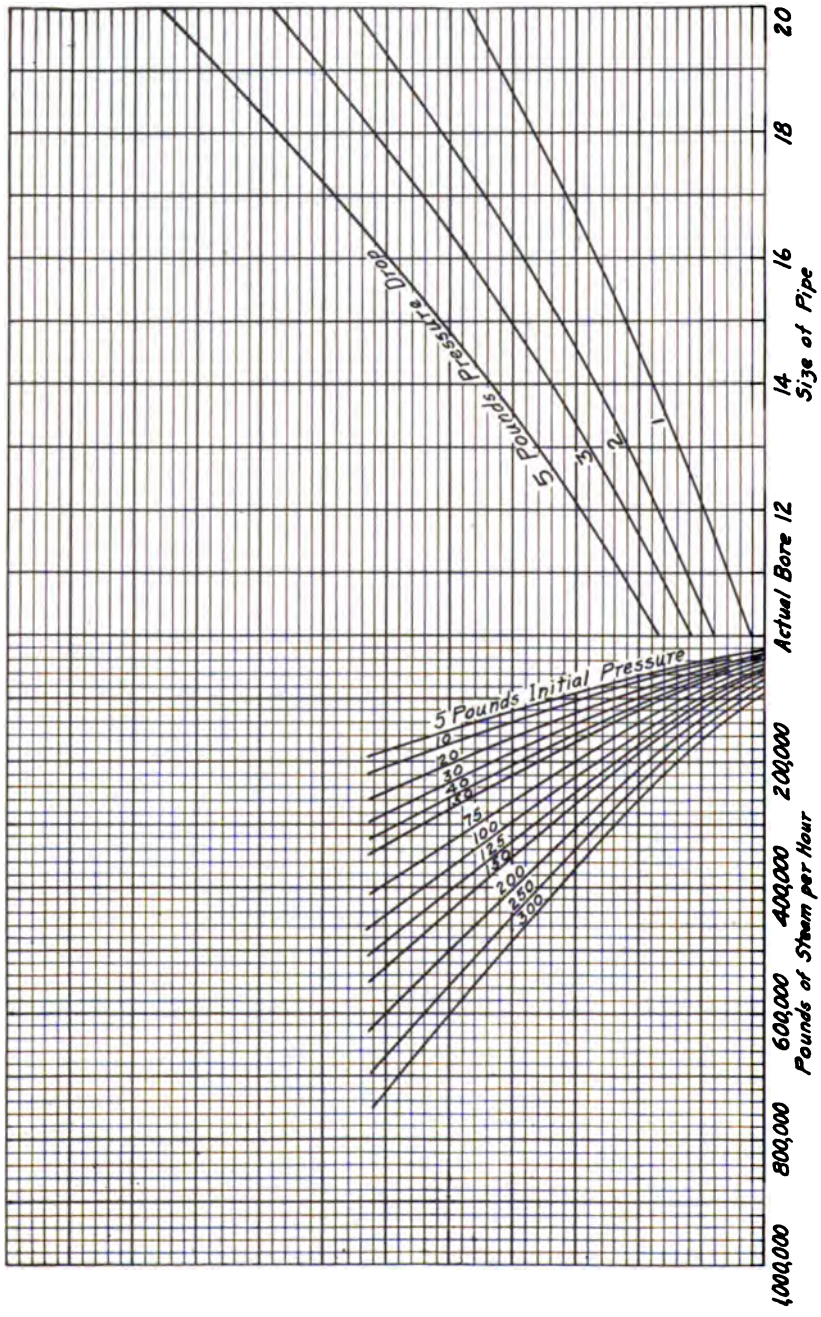

Fig. 150. Sizes of Pipe for 100,000 to 1,000,000 Pounds of Steam per Hour.

Superheated Steam.

Enter the lower scale of Fig. 151 with the pressure at the pipe entrance, and proceed vertically upwards to the proper curve of the temperature of the saturated steam (*not degrees of superheat*). Proceed from this intersection horizontally to the right, and read the pressure found on the right-hand scale. Now proceed as directed above for saturated steam, using as initial pressure the pressure just found from Fig. 151.

The reason of this procedure is that the steam flow depends upon the average density of the steam, and Fig. 151 simply finds a pressure at which saturated steam has the same density as that of the superheated steam in question.

To find the weight of steam per hour, divide the *equivalent evaporation* per hour by the factor of evaporation. Or multiply the B.H.P. by 34.5 and divide by the factor of evaporation.

The pressure drop is for 100 feet of pipe, and the drop for any other length is in direct proportion.

The drop of pressure per hundred feet varies in old installations from half a pound to five pounds. Modern practice allows two to four pounds pressure drop per hundred feet. The final result is governed in each instance by the smallness of pressure drop desired, modified by the cost of the pipe required to attain it.

Formulas for the length of pipe with resistance equivalent to that offered by valves and fittings, give results that vary widely and are of little practical assistance. It is therefore customary to assume the following values for resistance:

Obstruction	Pipe Diameters
Entrance of pipe	60
90 deg. elbow	40
Globe valve	60

The resistance of long radius bends is assumed to be equal to the same length of straight pipe. The resistance of gate valves is considered negligible.

In the steam flow formulas, the figure for density should represent the mean density of the steam in the pipe. The point of mean density may or may not coincide with the middle section of a given pipe, for if the fittings are numerous at or near one end and few at the other, the pressure drop and consequently the density will vary accordingly. For exact calculations, and for well insulated pipes, the change in density due to superheat by friction should be considered.

Size of Water Pipes

FORMULAS for the *flow of water* in pipes are based upon the fundamental hydraulic equation used in deriving the steam flow formulas, although the coefficient of friction is different. *Gebhardt* gives the following formula, credited to *Cox*, for the loss of head due to friction in water pipes:

$$H = \frac{(4\,v^2 + 5\,v - 2)\,h}{1200\,d} \qquad (20)$$

H = Friction head, feet
v = Velocity, ft. per sec.
h = Length of pipe, feet
d = Diameter of pipe, inches

This formula applies only to the flow of water through clean straight cylindrical pipes of uniform diameter. The friction head caused by bends, valves, fittings or obstructions must be added to the friction head of the pipe, in order to determine the total head required to overcome friction.

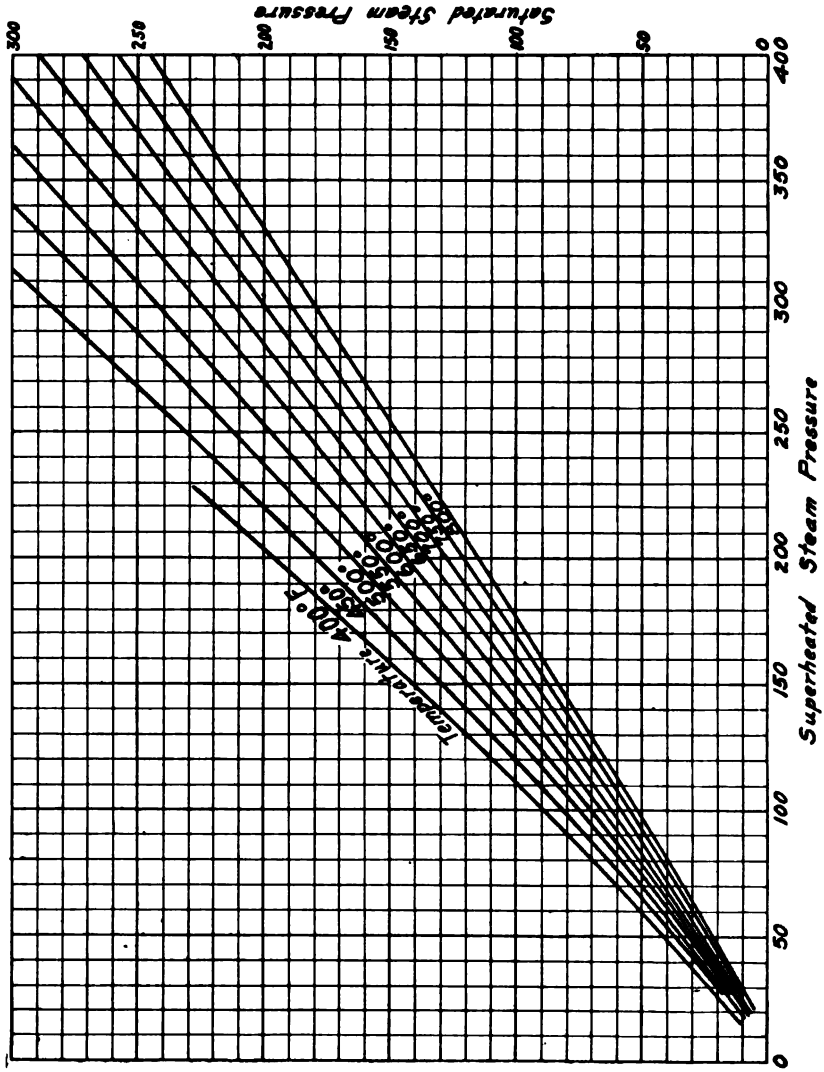

Fig. 151. Chart for Converting Superheated Steam into Saturated Steam in Finding Pipe Sizes.

The losses due to obstructions can be determined by:

$$H = k\frac{v^2}{2\,g} \qquad (21)$$

H = Friction head, feet
k = Constant
v = Velocity, ft. per sec.
g = Acceleration due to gravity

For the constant k, *Gebhardt* gives the following values:

45 deg. ell	0.182
90 deg. ell	0.98
Gate valve	0.182
Globe valve	1.91
Angle valve	2.94

The friction caused by valves and fittings can be expressed in terms of equivalent length of straight pipe; the following values are used:

Obstruction	Pipe Diameters
45 deg. ell	6
90 deg. ell	30
90 deg. tee	60
Gate valve	6
Globe valve	60
Angle valve	90
Bend, with radius equal pipe diameter	20
Bend, with radius equal 2 to 8 diameters	10

Water velocities in power plant practice range from 50 to 400 ft. per minute. The velocities in suction lines, especially in those carrying hot water, should be from 75 to 150 ft. per minute. A velocity of from 300 to 400 ft. per min. is common in boiler feed lines.

Expansion and Contraction

THE expansion and contraction of piping because of temperature changes is large enough to demand careful consideration. Higher pressures and higher degrees of superheat emphasize the importance of the subject, as does also the increasing use of efficient insulating materials. Formerly it was assumed that radiation from the surface of a pipe reduces its expansion to about half the theoretical amount, but actual tests have shown that the expansion of well-insulated pipe closely approaches the theoretical value.

The amount a pipe will expand depends upon its initial length, the rise in temperature to which it is subjected, and the coefficient of linear expansion of the material. This statement is expressed by the following formula:

$$l = C\,h\,(t_1 - t) \qquad (22)$$

l = Expansion, inches
C = Coefficient of linear expansion, per deg. F.
h = Initial length, inches
t = Initial temperature, deg. F.
t_1 = Final temperature, deg. F.

The coefficient of linear expansion is not constant at all temperatures. In calculating the expansion of piping, the mean coefficient must be used. The coefficients of expansion of cast iron at different temperatures have the following values:

Deg.	Coefficient
100	0.00000600
150	0.00000612
200	0.00000625
250	0.00000642
300	0.00000660
400	0.00000700
500	0.00000740

Philadelphia & Reading Railroad Terminal, Philadelphia, Pa., operating 1500 H. P. of Heine Standard Boilers.

The coefficient of linear expansion of other materials can be obtained by multiplying these values by 1.1 for wrought mild steel, 1.5 for wrought copper, and 1.6 for wrought brass. Table 30, due to *Gebhardt*, gives the mean coefficient of linear expansion of materials for different temperature ranges.

Table 30. Coefficients of Linear Expansion of Piping Materials.

Material	Temperature Range	Mean Coefficient C per Deg. F.
Wrought iron and mild steel	32–212	0.00000656
Wrought iron	32–572	0.00000895
Cast iron	32–212	0.00000618
Cast steel	32–212	0.00000600
Hardened steel	32–212	0.00000689
Nickel-steel, 36 per cent nickel	32–572	0.00000030
Copper, cast	32–212	0.00000955
Copper, wrought	32–572	0.00001092
Cast brass	32–212	0.00001043
Brass wire and sheets	32–212	0.00001075

Table 31. Increase of Length, in Inches per 100 Feet, of Steam Pipes.

Temperature Increase, Degrees	Cast Iron	Wrought Iron	Steel	Brass and Copper
50	0.36	0.40	0.38	0.57
100	0.72	0.79	0.76	1.14
125	0.88	0.97	0.92	1.40
150	1.10	1.21	1.15	1.75
175	1.28	1.41	1.34	2.04
200	1.50	1.65	1.57	2.38
225	1.70	1.87	1.78	2.70
250	1.90	2.09	1.99	3.02
275	2.15	2.36	2.26	3.42
300	2.35	2.58	2.47	3.74
325	2.60	2.86	2.73	4.13
350	2.80	3.08	2.94	4.45
375	3.15	3.46	3.31	5.01
400	3.30	3.63	3.46	5.24
425	3.68	4.05	3.86	5.85
450	3.89	4.28	4.08	6.18
475	4.20	4.62	4.41	6.68
500	4.45	4.90	4.67	7.06
525	4.75	5.22	4.99	7.55
550	5.05	5.55	5.30	8.03
575	5.36	5.90	5.63	8.52
600	5.70	6.26	5.98	9.06
625	6.05	6.65	6.35	9.62
650	6.40	7.05	6.71	10.18
675	6.78	7.46	7.12	10.78
700	7.15	7.86	7.50	11.37
725	7.58	8.33	7.96	12.06
750	7.96	8.75	8.36	12.66
775	8.42	9.26	8.84	13.38
800	8.87	9.76	9.31	14.10

Approximate values for the linear expansion of steam pipes of cast iron, wrought iron, steel, brass and copper as given in *Machinery's Handbook*, will be found in Table 31.

If the ends of a pipe were fixed and the pipe were heated, the tendency to expand would create a compressive stress. For the temperature changes common in power plants this stress would far exceed the compressive strength of the material. The axial force exerted by expanding or contracting pipe can be calculated as follows:

$$P = C\,E\,A\,(t_1 - t) \qquad (23)$$

P = Axial force, pounds
C = Coefficient linear expansion
E = Modulus of elasticity
A = Sectional area of pipe wall, sq. in.
t = Initial temperature, deg.
t_1 = Final temperature, deg.

The moduli of elasticity of materials are as follows:

Wrought iron	25,000,000
Steel	30,000,000
Cast iron	15,000,000
Copper	15,000,000
Brass	10,000,000

According to this formula, a 6-in. extra heavy wrought iron pipe 200 ft. long, if heated or cooled through a temperature range of 300 deg., exerts an axial force of 573,750 pounds. The sectional area of the metal of the pipe is 8.5 sq. in. so that the unit stress produced is much larger than the ultimate strength of the material. A temperature range of 300 deg. is by no means uncommon, so that for runs much shorter than the one assumed, piping must be free to expand or contract, and its expansion must be so controlled and directed that it will not strain connections, valves or fittings.

Pipe Anchors

THE expansion of piping cannot be limited, but its direction can be predetermined by anchoring one end, both ends or the middle of a run. If one end is anchored, the expansion must be absorbed at the free end of the line. If both ends are anchored, the expansion will be from them toward the middle of the run and must be absorbed, preferably at some one place. With center anchorage the expansion is forced toward the free ends of the line, where it must be absorbed.

Anchors must be firmly fastened to a rigid and heavy part of the power-plant structure, and must also be securely fastened to the pipe. If the pipe is not prevented from moving at the point at which the anchor is applied, the entire equipment for absorbing expansion is useless, and severe stresses will be thrown on all parts of the piping system. When both ends of a straight run are anchored with an expansion joint between, the end thrust is the steam pressure multiplied by the cross-sectional area of the pipe at its largest diameter. With slip joints like Fig. 153, the area is that of the outside diameter of the sleeve; and with corrugated joints as Fig. 154, or their equivalent, the largest inside diameter of the corrugations is to be taken. Thus, a 12-inch pipe with a slip-joint carrying steam at 250 lbs., will develop an end thrust of nearly 17 tons, and it may be greater than this with a corrugated joint.

Expansion Joints

PIPE bends offer a satisfactory means of providing for expansion. The radius of a bend should not be less than five pipe diameters. The pipe should be straight on each end for a distance equal to twice its diameter. Pipe bends should be fitted with extra-heavy lapped or welded flanges, because the joints are subjected to severe stresses. Expansion is absorbed by a bend only because it is sprung out of normal shape, thus permitting the line to expand.

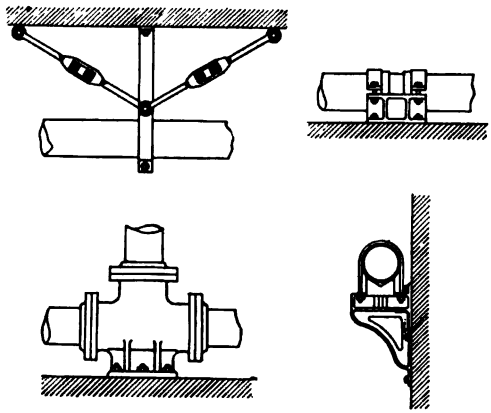

Fig. 152. Typical Pipe Anchors.

Table 32, due to the *Crane Company,* shows the linear expansion possible with quarter bends. The expansion values can be multiplied by 2 for "U" bends, by 4 for single offset bends or "Expansion U" bends, and by 5 for double offset bends or circle bends. The values given do not take into consideration the springing of the bends when installing them. When a bend is sprung a distance equal to that in the table, twice the linear expansion given can be absorbed.

Springing pipes when cold, so that they are then under tension, increases the linear expansion that can be cared for, and affords relief to lines used almost continuously at or near their maximum temperature.

Table 32. Expansion (in Inches) Cared for by Quarter Bends.

Size of Pipe, Inches	MINIMUM RADIUS, IN.		RADIUS OF BENDS, INCHES										
	Standard Pipe	Extra Strong Pipe	20	30	40	50	60	70	80	90	100	110	120
2½	10	7	⅜	⅞	1½	2¼	3¼	4½	5⅞	....	....	....	.....
3	12	8	⅜	11/16	1 3/16	1⅞	2¾	3⅝	4¾	6	....	....	.....
3½	14	10	5/16	⅝	1	1⅝	2⅜	3¼	4¼	5⅜	....	....	.....
4	16	12	¼	½	15/16	1 7/16	2⅛	2⅞	3¾	4¾	5¾	....	.....
4½	18	14	¼	7/16	⅞	1 5/16	1⅞	2½	3⅜	4¼	5¼	....	.....
5	20	15	....	⅜	¾	1 3/16	1¾	2⅜	3	3⅞	4¾	5¾	.....
6	26	20	....	⅜	⅝	1	1½	2	2½	3¼	4	4¾	5¾
7	30	24	....	....	9/16	⅞	1 5/16	1¾	2¼	2⅞	3½	4¼	5¼
8	34	28	....	....	½	¾	1⅛	1½	2	2½	3	3¾	4⅜
10	45	40	....	....	....	⅝	⅞	1¼	1½	2	2½	3	3½
12	54	50	....	....	....	½	¾	1	1⅜	1⅝	2	2½	3
14	70	65	....	....	....	....	....	⅞	1⅛	1½	1¾	2⅛	2½

Table 33 gives data as to minimum allowable radius and length of tangent, useful in laying out expansion bends. The illustrations annexed to the table show different designs.

Expansion joints are of two general types. Slip joints consist primarily of a brass sleeve, sliding in a stuffing box. They are made with and without

Broad Street Station of the Pennsylvania Railroad, Philadelphia, Pa., equipped with 2000 H. P. of Heine Standard Boilers.

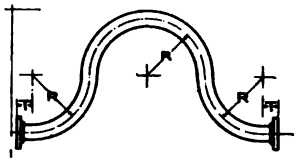

Expansion U Bend

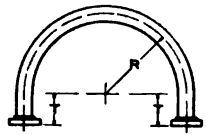

U Bend

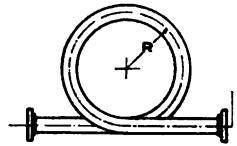

Circle Bend

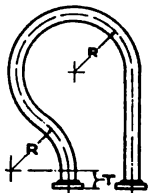

Single Offset U Bend

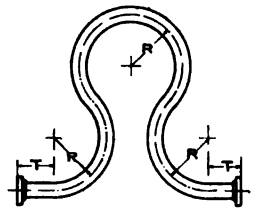

Double Offset Expansion U Bend

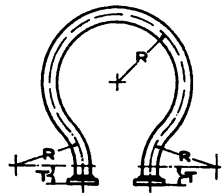

Double Offset U Bend

Table 33. Expansion Pipe Bends of Lap-Welded Steel Pipe.
(Crane Co. 1917)

Size of Pipe.....Inches		2½	3	3½	4	4½	5	6	7	8	9	10	12	14	15	16	18	20	22	24
R—Minimum Advisable Radius of Bends.....Inches		12½	15	17½	20	22½	25	30	35	40	45	50	60	70	75	80	108	120	132	144
Shortest Radius to which Pipe can be bent...	*Standard Pipe...Inches	10	12	14	16	18	20	26	30	34	42	45	54	70	75	80	90	104	132	144
	†ExtraStrong Pipe Inches	7	8	10	12	14	15	20	24	28	35	40	50	65	70	78	88	104	132	144
T—Minimum Length of Tangent or Straight Part of Bends.	Screwed & Shrink. Inches	4	4	5	5	6	6	7	8	9	11	12	14	16	16	18	18	18	18	18
	Craneweld.....Inches	....	5	5	5	5	5	6	6	6	6	7	7	7	7	8	8	8	9	9
	Cranelap.....Inches	....	6	6	6	6	7	7	8	8	9	10	10	14	14	16	18	18	20	20

*For 14 inch O. D. and larger Pipe having 7/16 inch or lighter metal. †For 14 inch O. D. and larger Pipe having ½ inch or heavier metal.

Broad Street Station of the Pennsylvania Railroad, Philadelphia, Pa., equipped with 2000 H. P. of Heine Standard Boilers.

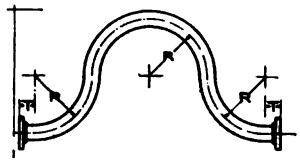

Expansion U Bend

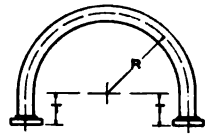

U Bend

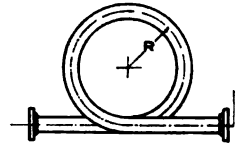

Circle Bend

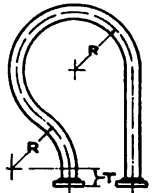

Single Offset U Bend

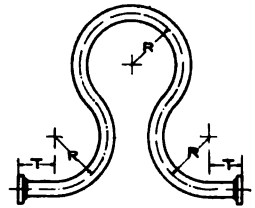

Double Offset Expansion U Bend

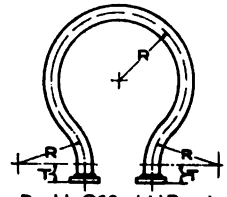

Double Offset U Bend

Table 33. Expansion Pipe Bends of Lap-Welded Steel Pipe.
(Crane Co. 1917)

Size of Pipe.....Inches		2½	3	3½	4	4½	5	6	7	8	9	10	12	14	15	16	18	20	22	24
R—Minimum Advisable Radius of Bends.....Inches		12½	15	17½	20	22½	25	30	35	40	45	50	60	70	75	80	108	120	132	144
Shortest Radius to which Pipe can be bent...	*Standard Pipe...Inches	10	12	14	16	18	20	26	30	34	42	45	54	70	75	80	90	104	132	144
	†ExtraStrong Pipe Inches	7	8	10	12	14	15	20	24	28	35	40	50	65	70	78	88	104	132	144
T—Minimum Length of Tangent or Straight Part of Bends.	Screwed & Shrink. Inches	4	4	5	5	6	6	7	8	9	11	12	14	16	16	18	18	18	18	18
	Craneweld.....Inches	....	5	5	5	5	5	6	6	6	6	7	7	7	7	8	8	8	9	9
	Cranelap.....Inches	....	6	6	6	6	7	7	8	8	9	10	10	14	14	16	18	18	20	20

*For 14 inch O. D. and larger Pipe having 7/16 inch or lighter metal. †For 14 inch O. D. and larger Pipe having ½ inch or heavier metal.

anchor bases, and with traverses up to about 10 inches. In the second type, expansion is cared for by the axial spring of a corrugated copper pipe. For high pressures, the copper is re-enforced by inner and outer iron equalizing rings. Both types are useful when lack of space prevents the use of pipe bends.

Fig. 153 illustrates the *Ross* expansion joint, showing the guide for maintaining the pipes in alignment.

Fig. 153. Ross Crosshead Guided Expansion Joint.

The piping between the anchors should be carefully lined up so that there will be no tendency for it to spring or buckle if the slip joint is too tightly packed. Bolts are necessary to prevent the sleeve being drawn out by such circumstances as the failure of an anchor.

Fig. 154 is the Badger corrugated copper expansion joint, showing the reinforcing rings which lie in the corrugations and relieve the copper pipe of carrying the pressure.

Fig. 154. Badger Self-Equalizing Expansion Joint.

The number of corrugations is dependent upon the amount of expansion to be absorbed.

2 corrugations take care of 1 in. expansion.
3 corrugations take care of 1½ in. expansion.
4 corrugations take care of 2 in. expansion.

The advantage of this type of joint is that no packing is required.

Double-swing fittings are satisfactory for small piping in short runs, but not for heavy pipes or long runs. For a really good expansion joint, the threads of the screwed connections should be carefully cut and then ground in. It is hardly to be expected that a screwed connection can be steam-tight, and at the same time permit easily any movement in fitting the pipe.

Swivel Joints are similar to the double-swing screwed fittings, without the disadvantage of the latter. They can be used for lines containing flanged fittings, or when pipe bends cannot be installed.

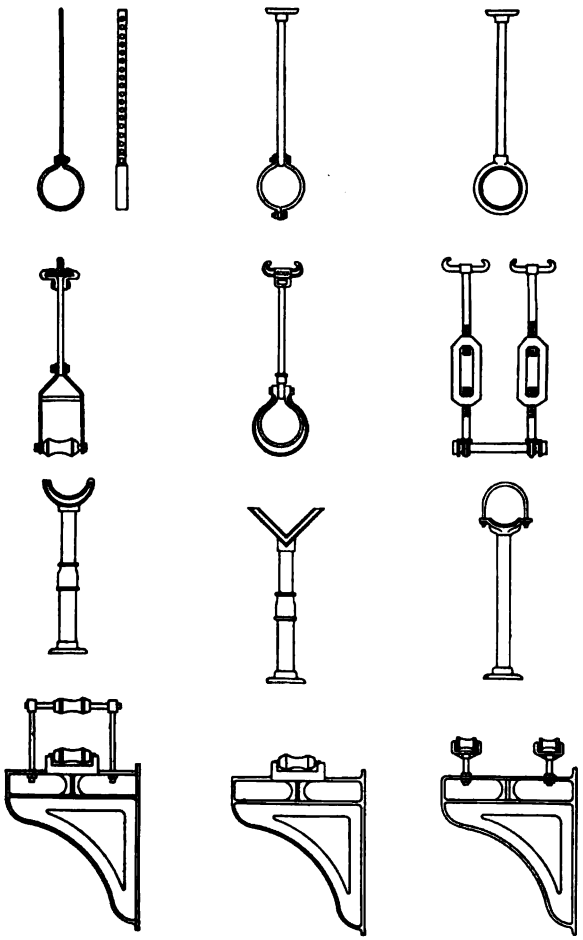

Fig. 155. Three Classes of Pipe Supports—Hangers, Standards, and Brackets.

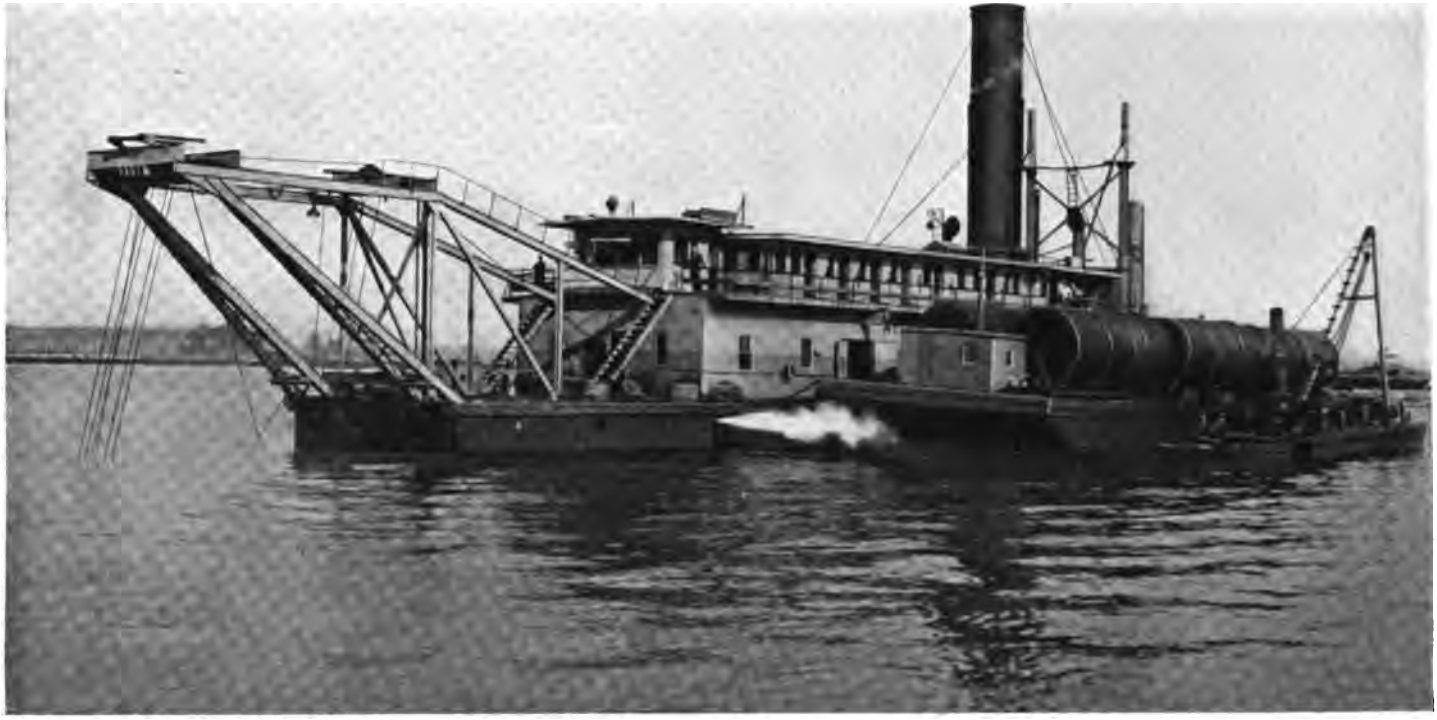

27 inch Hydraulic Dredge "Geo. W. Catt," of the Atlantic, Gulf & Pacific Company, equipped with Heine Standard Boilers.

Flexible metallic tubing is excellent for absorbing expansion in small pipes. Care must be taken that it is not subjected to thrust or tension. It must be arranged in the same manner as *Pipe bends* just described.

Supports and Hangers

PIPE supports and hangers vary of necessity with the plant layouts, but their construction is fairly well standardized. Pipe supports, Fig. 155, can be divided roughly into three classes,—hangers, standards and brackets. Hangers are used for supporting piping from ceilings and overhead structural members; standards for supporting piping on and from engine and boiler room floors; and brackets for supporting piping on and from walls and vertical structural members.

The plainer and lighter types of pipe hanger can be used for short runs, with steam or water lines up to about 6 in. diameter. On long runs they can be used if the connection between the hanger ring and the ceiling is long, and if its upper end is not rigidly attached to the ceiling.

For large pipe, long runs or when the supporting strap must be short or rigid, the hanger should be equipped with one or more rollers, The support for high temperature lines should be equipped with a lower roller and also with a roller resting on the top of the pipe. The upper roller should be bolted by tie-rods to the support. Springs should be placed between the support and the rods, so that the latter can move slightly. Supports for large or heavy mains should be adjustable to maintain alignment.

Steam Separators

TO protect plant equipment and obtain economical operation, all piping systems should be provided with separators to eliminate entrained moisture, condensate oil, grease or other foreign matter. Moisture carried into the steam cylinder lessens the economy in steam and lubricants, and may also cause damage. Oil in exhaust steam fouls the condensate, lodges in condensers, accumulates on turbine blades, and on the inner surfaces of radiators, and renders the condensate unsuitable for boiler feed.

The function of a *steam separator* is to deliver clean, dry steam. Steam separators are used on live and superheated steam lines. The *oil separator* extracts the grease, leaving a condensate that is pure distilled water and therefore suitable for boiler feeding or for industrial processes. Oil separators are used on exhaust and vacuum steam lines, for low pressure turbines, feed water heaters, condensers and heating systems.

Steam and oil separators operate either by intercepting the steam current, or by changing its direction. Cast iron bodies having various shaped grids in the form of single or multiple baffles are ordinarily used for separators. The accumulated matter is drawn off intermittently or is taken care of continuously by a trap.

The separators, Figs. 156, 157 and 158, are practical designs intended for vertical, horizontal or angle pipe connection. A single, ribbed baffle has a steam port at each side; below it is the collecting well with its water gage column. Steam entering from one end of the pipe line impinges on the baffle, where it leaves the water or oil, and continues on around either side of it, through the steam ports. The intercepted water or oil is directed, by the ribs on the baffle, down to the well. A drain, to catch any condensation, is also provided on the "dry" or steam outlet side.

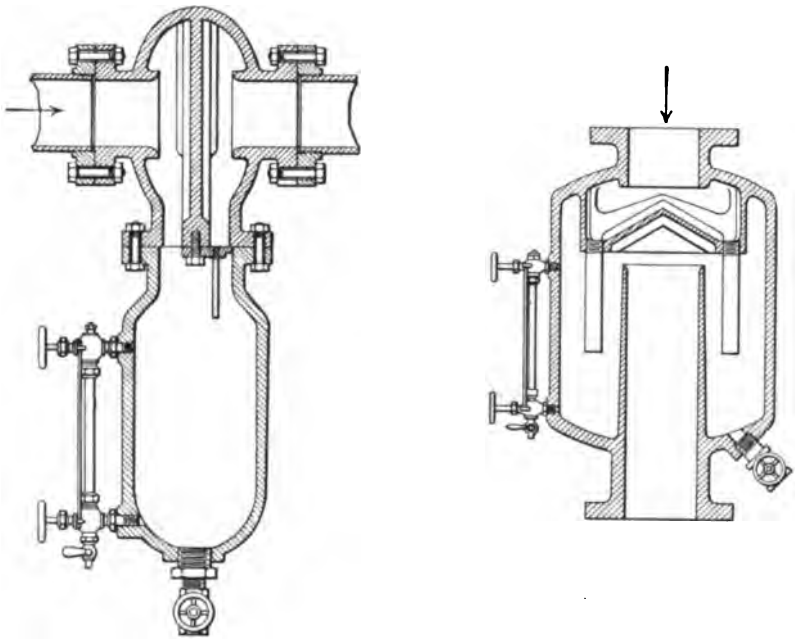

Fig. 156. Horizontal and Vertical Steam Separators.

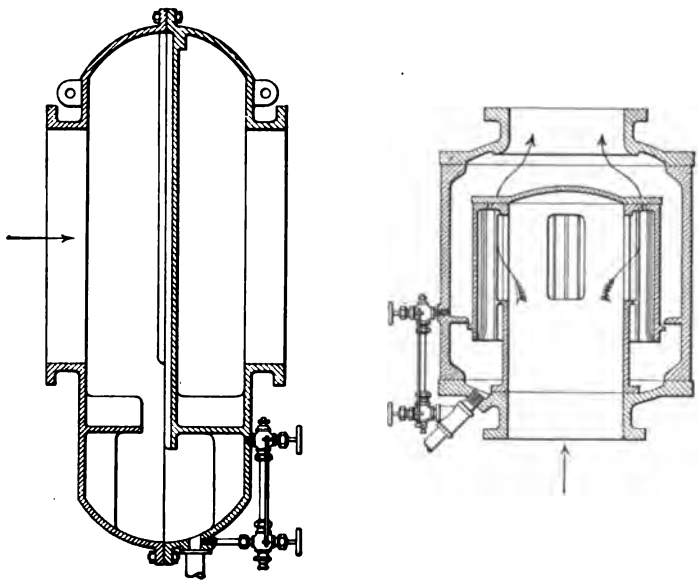

Fig. 157. Horizontal and Vertical Oil Separators.

The *receiver type separators,* Fig. 158, are usually made of plate and may have riveted or welded joints. This construction is used when long lines of piping might be subject to violent vibration. The large receiver serves as a reservoir for steam and is useful to supply the intermittent demand of a slow speed engine, and receives any inrush of water from the main. The water in the receiver is stored until a trap drains it away. The steady flow of steam resulting from the installation of a receiver separator often makes possible the use of smaller mains, which decrease the first cost, and reduce the loss of heat by radiation.

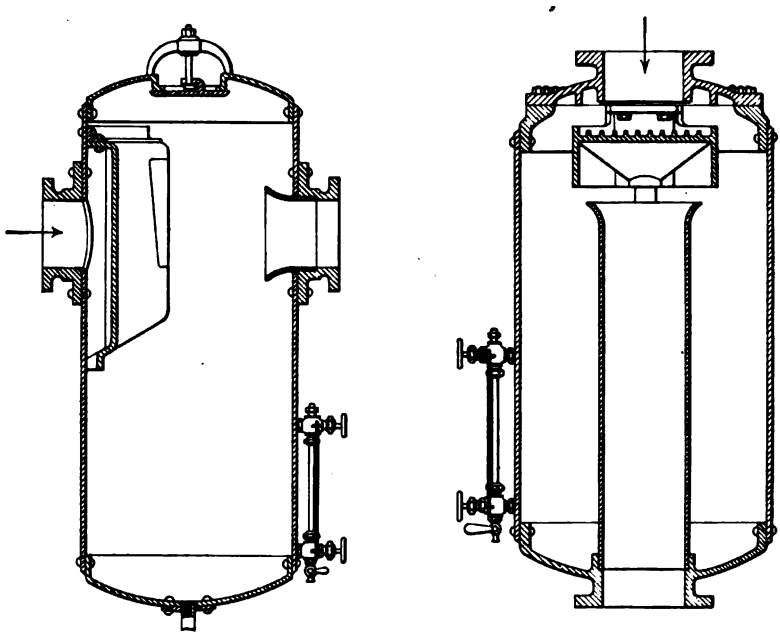

Fig. 158. Horizontal and Vertical Receiver Separators.

All separators should be selected on a basis of the steam supply required, and not by the size of the flange or pipe outlets.

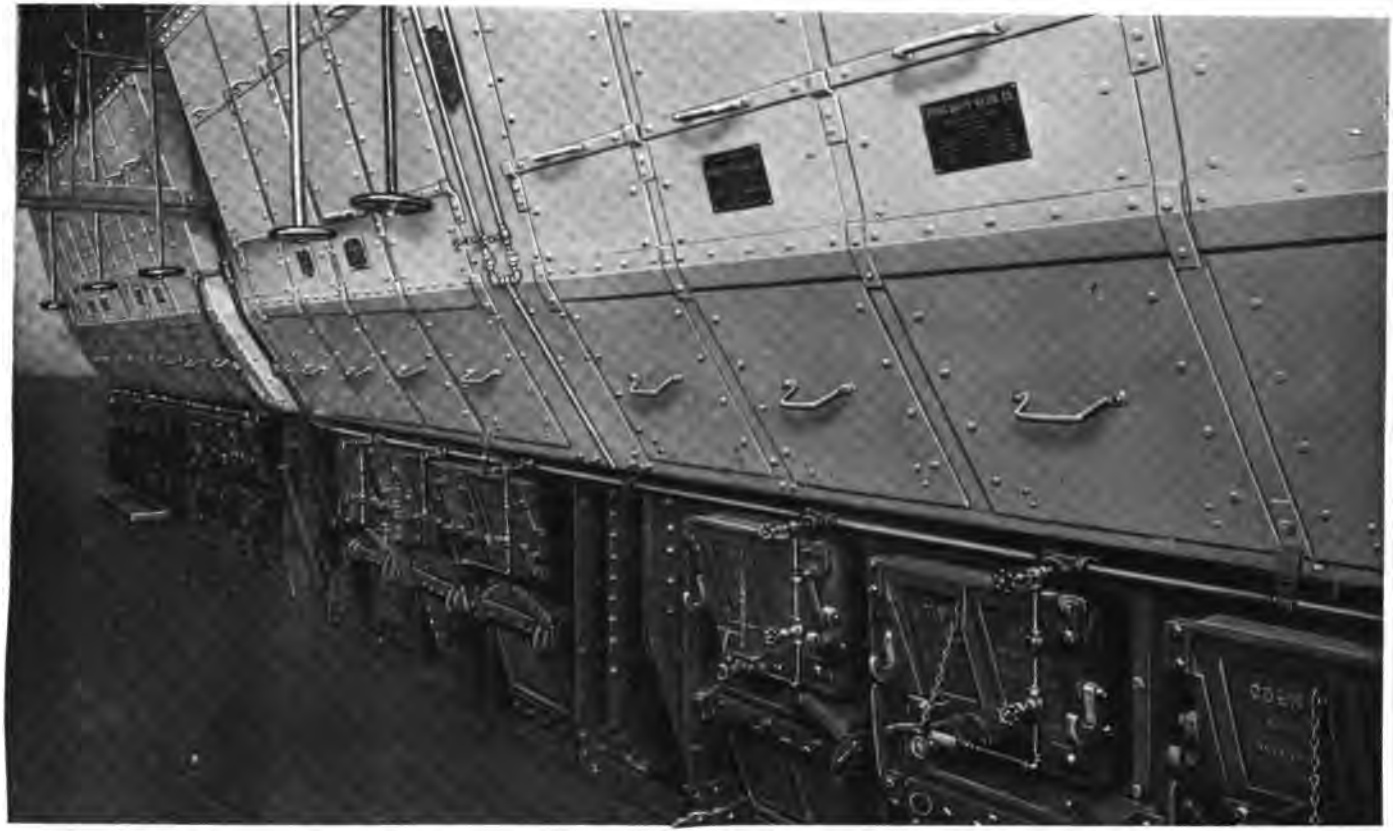

Four Heine Marine Cross Drum Boilers, each having 2783 sq. ft. of heating surface and 150 sq. ft. of superheating surface, installed in S. S. "Oskaloosa," built by the Western Pipe & Steel Co., San Francisco, Cal.

CHAPTER 9

AUXILIARIES

Quantity of Feed Water

THE quantity of feed water required per hour is the B.H.P. to be developed, multiplied by 34.5, and divided by the factor of evaporation. To allow some margin, the division by the factor of evaporation is omitted. As there are 8.3 lb. of water to the gallon, the rate becomes 4.15 gallons per hour or 0.07 gal. per minute. This figure, expressed as 7 g.p.m. per 100 B.H.P., is frequently used in determining pump sizes; but it is too small.

Boilers are often run at considerable overloads for long periods. Therefore, the quantity of feed water required must be based on the probable B.H.P. to be developed, and not on the boiler rating. As the demand for feed water fluctuates with the load, the supply must be large enough to take care of peak loads. Pump makers allow from 7½ to 10 g.p.m. per 100 B.H.P. developed to take care of contingencies.

The feed pump must not only overcome the steam pressure in the boiler, but must also develop a head sufficient to overcome pipe friction in the system, the resistance of the feed check valves, and some excess pressure besides. Therefore the feed pump must usually discharge at a pressure of 25 to 30 lb. in excess of the boiler pressure.

Direct-Acting Steam Pumps

PUMPS are divided into three general types: direct-acting steam pumps, centrifugal pumps, and positive displacement power-driven pumps.

The popularity of the direct-acting steam pump as a boiler feeder is due in great part to the fact that it is the oldest and best known type. Often it is the only type of pump well understood by the operating engineer, and so represents the only good solution to the feed problem.

For feed purposes the simple steam end is generally used. It is not so economical of steam as the compound or triple expansion steam end, but the latter cost so much more that only rarely are they selected. The greater number of parts with the complication and extra space are also against the compound and triple pumps.

Tables 36 and 37 show the economies of steam-turbine-driven centrifugal pumps and the direct-acting steam pump. If the plant layout does not provide an excess of exhaust steam for feed heating, or other useful work, the exhaust steam from the pump can be thus used to increase the thermal efficiency of the plant. On the other hand, if the exhaust steam has to be wasted to the atmosphere, the economy of auxiliaries becomes important and the direct-acting feed pump is often displaced by a more efficient type. The pump that gives the average water horsepower for the least expenditure for coal is the one to be desired, therefore the great difference in the steam consumption of direct-acting pumps and centrifugals, in the larger sizes, eliminates the former from consideration.

The centrifugal pump is not suited to the smaller capacities, so that the direct-acting steam pump finds one of its most useful fields in installations up to 2,000 boiler horsepower, in which a compact steam pump is desired. Its

chief competitor in this capacity range is the motor-driven triplex pump, but owing to the lower cost and greater ease with which steam can be supplied, the steam pump is often preferred. Above 2000 boiler horsepower the centrifugal pump is usually favored.

Direct-acting steam pumps can be classified as to the number of steam and water cylinders, that is, simplex or duplex, one steam and one water cylinder, or two of each side by side.

Simplex pumps are often preferred for boiler feed service because the design always insures a full, complete stroke. When the pump cannot "short stroke," the piston rods, cylinder liners and plungers cannot wear down in the center, leaving a shoulder at each end. These shoulders may cause sticking of the pump or breakage of the cylinder or stuffing boxes due to the wedging effect of the "shouldered" portions, when the stroke is unexpectedly long or full.

Another advantage of the simplex pump is that it has only about half as many working parts as has a duplex pump. Consequently fewer parts wear out and fewer spare parts need to be carried. This applies particularly to the water valves.

The simplex pump has but one water piston. Even if this is double acting, a steady and uniform flow of water from the pump is precluded. The steam valve-gear always reverses quickly at the end of the stroke, but there will still be some pause at this point. A break in the flow of the water results, sometimes developing a water hammer in the discharge lines. Simplex pumps should be equipped with a generous sized air chamber on the discharge line. The chamber must always be kept well filled with air to act as a cushion and to compensate for that absorbed by the water.

Table 34. Ratings of Simplex Direct-Acting Steam Pumps.

SIZE	Single Strokes per Min.	Double Strokes or R. P. M.	Capacity, Gallons per Min.	Boiler Hp. (34½ lb. Water per Hr.)	Piston Speed, Ft. per Min.
3x2x4	57	28.5	3	50	19
4½x3¾x6	50	25	7.5	110	25
5½x3¼x7	49	24.5	12.2	175	25
6x4x8	48.6	24.3	21	300	32.5
7½x5x10	48	24	40	580	40
9x6x12	42	21	61	870	42
10x7x12	42	21	84	1,220	42
14x8x12	42	21	109	1,570	42

Table 34 gives the usual commercial sizes of simplex pumps and their normal ratings for boiler feed service. Under the heading "size" the three figures indicate the diameter of the steam and water cylinders and the length of the stroke. The sizes and ratings are the average prevailing among several of the prominent pump manufacturers. Some pumps, by virtue of large valve areas and water passages, are rated for greater boiler horsepowers than others of the same dimensions. The factor of safety may differ, thus affecting the rating. The sizes given indicate the usual range for this type of pump. The simplex pump is most popular in the smaller sizes, as the pulsating discharge effect is magnified in the larger sizes.

The rated capacities, in Tables 34 and 35, are based upon a volumetric efficiency of from 85 to 90 per cent. The efficiency attained in the boiler room depends upon the care taken of the pumps, and probably will not exceed 60 to 65 per cent. This is equivalent to realizing a capacity of about

70 per cent of the boiler horsepower given in Tables 34 and 35. The pump should then be of a size so that it can gain on the largest load likely to be carried, or so that the water level can be raised during a peak load if it has fallen too low, without racing the pump.

When hot water is handled the piston speed is from one-half to one-third of what would be good practice for pumping cold water. This is to prevent vaporization of the water and keep the pump from becoming "steam bound." If the piston speed is too high, the water will not follow the piston or plunger during the suction stroke, and a partial vacuum is formed in the plunger chamber. When the plunger is reversed it travels quickly through the vacuous space created and meets the water with an impact sufficient to cause a serious knock. The pump then vibrates badly and the knock may even damage the water valves or other parts, as well as the pipe lines.

The *duplex pump* (two water cylinders) discharges the water at a much more uniform rate of flow than the simplex type, as the steam valve gear of one side is actuated by the piston on the other side of the pump, and the steam valves are so designed that the two pistons are 90 deg. apart in the working cycle. Generally both water pistons are moving. At the end of the stroke of one piston, during the slight pause, the other side is working, thus maintaining a more even water flow than is present in a simplex pump. In operating these pumps both sides should have a "full" stroke, or the cylinders or stuffing boxes may be broken through the shoulders formed when "short stroking."

Table 35 gives the prevailing sizes and ratings of duplex pumps.

Table 35. Ratings of Duplex Direct-Acting Steam Pumps.

SIZE	EACH SIDE		Capacity, Gal. per Min.	Boiler H. P. (34½ lb. Water per Hr.)	Piston Speed, Ft. per Min.
	Single Strokes per Min.	Double Strokes or R. P. M.			
3x2x3	72	36	5.7	95	18
4½x2¾x4	57	28.5	11.4	190	19
5¾x3½x5	53	26.5	21.5	360	22
6x4x6	50	25	32	535	25
7½x5x6	50	25	50	840	25
7½x4½x10	49	24	65	1,080	40
9x5¼x10	48	24	87	1,450	40
10x6x10	48	24	116	1,940	40
10x7x10	48	24	156	2,600	40
12x7x12	42	21	164	2,750	42
12x8½x12	42	21	243	4,050	42
16x10¾x12	42	21	370	6,200	42

Piston pumps, or those having water pistons operating inside the water cylinder, and packed to a good fit, are necessarily more subject to water slippage or leakage past the pistons than is the plunger type, in which the leakage is through a stuffing box to outside the pump. In the plunger type the packing in the stuffing box can easily be adjusted to care for any leakage that develops due to wear. In the piston type the adjustment of the packing in the piston, if there is any, necessitates partly dismantling the pump. This is so troublesome as to be often neglected. The fact that the leakage cannot be easily detected renders this type unsuited to high pressure work, since the leakage increases with the pressure.

250 H. P. Heine Standard Boiler in course of erection at the Destructor Plant of the Boston Development & Sanitary Co., Spectacle Island, Boston, Mass. The Plant contains 2000 H. P. of Heine Standard Boilers.

Although wear of the plunger can be easily detected, the plunger is easily scored from dust and grit. Also plunger pumps cost more than the piston type so that they are used principally for the higher pressures. Piston pumps are not used for water pressures over 150 to 200 pounds. The plunger type is preferred where the pressures are in excess of 150 pounds.

Hot water has a corrosive effect upon iron, especially when it travels over the iron surface at velocities such as are present in a pump. It is well therefore to preserve the pump by making certain parts of brass or bronze. The water cylinder should have a brass liner, and the piston should be bronze or brass. The water valves can be of bronze or hard rubber, with bronze seats. The water piston, rod, or plunger, can be of iron or steel. Iron plungers are usually preferred, especially in the larger sizes, but unusual water conditions often dictate the use of bronze, even at a considerable increase in cost.

The performance of simple direct-acting steam pumps can be calculated from the following formulas:

$$H.P. = \frac{GH}{3960} \tag{24}$$

$$\frac{d^2}{k^2} = \frac{G}{S} \tag{25}$$

$$M.E.P. = F\ (P - BP) = 0.70\ (P - BP) \tag{26}$$

$$\frac{H''}{M.E.P.} = \frac{D^2}{d^2} \tag{27}$$

H = Discharge head, feet
H' = Head, feet
H'' = Head, pounds
G = Capacity, gal. per min., double acting pumps only, either simplex or duplex
S = Piston speed of pump, ft. per min. (for one side only of duplex pump)
d = Diameter of plunger or water piston, inches
D = Diameter steam cylinder, inches
$H.P.$ = Delivered or water horsepower
k = Constant = 5 in. for simplex pumps
= 3.55 for duplex pumps
$M.E.P.$ = Mean effective pressure in steam cylinder
P = Steam pressure at throttle, absolute
BP = Back or exhaust pressure, absolute
F = Diagram factor = 0.70.

Direct-acting pumps must be large enough to feed the boilers when operated at normal or slow speeds. A high speed direct-acting pump handling hot water may "knock" badly and cause damage to the discharge pipe lines.

Table 36. Steam Consumption—Simple Direct-Acting Steam Pumps. In pounds per water horsepower per hour.

Stroke, Inches	Steam Pressure at Pump, Pounds Gage								
	60	80	90	100	110	120	130	140	150
4	230	210	204	200	195	190	188	187	186
6	200	170	165	162	158	156	154	153	152
8	160	145	142	139	137	135	134	133	132
10	140	130	126	122	120	119	117	116	115
12	130	120	116	112	110	109	108	107	106
15	120	110	106	104	102	100	99	98	97
18	100	104	100	97	96	94	94	93	92

Table 36 gives the steam consumption of the simple pumps used for boiler service. Some designs will be more efficient than others, so that the table will not apply to every simple direct-acting boiler feed pump. The values are for pumps in good condition, with a well lagged steam cylinder, receiving dry saturated steam at the throttle, and exhausting to the atmosphere.

Centrifugal Pumps

CENTRIFUGAL pumps are compact, practically noiseless, require small foundations, and pump at practically a uniform rate. They require little lubrication or adjustment of packing. Once started, they can be left without attention for a considerable time.

These pumps are most in favor for the larger installations, in which the boiler capacity is 2000 horsepower or more. The running clearance inside the pump is small, at points where the water under discharge pressure is separated from the suction side, so that slippage must be considered. Many ingenious devices are used to reduce this leakage and to serve as a correction when it does occur. The clearances cannot be reduced enough to eliminate slippage, so that the capacity and hence the loss in small pumps is proportionately greater than in the larger ones. The larger sizes therefore give the best results.

Centrifugal feed pumps are usually of the multi-stage type, each stage doing its proportionate part of the work of increasing the water pressure. The maximum pressures are from 60 to 100 lb. per stage. Thus a 250-lb. discharge pressure would mean a three-stage pump. The water is received by the first-stage impeller, which picks it up and imparts to it a velocity head. This velocity is reduced, either in a channel of gradually increasing area, or in a diffusion ring having vanes and passages, while the water is conducted to the impeller of the next stage.

The head developed depends upon the velocity imparted to the water, and will therefore be governed by the peripheral velocity of the impeller. Thus for a given head there can be used either a large diameter impeller with a slow rotative speed or a smaller diameter and proportionately increased R.P.M., to give the same rim speed. As the diameter of the im-

peller governs the diameter of the pump it is desirable to have high speeds, with smaller impellers, to reduce the cost and the space required.

For ordinary, or small changes, the capacity of a centrifugal pump varies directly as the speed, and the head as the square of the speed. This applies particularly for maximum efficiency at the different heads.

The operating characteristics of a well designed feed pump are shown in Fig. 159. The curves are laid out so that heads, capacities and speeds are expressed in percentages. Thus if 500 g.p.m. is the normal capacity it will be shown as 100 per cent on the capacity scale; 250 g.p.m. will be given as 50 per cent; and 625 g.p.m. as 125 per cent of normal.

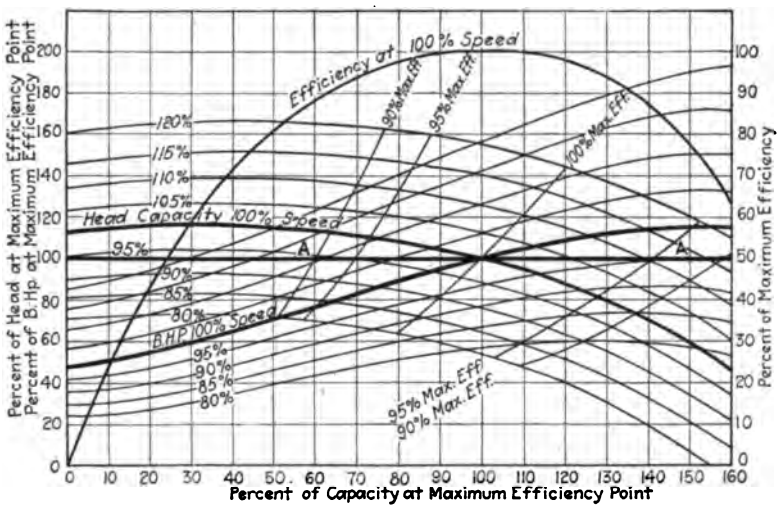

Fig. 159. Operating Characteristics of Centrifugal Pumps.

The heavy lines show the head, capacity and characteristics for normal speed operation and the lighter lines the performance at fractional speeds.

As boiler feeding takes place practically at constant pressure a change in capacity must be met by a change in speed or by throttling. Hence the head can be considered as fixed, and can be indicated as 100 per cent or the Line "A."

The head-capacity lines for different speeds cut the line "A" at points indicating the percentage or normal speed for the capacities at this head. The brake horsepower capacity lines will then show the percentage of normal horsepower for different speeds. Maximum efficiency lines give the actual pump efficiency for any head and capacity. These also are based upon percentages.

As an example, take a pump designed for 400 g.p.m., 200 lb. pressure, 2600 r.p.m., 62 per cent efficiency, and 75 brake horsepower required for driving. All these are represented by 100 per cent on the curve. Suppose it is desired to find the other conditions for a capacity of 300 g.p.m. Then say—

Capacity = 300 g.p.m. (given) = 75 per cent of normal
Head = 200 lb. = 100 per cent of normal (no change)
Speed = 96 per cent of normal (from curve) = 2500 r.p.m.
Efficiency = 96 per cent of normal (from curve) = 58.5 per cent
Brake horsepower = 80 per cent of normal (from curve) = 60 brake horsepower.

Kimball Building, Chicago, Ill., equipped with Heine Standard Boilers.

Fig. 159 shows the relations upon which depend the regulation of the pump to meet varying demands. The head-capacity curves give the best information as to the operation of centrifugal pumps. The efficiency curve should be flat, so that the efficiency is high over a wide capacity, thus maintaining good economy under speed regulation.

The horsepower curve should rise to a maximum at the normal operating capacity and then fall off so that no overload will be thrown on the driver should the pressure be reduced. This is particularly important in motor driven pumps, since overloads can be serious.

Table 37 gives capacities and steam consumption for different sizes of centrifugal feed pumps. The calculation of capacity is explained elsewhere.

Table 37. Performance of Three Stage Centrifugal Feed Pumps.
(150 Lb. Steam Pressure—175 Lb. Water Pressure—135 Ft. Per Stage)

Size, Inches	R. P. M.	G. P. M.	B.H.P.*	Pump Effic. Per cent	H.P. Req.	Turbine Water Rate, Lb. per Brake H.P per Hr.	Steam, Lb. per Water H.P. per Hr.
3	2,500 to 3,000	300	4,000	56	53	42	75
4	2,500 to 3,000	500	6,700	64	78	42	66
5	2,200 to 2,730	750	10,000	67	110	42	63
6	1,500 to 2,000	1,000	13,200	70	140	39	56
8	1,500 to 2,000	1,500	20,000	71	210	38	54

* 0.075 gal. per B.H.P. used to provide a factor of safety.

The turbine water rates represent commercial averages. The column at the right (steam per water H.P. per hour) is given so that the performance can be compared directly with that of direct-acting steam pumps.

Performance data, due to *J. Breslav*, are given in Table 38 for a boiler feed pump and for a compound duplex direct-acting steam pump. Both pumps were designed for 250 g.p.m. and were operated nine hours a day at 160 lb. steam pressure and 2 lb. back pressure.

Table 38. Operating Cost Comparison of Boiler Feed Pumps.

	Turbo Centrifugal	Comp. Duplex
First cost	$1,008	$980
Valves to be watched	0	14-18
Packing boxes	4	18
Oil used in 15 days, pints ....About	4	30
Grease, pounds	4	0
Maintenance, packing, etc., per year	$30	$120
Steam consumption, pounds per boiler horsepower per hour	38-40	40-55

A simple duplex steam pump would have cost here about $600 but the steam consumption would then be about 100 lb. per B.H.P. per hour. The comparison shows that the compound steam end type of a direct-acting pump is required, if the economy of the turbine driven centrifugal pump is to be obtained. The direct-acting pump is more complicated however, and the maintenance and lubrication charges are much greater.

The leading advantages of centrifugal pumps are compactness, silent running, durability and superior economy in cost of power, attendance and repairs, and the facility with which they may be adapted to any location

where they may be supplied with power by direct connection to an electric motor or steam turbine. As boiler feeders, they have the advantage over reciprocating pumps of continuous delivery without shock or hammering, and of producing no excessive pressure on feed mains for any adjustment of feed stop valves or other stoppage of pipe connections.

The commercial forms of centrifugal pumps are usually of the multi-stage type, either with or without diffusion rings.

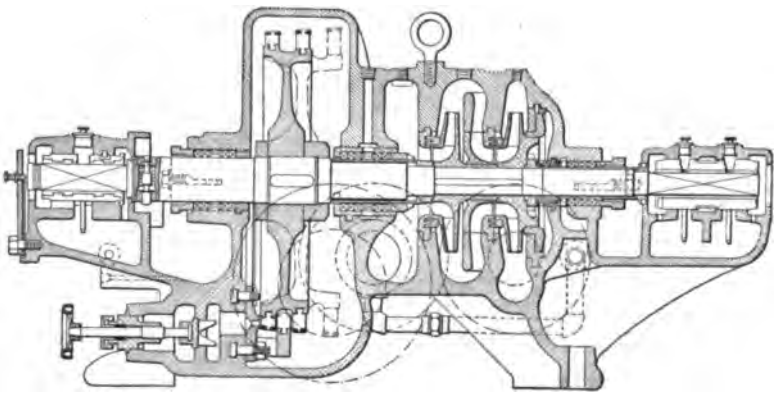

Fig. 160. De Laval Turbine Driven Centrifugal Boiler Feeder.

Fig. 160 shows a pump without diffusers. The water after being picked up by the impeller of one stage is discharged to the next stage through a return channel cast as a part of the pump casing. This channel is designed so as to reduce gradually the velocity of the water leaving the impeller and transform this velocity to pressure head. The advantages of this type of pump are said to be simplicity of construction and the absence of small water passages that might become blocked by foreign matter.

A single stage direct turbine-driven centrifugal feed pump has attained some favor in Europe and is also beginning to be recognized in this country. This has a pump impeller and turbine wheel mounted on one short shaft. The pump and turbine housings are close to each other and as the machine runs at a high speed, 5000 to 8000 r.p.m., it is a compact unit. These pumps are designed to produce sufficient pressure to feed any usual boiler, and can operate against a pressure of 250 lb. or greater. Owing to the high speed, this pump is not accepted for general boiler feed use in this country, in spite of its low cost and the small space required.

When the water is fed through an economizer to the boiler a four-stage pump can be arranged so that one stage pumps to the economizer and through it to the main feed pump, which has three stages and discharges into the boiler. Sometimes the pumping unit is made up of two separate pumps, each with its own driver; but two pumps on one base, and driven by one prime mover, are to be preferred. Thus each pump always works in harmony with the other. The two pumps can be arranged, with the economizer stage uncoupled or by-passed, to feed directly to the boilers. These economizer sets are particularly well adapted to plants in which it is desired to decrease the water pressure in the economizer tubes, because the pressure in the economizer is usually one quarter of that with the ordinary feed pump.

Fig. 160a shows a multi-stage high-pressure centrifugal pump used for boiler feeding. It is really a volute pump so arranged that the volute of one stage is led into the suction of the next stage, and the high pressure is attained by putting in series as many stages as necessary. It is claimed that the advantage of the volute, besides the simplicity, is that the efficiency is maintained for a greater range than with the diffusion vane type of pump; also the cost of the diffusion vanes, which are subject to wear, is eliminated. The force on the horizontal split of the case, due to the high pressure of the water, is taken care of by the bolts on the outside flange, and by through bolts nearer the center line. The hydraulic balancing mechanism, which performs the functions of a thrust bearing, is so arranged that both stuffing boxes are under a low pressure and sealed with water. Every part of the pump, except the case and shaft, is made of bronze. The two ring-oiled bearings are equipped with large oil reservoirs.

Turbine-driven centrifugal boiler feed pumps have many advantages in addition to their compactness and reliability.

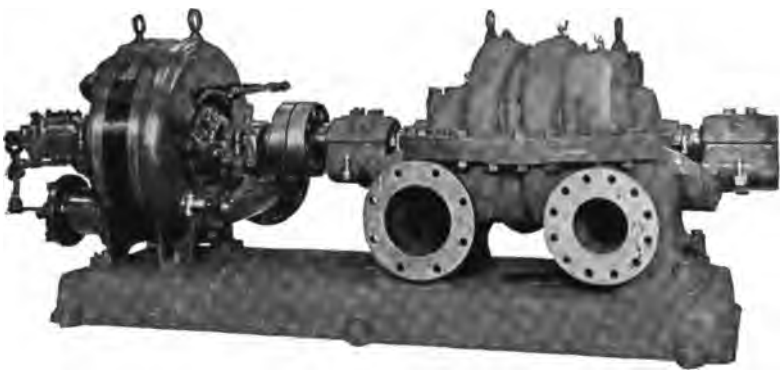

Fig. 160a. Lea-Courtenay Multi-stage High-pressure Centrifugal Pump for Boiler Feeding.

They give reliable and uninterrupted service with little, and often unskilled, attention.

There is an entire absence of pulsation, shock, vibration or over-pressure in pipe lines, thus making relief valves unnecessary and rendering the pump suitable for use with automatic boiler feed regulators acting independently at each boiler, or with feed-water meters.

The cost of maintaining the piping system is reduced, because less strain is thrown upon it.

Close governing is obtained, either at constant speed or at constant excess pressure.

There is entire freedom from liability to injury by overloading.

Troublesome parts, such as valves, packings, sliding surfaces, air chamber, etc., are eliminated.

There is little expense for attendance and upkeep, due to the simplicity and few wearing parts. All parts are easily accessible.

Cylinder lubricants are not required and little oil of any kind.

The steam consumption is lower than that of direct-acting pumps, and superheated steam or low pressure steam can be used.

The exhaust is entirely free of oil and can be used in open feed heaters, or introduced into an intermediate stage of the main turbine without danger of introducing oil into the boilers.

Erecting Heine Standard Boiler for the Caribbean Petroleum Co., Mene Grande, Venezuela.

Direct-Acting Power Pumps

DIRECT-ACTING power pumps are rarely used for boiler feeding. These positive displacement pumps are selected usually where the available sources of motive power prevent the use of the direct-acting steam pump.

These pumps are reliable, their maintenance cost is low and in small capacities their efficiency usually higher (lower brake horsepower required) than centrifugal pumps.

In the larger sizes, 3000 boiler horsepower and over, they become expensive and the centrifugal pump is more generally used.

The triplex plunger pump gives a steady flow of water, the cost of power is less than the centrifugal pump when applied to boiler feeding, it can be automatically regulated, it is reliable and if given intelligent attention it will maintain its high efficiency for 15 to 20 years with no cost for repairs except for packing and valves.

The high efficiency of the triplex pump is attained not merely at its rated capacity, but is nearly constant throughout the full range of operation provided its capacity is regulated by changing the speed. The average efficiency is therefore greater than a mere comparison of catalog percentages would indicate.

The triplex pump has a practically constant efficiency at different speeds. The capacity is proportional to the speed. The discharge head does not have to be throttled to regulate its capacity. The efficiency of the variable-speed direct-current motors used to drive triplex pumps is more nearly constant at variable load and speed than the efficiency of constant-speed motors is at the variable load used to drive centrifugal pumps. Small reciprocating engines have much better efficiencies at variable speeds than small turbines at variable loads.

Comparing two types of boiler-feeding units, one a motor-driven centrifugal pump and the other a motor-driven triplex pump, taking into consideration the daily load curve of the plant and the efficiency curves of the two pumps, together with the efficiency curves of the two motors, it was found that the actual coal required by the triplex pump would be less than one-half that required by the centrifugal. A similar comparison covering steam driven units would show even greater difference in favor of the triplex pump. Against these advantages are, more space required, higher first cost, more complicated apparatus and more attendance.

With stokers of the forced-draft type, states *J. C. Hawkins,* the engine that drives the fan can be used to drive the triplex pump also. The feed pump is then operated at a speed in proportion to the amount of steam used and needs little other regulation. If automatic feed-water regulators are used a relief valve set at about 30 lb. in excess of the boiler pressure must be placed in the discharge line (probably by-passed back to the suction) to prevent overpressure.

The triplex pump is simple, gives a nearly constant flow of water, and at all speeds has about equal efficiency, ranging from 70 to 85 per cent. The first cost of a pump and motor, however, is higher than that of a duplex pump.

Methods of Driving Pumps

MOTORS are selected primarily because of plant conditions limiting the use of steam from auxiliaries. Because of the difficulty of regulating its speed to meet the varying capacity demands the electric motor is not selected when steam power is permissible. If any of the power plant auxiliaries are steam-actuated, the boiler feed pump should be one. The alternating current motor must be run at constant speed, and the direct current machines equipped with complicated control devices if the speed is to be varied considerably. This speed variation is essential in feed pumps.

For alternating current, the squirrel-cage induction motor is used. The starting current is high, but a feed pump continues in operation for a considerable time, hence the great starting current does not justify the use of a slip-ring motor.

On direct-current service a compound-wound motor is used. The series-wound is unsatisfactory because it runs away if the load is suddenly taken off, as when the pump becomes vapor bound or loses its suction. The shunt wound motor is valuable for some services on account of its constant-speed characteristic. The compound-wound motor speeds up under lessened load, but not to a dangerous extent; it will slow down if overloaded and thus furnish relief.

Steam turbines are used principally with centrifugal pumps, as the high speeds possible with this pump are met with a reduction of cost and floor space. Turbines are uneconomical at low speeds (400-600 r.p.m.). The water rates of the steam turbine and the direct-acting pump are compared in Table 37.

The turbine can be regulated closely to meet varying power demands. Its speed can be changed either manually or automatically, by throttling the steam supply.

Turbines should be direct-connected to a centrifugal pump. The turbine wheel and pump motor should be on one shaft, or a flexible coupling should be used.

Steam engines run at a maximum rotative speed of 500 to 600 r.p.m.; this is too low for direct drive to centrifugal pumps, which are too large and costly when driven at slow speeds. Belt-drive for centrifugal pumps is not desired, as the belt is always a source of trouble and renewal expense. Steam engines are susceptible to the same speed regulation as turbines, and give good economy.

Automatic Regulation of Pumps

THE regulating equipment for a feed pump consists of the pressure regulator at the pump, and of a feed-water control device at the boilers.

The pressure regulator maintains an even pump discharge pressure by throttling the steam, the speed of the pump being reduced so that with a throttling of the feed at the boilers, pressure in the feed-water lines is not increased.

The feed-control device is essentially a throttle valve in the feed line, which is opened or closed to vary the amount of feed water supplied to the boilers.

In steam-actuated pumps, the pressure regulator consists of a balanced valve, placed in the steam line to the pump, near the pump valve chest. The balanced valve construction is used to render operation easier and prevent sticking. The cylinder of a piston on the throttle-valve stem communicates with the feed-water line so that its pressure acts against the piston. When this pressure is increased, the stem is depressed, closing the valve and throttling the steam to the prime mover so that the speed is reduced. A spring or loaded lever on the valve stem opposes the action of the piston, thus balancing the water force. The spring can be adjusted to maintain any desired pressure in the water lines. A diaphragm can be used instead of the piston and water cylinder for simplicity and to reduce the cost.

The so-called *constant excess-pressure regulator* has the same elements as a constant pressure regulating valve. The discharge water pressure, however, acts on one side of the piston or diaphragm and the boiler steam pressure on the other. The spring or loaded lever is adjusted so that the difference between boiler and water pressure is maintained constant, and the excess pressure is just sufficient to force the feed water into the boiler.

This regulator is used with widely varying steam pressures to prevent the pump from discharging against too great a head when the steam pressure in the boilers is low. With a constant pressure governor, the water pressure must be sufficiently high to feed the boiler under maximum steam pressure. When the boiler pressure drops, the water pressure will be much greater than actually required, and the pump will be consuming more steam than necessary.

Positive displacement power pumps are regulated either by varying the speed of the prime mover, or by a by-pass control, which opens the discharge from the pump to the suction, allowing the water to circulate through the pump. A check valve prevents the water in the discharge line from flowing back into the pump.

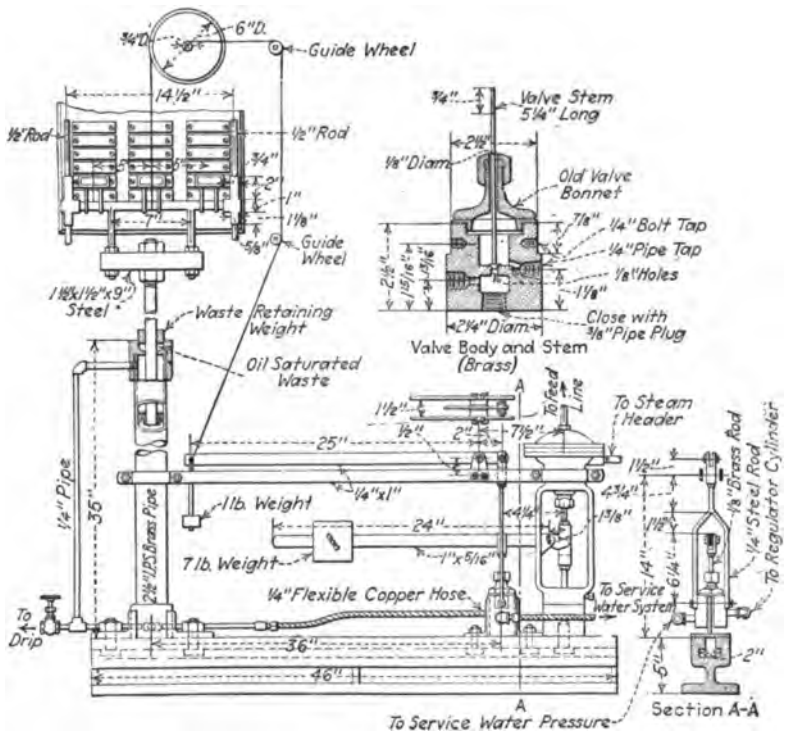

Fig. 161. Details of a Motor-Driven Pump Regulator.

These machines are usually belted to a constant speed source of power, or are motor-driven; the speed of the driver can be varied only when it is a direct-current or wound-rotor motor, and even then the control apparatus is likely to be unduly complicated.

The essential elements of a constant excess-pressure governor for a wound rotor motor-driven feed pump are described by *C. H. Sonntag* as follows: The regulator, Fig. 161, works on the follow-up motion principle, such as is used on steam steering engines. The base casting is made from

A part of the 8550 H. P. Installation of Heine Standard Boilers and Heine Superheaters in the New York Central Railroad Terminal, New York City. This Company operates 18,000 H. P. of Heine Boilers.

an old motor rail. The diaphragm chamber and parts below it are from a 1½-in. constant excess-pressure steam-pump governor. The motor used is of the wound-rotor type, and the three brush holders of the regulators, being in metallic contact with their supporting arm, short-circuit more or less of the resistance in the rotor circuit, according to their position on the face of the contact panel. The subdivisions of the rotor resistance are equal in the three phases, but corresponding sections of this resistance in the three phases are shunted successively instead of at the same time. This gives three times as many subdivisions of speed as there are contacts on the panel, and the result is smooth acceleration, with a speed for almost any rate of feed.

The regulator does not open the primary circuit of the motor, nor stop it, but it will bring the motor down to a low speed. The pump is fitted with a spring-loaded relief valve set above the working pressure, which acts as a safety device when the discharge line is absolutely stopped. The panel is so connected to the resistance that the lowest position of the brushes shunts all the resistance.

To start the pump and regulator, the valves leading to the upper and lower diaphragm surfaces are opened, also the one supplying service-water pressure to the follow-up. The drip valve should be open enough to let the plunger and the brush rigging down slowly when the follow-up valve is closed. The follow-up valve is then held open by raising the upper lever until the brushes are at the top of the panel and the primary switch is closed, when the motor will start slowly. The follow-up valve is released and the motor will accelerate up to the desired excess pressure. This is determined by the position of the 7-lb. weight on the lever arm, 15 lb. being about right for boiler feeding.

When the plant is small and steaming is steady, the pumps are started and run until there is a good level of water in the gage glass. The pump is stopped when the level begins to rise too high, and started again when the glass begins to show that the water level is below normal.

Centrifugal motor-driven pumps can be operated either with the by-pass or with the control described for the power pump. The capacity of centrifugal pumps drops off with an increase in head pressure; consequently the pump speed tends to be regulated automatically, and pressures cannot become dangerous. This characteristic is not so pronounced that a centrifugal pump is independent of regulating devices. The control is usually of the by-pass type, consisting of a safety valve which under a predetermined pressure opens up and allows the discharge to flow back to the suction. This pressure is above normal, but is lower than the shut-off or zero capacity head of the pump.

In steam-actuated pumps the control is simpler, since the speed can easily be changed by throttling the steam supply. With this method, power is not wasted by circulating water through the pump, and the pump is not constantly being stopped and started again. The supply is throttled by utilizing the rise and fall of water in the boilers, hot well, or open heater.

Feed Water Regulators

THE *feed-regulator* throttle-valve in the *feed lines* is controlled by the water level in the boiler steam-drum or in the hot well. The hot well level is used principally in marine service, and calls for operation on a closed circuit. The amount of water (in the form of liquid or steam) must be correct, therefore, in the entire system,—water lines, steam lines, and boiler.

Regulators governed by the water level in the steam drum are of the continuous-feed type, in which the feed water flows at all times and the rate

of flow is regulated in accordance with the water level in the drum; or they are of the intermittent-feed type, and the water is fed or not fed, as the level falls below or exceeds a predetermined point in the steam drum.

The continuous-feed regulator is designed to give even steaming and close regulation with slight danger of the water level dropping to a dangerous point. The water in the drum is not cooled off suddenly by the addition of large quantities of water, but feeding is continuous so that steam can be generated uniformly and most economically.

One intermittent-feed regulator contains a vertical expansion pipe, the top of which is connected with the steam drum at the normal water level: the bottom of this pipe is connected with the steam drum below the normal water level. As the water level in the drum falls, it also falls in the expansion pipe. Steam is then admitted to the pipe, thus increasing its temperature, since the water in the pipe is cooler than the steam. This increase in temperature expands the pipe and causes a motion that is transmitted to the feed-water valve-stem. The valve is thus opened and more water admitted. When water rises in the steam drum, the level also rises in the expansion pipe. The temperature of the expansion pipe is reduced, and the pipe contracts, closing the feed valve. Fig. 162 shows the design of this intermittent regulator.

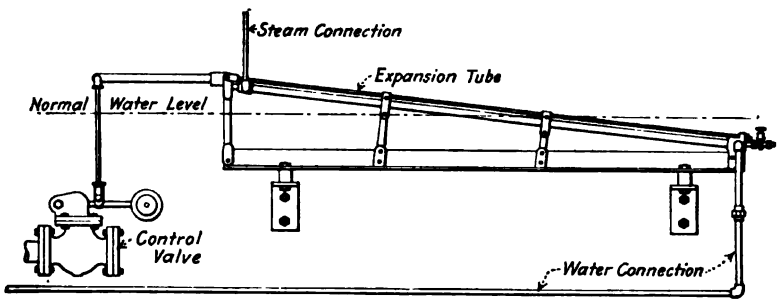

Fig. 162. Copes' Feed Water Regulator.

In another type of intermittent regulator, a rise of water in the steam drum or water column above the normal is followed by the overflow of the water into a trap, thus opening it. Steam is then admitted to the pressure chamber of the feed valve, which is promptly closed. When the water level falls below the normal, the trap automatically closes. The pressure chamber of the feed valve exhausts into the hot well.

Feed regulators of the continuous type take into account the rise and fall of water in the gage glass, due not only to the quantity in the drum, but also to the change in density of the water in the steam drum. When the boiler load is increased suddenly, steam is generated more rapidly and the steam pressure drops. More steam bubbles will rise through the water in the drum, thus decreasing the density of this water. The density in the gage glass remains unchanged. Hence the level in the gage glass rises more slowly than does the water level in the drum, until the increased rate of

steam generation causes it to fall. The water level in the gage glass then falls, and the rate of feeding is increased in response, to maintain an even level in the glass.

When the load falls off suddenly, the steam pressure is increased; this is followed by a less rapid generation of steam and a reduction in the amount of steam bubbles rising through the water space. The density of the water in the drum is increased. while as before, the water level in the gage glass falls more slowly than does that of the level in the drum. When the evaporation is less rapid, the water level in both the steam drum and gage glass is ultimately raised; and the rate of feeding is reduced. Consequently rise and fall due to density changes and changes in level due to variation in the rate of evaporation, do not occur simultaneously.

This lagging action is used in some continuous-feed regulators, which provide a strong feed during the decreasing load and lessen the feed rate in proportion to the evaporation rate when the load is increasing rapidly. Under decreasing load the furnace heat is thus stored, and is not wasted or discharged to the flues. When the load is increasing, the rate of feed is not increased greatly but is kept as low as is consistent with safety. The furnace can then be used to generate steam instead of to heat large quantities of feed water.

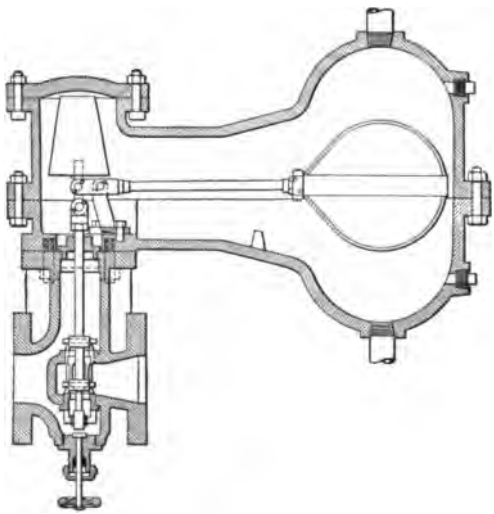

Fig. 163. Continuous Regulator of Float Type.

In still another type, Fig. 163, a float normally rests upon the water in a chamber installed at the level of the water in the boiler drums. The rising and falling of the float is communicated to the throttle valve and thus regulates the feed continuously. The float can be partly filled with a volatile liquid, which expands because of the temperature changes in the float chamber. This expansion tends to equalize the external pressure on the float, due to the steam. The feed control valves used with the float are placed inside the regulating chamber, so that there are no outside stuffing boxes to be packed.

Good Samaritan Hospital, Cincinnati, Ohio, equipped with Heine Standard Boilers.

Location of Feed Pumps

FOR cold water service, that is, water at 60 to 70 deg., feed pumps give satisfaction with a suction lift as high as 15 feet. Generally, however, the suction lift of the feed pump is decreased by the temperature of the water.

The atmospheric pressure which is equivalent to a head of 34 feet of water, forces the water into the pump. In practice, deductions must be made for the loss of head at the pipe entrance, pipe friction, valve friction, acceleration of water to its highest velocity, and pressure necessary to prevent vaporization of hot water. For example:

Entrance loss, say	2.0 feet
Suction pipe friction	2 5 feet
Acceleration, or velocity head	2.0 feet
Pressure to prevent vaporization at 120°	3.9 feet
Assumed lift	15.0 feet
	25.4 feet
Available head for lifting suction valves and as a factor of safety for contingencies	8.6 feet
Total	34.0 feet

The velocity head of 2 ft. is a typical figure for a centrifugal pump, in which the water velocity through the eye of the impeller will be about 12 ft. per second.

Fig. 164 shows curves of suction lift or suction head for different water temperatures. The right-hand curve represents theoretical conditions as in the steam tables, or the pressure to prevent vaporization of the water. The curve in the middle represents the maximum suction lift or maximum suction head. For ordinary piping, the left-hand curve should be used.

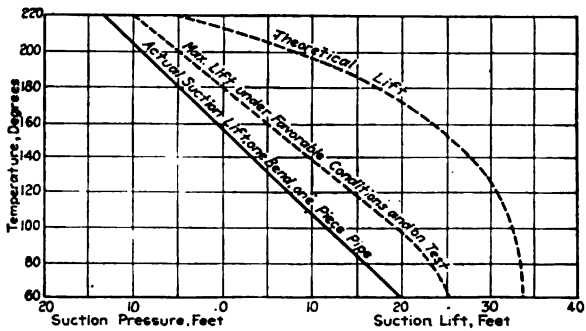

Fig. 164. Suction Lift or Suction Head at Different Temperatures.

If the capacity is too high for a pump or suction pipe handling hot water the velocity head will be increased and the water handled will be vaporized. If the suction pressure is too low, or the lift is too high, the hot water will be vaporized. Vaporization causes knocking in the discharge lines and greatly reduces the capacity and efficiency of a direct-acting pump. The capacity will also be decreased with centrifugal pumps, since the water passages will be filled partly with vapor and partly with water.

The effect of temperature on capacity is shown by a test of a centrifugal boiler feed pump, due to *John Howard*. This was a 3-in. three-stage pump, designed for 150 gal. per min. against 195 lb. pressure, and was driven at 3000 r.p.m. by a steam turbine. The water was measured by a flow meter, which was afterward calibrated and found correct.

The capacity test (see Fig. 165) gave the results for a constant head and for constant speed. The first curve was obtained by the use of a pump governor, and the second when the governor was cut out, the capacity being varied by throttling the discharge.

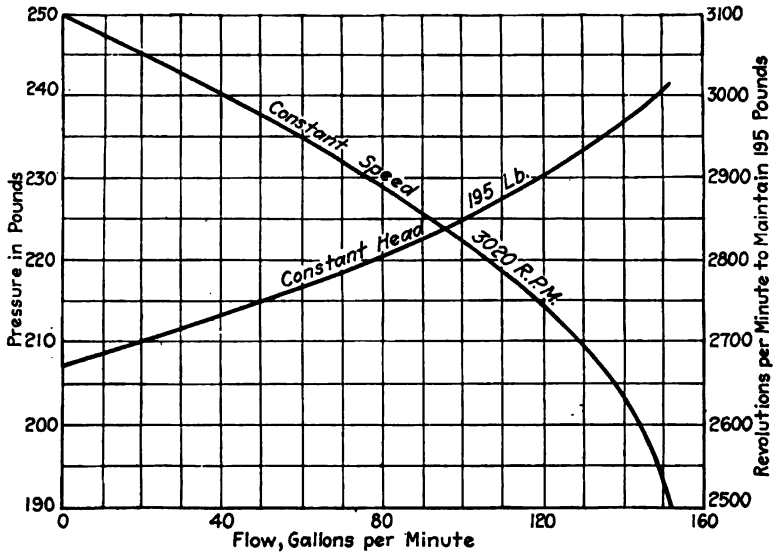

Fig. 165. Capacity Test for Hot Feed Water at Constant Speed and Constant Head.

In making the temperature-capacity test (Fig. 165) the temperature of the water in the open heater from which the pump took its suction was varied by controlling the amount of steam passing into it. The great variation was undoubtedly due to the extremely small head (only about 30 in. above the center-line) on the suction side of the pump. Because of this small head, the guarantee was only for 180 deg., but by speeding up the pump water at 190 deg. could be safely handled.

The suction lift should be kept low or the suction pressure high in accordance with Fig. 164. The suction pipe should be as direct as possible with no unnecessary elbows or valves. The suction piping should be of generous size; a velocity of 2 ft. per second should not be exceeded for hot water.

Suction pipes should be accessible for inspection and arranged so that valve spindles can be repacked easily. Particular care should be taken to avoid leaks in the suction pipe. These do not show directly on the discharge side, although they are sometimes indicated by a "jump" of the pump at the start of every stroke.

With long lines or deep lifts, the line and pump can be kept "primed" by a check or foot valve at the bottom. With long suction lines, more particularly with single cylinder pumps, an air vessel should be fitted on the line, to prevent knocking.

Injectors as Boiler Feeders

INJECTORS are made in many forms, but Fig. 166 shows the typical arrangement and illustrates the method of operation. Steam is admitted through the valve M, by turning the handle K, and enters the expanding nozzles where the pressure is reduced and the velocity greatly increased. The steam jet is then guided to the contracting nozzle or lifting tube V. In passing from the first to the second nozzle it carries along the air in the chamber and creates a vacuum. The water to be pumped rises in the suction pipe and fills the chamber. The steam and water thus enter the lifting tube, passing to the mixing nozzle C, and the steam is condensed. When the water and steam have reached the delivery nozzle D the steam has been condensed and the water is traveling at a high velocity imparted to it by the steam. The delivery nozzle is increased in cross-sectional area, reducing the velocity and hence increasing the pressure of the water. Consequently its head is sufficient to overcome the resistance of the feed valve, and the water enters the boiler. The steam has thus imparted kinetic energy to the water; this energy is converted from velocity to pressure in the delivery nozzle. The water is heated through the condensation of the steam.

The action of the injector depends not only upon the impact of the jet of steam, but also upon its efficient and complete condensation, which must occur during its passage through the combining tube. At 180 lb. boiler pressure the water must attain a terminal velocity of 163 ft. per sec. to balance the pressure, and something more to lift the check valve and enter the boiler. If the total length of the converging combining tube is 7½ in., the interval of time during which the steam can be condensed is only 0.008 of a second and the acceleration is 4 miles per second per second.

Anything that tends to diminish rapid condensation operates against mechanical efficiency. An increase in the temperature of the water supply, moisture or superheat in the steam; all tend to reduce the proper ratio between the weight of the water delivered into the boiler and that of the motive steam. The steam must undergo instant and complete condensation, and its velocity must reach a maximum at the instant of impact with the water.

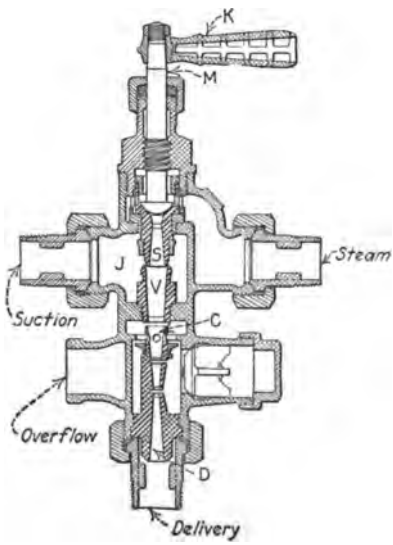

Fig. 166. A Boiler Feed Injector.

Lytton Building, Chicago, Ill., containing 1500 H. P. of Heine Standard Boilers.

Experiments with saturated steam prove that the flow is in accord with the well-known formula based upon adiabatic expansion. The velocity of superheated steam is slightly higher as it follows the law of a perfect gas until condensation due to expansion begins; the velocity of the combined jet would consequently be increased, but this advantage is overbalanced by the shorter interval of contact and condensation, during which the additional heat in the steam must be abstracted. Consequently the mechanical efficiency is lowered. To obtain good results with superheated steam, the injector tubes and nozzles must be specially designed.

The practical effect of superheated steam upon the action of an injector is to reduce the maximum capacity, increase the minimum capacity, and to lower the limiting temperature of the water supply with which the injector can operate. Further, with high pressure and superheat, an inefficiently designed instrument is inoperative. It is therefore advantageous and usually practicable to supply the injector with saturated steam through a special pipe.

The steam pressure range over which an injector will work depends upon the distance between the steam nozzle and the lifting tube. With a fixed distance between these two points the injector will operate only with a pressure range of about 75 pounds. If the injector is designed for 175 lb. maximum pressure the minimum steam pressure under which it will operate will be 100 pounds. After the maximum and minimum pressures are passed the ratio of steam velocity to quantity of water for complete condensation of the steam is not correct. The injector can be operated only by throttling or opening its suction line, or by varying the distance between the steam and lifting nozzles.

Commercial devices are supplied to render the injector operative over a wider steam pressure range. In one type a half turn of the valve handle allows the nozzle to remain in one position so that the pressure range is 90 or 100 lb. maximum. A full turn of the handle changes the position of the nozzle, giving a higher range of steam pressures, 100 or 175 pounds. The action of this type is indicated in Table 39.

Table 39. Steam Pressures at Lifting Nozzles of Injectors.

Lift, Feet	Feed Water at 72 Deg.		Feed Water at 100 Deg.	
	Start	Works up to	Start	Works Up to
Not lifting	20	160	25	125
2	25	150	26	120
8	30	130	33	100
14	42	110	55	80
20	80	85	....	....

Another injector has a double set of nozzles; the first lifts the water and delivers it to the second, which acts as a forcing nozzle to deliver the water to the boiler. The capacity of this type can be changed by varying the amount of steam admitted to the lifting nozzle. The quantity of water varies directly with the steam pressure at the lifting nozzle; this reduction in water is desired for the proper functioning of the forcing nozzle. Any change in steam pressure or in quantity of water to condense the steam thus affects both nozzles, so that pressure changes require no hand adjustment. This type has operating characteristics as indicated in Table 40.

Table 40. Steam Pressures at Lifting Nozzles of Injector.

Lift, Feet	Feed Water Temperature							
	72 Deg.		100 Deg.		120 Deg.		140 Deg.	
	Start	Up to	Start	Up to	Start	Up to	Start	Up to
Not lifting	25	350	25	265	35	230	35	140
2	25	300	30	265	35	230	.....	.....
8	35	270	40	235	45	205	45	110
14	45	240	50	210	55	140	.....	.....
20	65	185	70	155	65	120	.....	.....

Another type, commonly called an inspirator, Fig. 167, has two nozzles, but the steam pressure cannot be adjusted at the lifting nozzle. The lifting and forcing nozzles receive steam from separate openings, so that the steam pressures can be adjusted separately through valves in the steam lines.

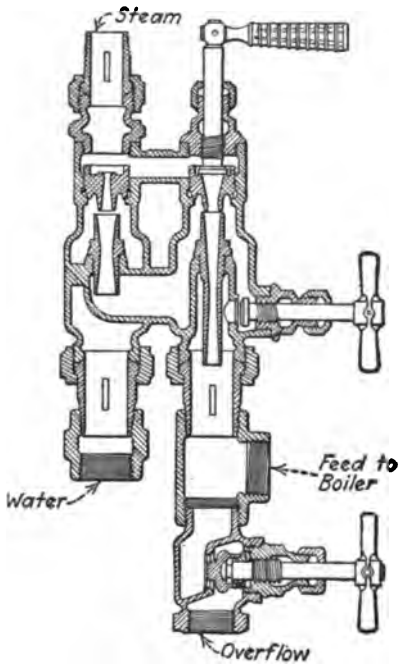

Fig. 167. An Inspirator Type Injector.

In all injectors a check valve is placed in the mixing chamber, with openings into the mixing nozzle, so that in starting, before water is drawn into the mixing tube to condense the steam, the mixture of steam and air can escape to the atmosphere. When the steam is condensed a partial vacuum is formed in this chamber and the check valve automatically closes, opening only when condensation fails.

The thermal efficiency of an injector, considered as a pump only, is about 2 per cent. As a combined pump and feed-water heater the thermal efficiency is nearly 100 per cent, the only heat of the steam not returned to the boiler being a small percentage lost by radiation. If the exhaust steam available for feed-water heating is not sufficient to heat the water above its limit possible with the injector, the latter is a good feeding apparatus. On the other hand the injector is not so economical if it interferes with the economic use of exhaust steam in the plant. It is rarely installed as the main feed unit, unless in small plants where a feed pump might not receive attention. The injector, however, is so reliable, compact and inexpensive that it almost always is placed in the boiler room as an auxiliary feed device, to be used should the main feed pumps become inoperative.

Many plants operate at high over-all economy during the heating season when all the exhaust steam is utilized, but decrease their economy when the exhaust is wasted to the atmosphere. Extra exhaust, winter or summer, can be used to feed the boilers by means of an exhaust steam injector. The heat taken from the boiler in the form of steam is nearly all returned at once by the live-steam injector, but the exhaust-steam injector returns heat to the boiler that is about to escape through the engine exhaust pipe. The water so condensed is free from scale-forming matter, but all oil should be removed from the exhaust steam. Restarting an exhaust-steam injector is not difficult when the water flows to it under pressure or live steam is available.

Air entering the injector will always cause a "break," so that unusual care should be taken to avoid leaks in the suction pipe. With some waters trouble is caused by scale in the lifting, mixing and discharge nozzles; this is probably due to evaporation to dryness of water remaining after a stop.

Economy of Feed Water Heating

THE principal function of a feed water heater is to utilize the heat from exhaust steam or flue gases, which would otherwise be wasted. The per cent of saving effected by heating the feed water may be expressed by the following formula:

$$\text{Per cent saving} = 100 \frac{t_2 - t_1}{H - (t_1 - 32)} \qquad (28)$$

where t_1 = the temperature of water entering the heater, t_2 = the temperature of water leaving the heater and H = the total heat above 32 degrees per pound of steam at the boiler pressure.

Feed water heating results in the further advantages: first, of increasing the steaming capacity of the boiler by eliminating the heat required for heating the feed water; second, by its action as a purifier certain scale-forming ingredients in the feed water are removed; and third, by feeding water into the boiler drum at or near the steam temperature the tendency of setting up temperature strains in the boiler metal is eliminated.

Classification of Feed Water Heaters

HEATERS may be classified into three main groups, viz: closed heaters, open heaters and economizers. Open or closed heaters may utilize exhaust or live steam, while economizers utilize the waste heat in the exit flue gases. The selection of one or more of these types of heaters will depend largely upon conditions at the particular plant in question.

Open heaters may be of three different types. In the one type, generally known as the live steam purifier, live steam is used to heat the feed water up to a temperature of approximately 300 degrees in order to precipitate out

Technical High School of Jersey City, N. J., containing Four 265 H. P. Heine Standard Boilers.

such scale-forming elements as the sulphates of lime and magnesia. The use of the live steam purifier should be confined to those plants where the feed water contains sulphates.

A second type of open heater is designed for the use of exhaust steam at atmospheric pressure or less, while the third type is designed for the use of exhaust steam at back pressure up to 10 or 20 lbs., depending upon the back pressures on the auxiliary engines and pumps.

In the open heater, Fig. 168, steam enters the opening of the shell on one side, near the top, and passes through an oil separator into the mixing chamber. The cold feed water enters at the top of the shell, and passes over and through a set of perforated trays, where it is broken into fine

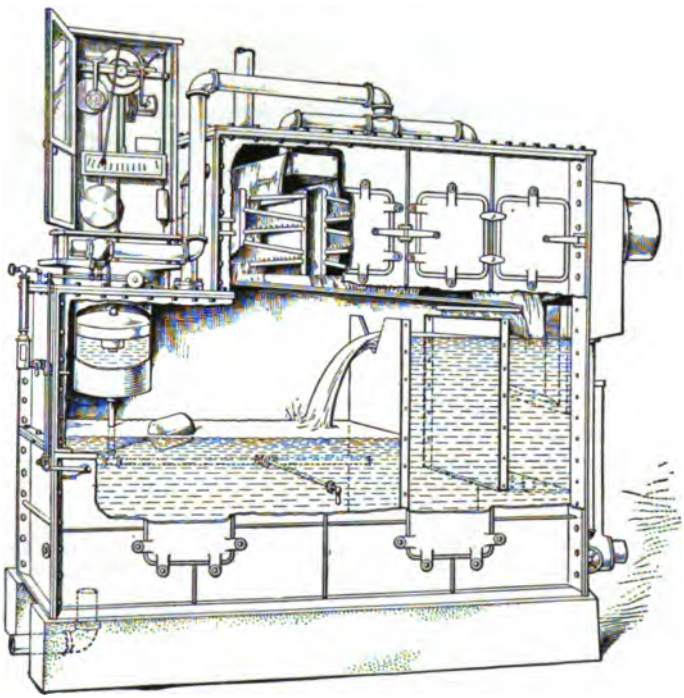

Fig. 168. Cochrane Metering Open Feed Water Heater.

particles, to insure thorough and intimate contact with the steam. The mixing of steam and water condenses the steam and the mixture, or hot water, falls to the bottom of the shell through a bed of filtering material. A float controls the amount of water entering the heater so that a constant water level is maintained at the bottom. An overflow provides against the water level rising too high in the shell and backing up into the exhaust steam lines, should the float control become inoperative.

Since the heat given up by the steam, plus the losses due to radiation, must equal that gained by the water, the amount of steam to raise a given amount of water to a desired temperature, is easily calculated, as is also the resulting

feed-water temperature, when the amounts of steam and water are given. The radiation losses can be made negligible with proper insulation, so this factor is eliminated in the formula:

$$(t_2 - t_1)\ W = (H + 32 - t_2)\ S$$

$$\frac{S}{W} = \frac{t_2 - t_1}{H + 32 - t_1} \tag{29}$$

t_2 = Temperature of water to boilers (hot)
t_1 = Temperature of water to heater (cold)
H = Total heat of steam at back pressure conditions, B.t.u.
S = Weight of steam, pounds
W = Weight of water, pounds.

The heat of the liquid at the two temperatures should be used for exact calculations, but the foregoing is sufficiently accurate for commercial purposes.

In selecting an open heater, the following features should be considered:

1. *Size.* The heater must have sufficient steam space and tray area.
2. *Oil Separator.* This is necessary if exhaust steam contains oil, as when reciprocating-engines or pumps exhaust into the heater. Oil must be efficiently separated and drained off.
3. *Filter Bed.* This is frequently omitted.
4. *Hot Well,* or space at bottom must be ample so as to act as a settling basin and reservoir for the feed pump. Vapor vent should be provided for escape of air and vapor. (Hot well can also be used as a purifier space.)
5. *Regulating Valve* is necessary to maintain proper water level in the shell.

The design should also be considered in the light of its applicability to plant requirements.

That part of the heat so used which is not converted into work is returned to the boiler instead of being rejected to the condenser circulating water, giving the maximum thermal efficiency.

In one heater an indicating and recording mechanism is supplied to measure the feed water, so that the quantity can be checked closely and the heat balance and performance easily calculated. These devices are valuable in order to maintain a running check on performance.

When the exhaust steam pressure is above atmosphere, exhaust valves are used on the heater or exhaust steam lines. These allow the steam to be exhausted to the atmosphere or to the low pressure end of the main turbine. In one valve a nest of spring-loaded relief valves performs this function. These valves have individual dash pots. The action with them is smoother and less likely to stick than with one large valve. The tension of the valve springs can be regulated by a handwheel from outside the valve. The high back pressure that may be required in the morning to run the heating system can be decreased in the afternoon when the buildings have been warmed.

A thermostat can be attached to a heater to control the drives of auxiliaries. These can be arranged for double drive, with motor on one side and turbine on the other. When too much steam is exhausted to the heater the pressure in the exhaust lines is raised, and the temperature is increased. The thermostat then operates to throttle the turbine, and more of the load is taken by the motor. Thus less exhaust steam is supplied, and the excess of steam is reduced in proportion. When the supply of steam in the heater is insufficient, the pressure in the exhaust line drops, the temperature is reduced and the thermostat permits more steam to flow to the turbine. The turbine then picks up the load and furnishes more steam to the heater.

Relief valves can be used to bleed steam from one of the low pressure stages of the main turbine and lead it to the heater during periods of low pressure in the exhaust line. A high feed-water temperature is thus maintained.

Closed feed water heaters may be grouped into two classes, steam tube and water tube. Those in which the steam passes through tubes and the water is contained in the heater shell are known as steam tube types, while those in which the water flows through the tubes and the steam is contained in the heater shell are classified as water tube types. Steam tube and water tube heaters may operate on the parallel current or counterflow principle, and they may be designed so that the steam or water makes one pass through the heater (single flow), or so that the steam and water may make several passes (multi-flow).

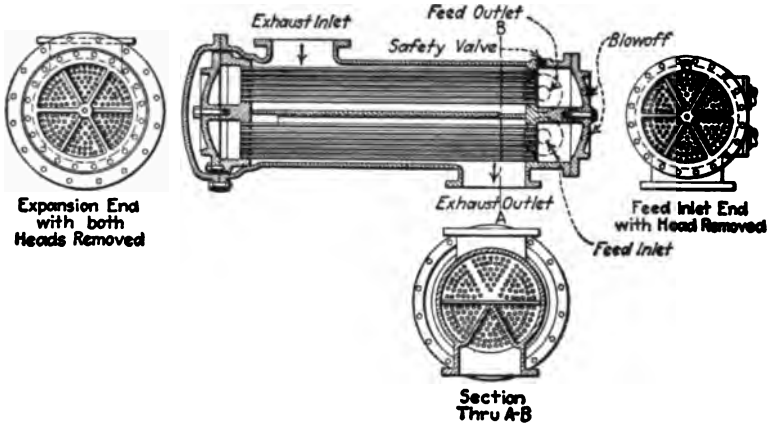

Fig. 169. Closed Feed-Water Heater.

Fig. 169 illustrates a typical closed water tube feed-water heater of the multi-flow type. Water is circulated in six passes to insure maximum heat transfer from steam to water. The number of passes varies, but two is the usual practice. Tubes are secured to tube sheets by screwing, welding or expanding. In some designs each tube is packed with ferrule glands, to simplify replacements.

The floating head construction provides for expansion and contraction of the tubes under varying temperatures. This feature is important when straight tubes are secured rigidly at each end to the tube sheet.

Most closed heaters are arranged so that they can be installed either vertically or horizontally, as best suits the space and piping.

The Patterson-Berryman closed feed-water heater, illustrated in Fig. 170, is of the water tube type. The water makes a double pass through inverted U-tubes, while the steam passes through the body of the heater. A chamber at the bottom, provided with a blow-off connection, serves as a receptacle for the collection of scale, sediment, etc.

In one heater, Fig. 171, coiled water tubes are connected to the top and bottom water headers with special leakproof unions. The coils allow for expansion and contraction of the tubes and present maximum heating surface. This type is of the one-pass design, water entering at the bottom header and leaving from the top. Tubes are examined or repaired through a door in the front of the shell.

Hudson County Court House, Jersey City, N. J., containing four 250 H. P. Heine Standard Boilers.

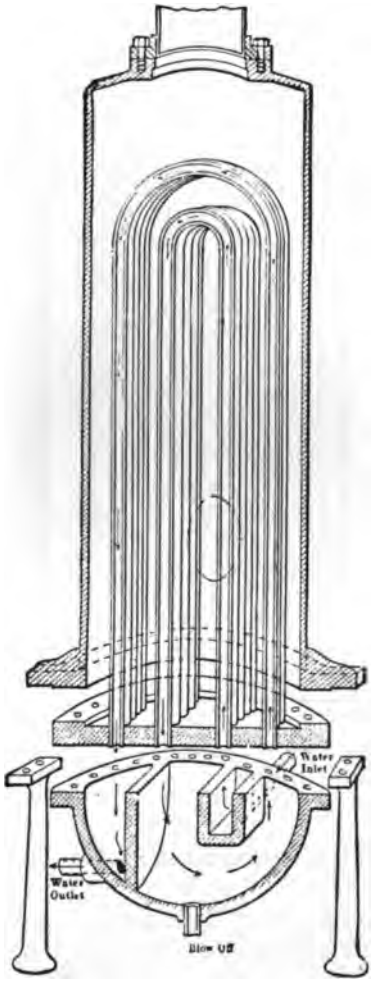

Fig. 170. U-Tube Feedwater Heater.

Open or Closed Heaters

THE general construction of the power plant usually determines the type of heater. In marine service, for instance, because of space limitations and the rolling of the ship, closed heaters are usually installed. Open heaters adapted to this service are in general use, however, by the English mercantile marine. In ice plants the closed heater might be preferable, since the condensed steam would be available for ice-making; on the other hand, much better ice is made with the open heater, because it acts as a reboiler, driving off the air and other gases, which purge off through the vent. With closed heaters this air passes through the heater into the boiler and engine. A greater amount of boiling is then required in the reboiler, with greater waste of steam. Vacuum reboilers are sometimes found inadequate, and the capacity must be increased by the use of atmospheric reboilers.

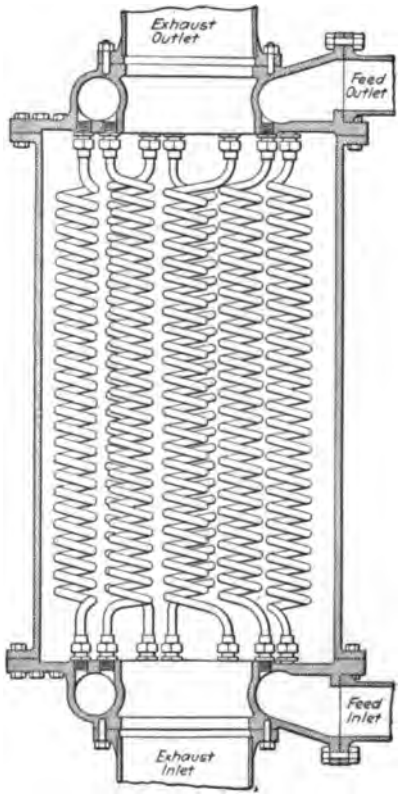

Fig. 171. Multi-tubular Feedwater Heater.

The two types are compared in the following tabulation:

Open Heater	Closed Heater
Efficiency	
With sufficient exhaust steam for heating, the feed water can reach the same temperature as the entering steam.	The maximum temperature of the feed water will always be several degrees lower than the temperature of the steam.
Scale and oil do not affect the heat transmission.	If the scale or oil are deposited upon the tubes, heat transmission is lowered.
Pressures	
It is not ordinarily subjected to much more than the atmospheric pressure.	The water pressure is slightly greater than that in the boiler, when the heater is placed on the pressure side of the feed pump, as is customary.
Can be made, however, for back pressures of 15 lb. or more.	

Safety

If the heater is to be used with a back pressure, a good valve, preferably with more than one disk, should be fitted. Otherwise, the back pressure valve might stick and blow up the heater.

It will safely withstand any ordinary pressure. However, any shut-off valve in the feed line should be placed between the feed pump and the heater, with a check valve between the heater and the boiler.

Purification

Since the exhaust steam and feed water mingle, provision must be made to remove the oil from the steam.

Scale and other impurities precipitated in the heater are easily removed and do no harm.

The oil does not come in contact with the feed water.

Scale is removed only with difficulty.

Corrosion

The open heater prevents corrosion by driving out oxygen originally dissolved in the water.

With the closed heater the oxygen is not discharged and corrosion of piping and boilers occurs.

Location

Must always be placed higher than the pump on the suction side. The greater the vertical distance between the pump and heater, the better.

May be placed anywhere on the pressure side of the pump.

Feed Pumps

With supply under suction two pumps are necessary and one must handle hot water.

Only one cold-water feed pump is necessary.

Adaptability

Particularly adaptable for heating systems and wherever the returns are piped directly to the heater.

Adapted to use in small space, and when condensate of exhaust steam can be used in process work.

Economizers

THE economizer is a closed feed-water heater utilizing the hot waste gases of combustion. As a piece of apparatus for the promotion of boiler room economy, the economizer is rapidly gaining favor, due to increasing prices of fuel, and to the large stack losses inherent with the present practice of forcing boilers to high ratings.

Two types of economizer may be met in practice, one in which the economizer is an integral part of the boiler and the other in which it is an independent unit. When an economizer forms an integral of a boiler its design is generally such that steel tubes, headers and drums have to be used. Inasmuch as there is extreme liability for corrosion due to the condensation of moisture or sweating of the outside of economizer tubes, cast iron should be used rather than steel, due to its lesser tendency to fail by corrosion, unless there is some special method taken to prevent the corrosion of the steel.

Fig. 172 illustrates one widely used type of independent economizer. It consists of vertical cast iron tubes, which are arranged in sections in the flue leading from boiler uptake to stack. When in position the sections are composed of bottom and top headers into which the tubes are pressed, a metal-to-metal joint being formed. The top and bottom headers of the sections are connected to branch pipes, one extending lengthwise at the top of the economizer and the other extending lengthwise at the bottom. Both top and

Hotel St. Regis, New York City, operating 1450 H. P. of Heine Standard Boilers.

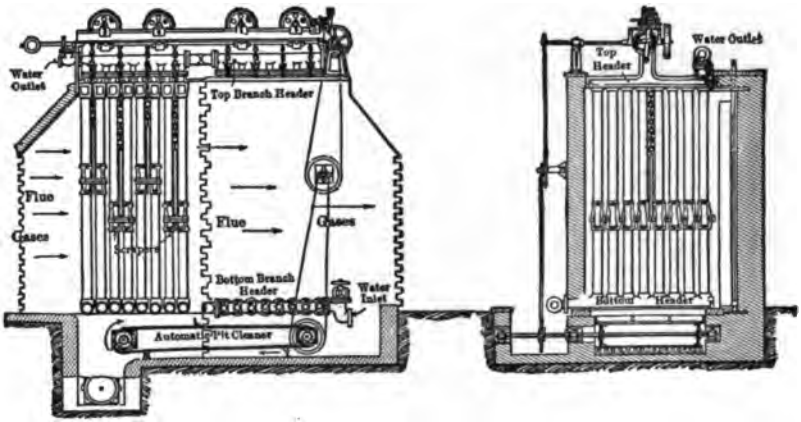

Fig. 172. Green Fuel Economizer.

bottom branch pipes are located accessibly outside of the economizer setting or casing. The feed water enters the economizer through the lower branch pipe nearest the gas outlet of the economizer and leaves through the upper branch pipe nearest the point where the flue gases enter the economizer from the boiler.

Either mechanical soot blowers or mechanically operated scrapers may be used for cleaning the external tube surfaces. If scrapers are used, their operating mechanism is generally placed on the top of the economizer. The motive power for scraper operation may be supplied from some convenient line shaft or by individual motor or engine.

Blow off valves and safety valves must be provided with economizers. For flexibility and continuity of boiler operation it is desirable to have a by-pass flue from boiler uptake directly to the stack. Inasmuch as gas explosions sometimes occur within economizer settings, it is desirable to provide quick opening explosion doors therein.

Economizer Performance

THE stack gases in a boiler indicate the amount of heat available for feed-water heating. Table 41 gives roughly the heat content of the gases of combustion in the flues and uptakes.

If the fuel has a heat value of 10,000 B.t.u. per pound, the stack gases are at 500 deg., and the stoker is of the overfeed type, then Table 41 shows that the heat in the stack gases will be about 18.2 per cent, or 1820 B.t.u., for every pound of fuel consumed in the furnace. The difference between the heat in the gases entering and leaving the economizer represents the saving. In the example just mentioned, if the gases leave at 350 deg., they contain 12 per cent of the heat in the fuel; the economizer then saves 6.2 per cent.

The economizer is most useful, therefore, when the heat of the stack gases is greatest in proportion to the heat of the fuel or when the losses would ordinarily be the greatest; as with an overloaded boiler, hand-fired or having an overfeed stoker and draft. The overload on the boiler will be indicated by high stack temperature. As is shown by Table 41 with normal load and efficient firing, the stack losses may not be sufficient to warrant the expense of an economizer. The stack gases will not heat the feed water appreciably, unless the economizer is large and costly.

Table 41. Heat of Fuel (in Percent) Present in Flue Gases.

Flue-Gas Temperature, Degrees	Underfeed Stoker, Forced Draft	Overfeed or Natural Draft Stoker	Hand Firing, Natural Draft
Air per lb. of combustible, lb.	18	24	30
300	....	....	12.4
350	....	12.0	14.9
400	....	14.0	17.4
450	12.2	16.1	20.0
500	13.8	18.2	22.6
550	15.4	20.3	25.2
600	17.0	22.4	27.8
650	18.5	24.4	30.4
700	20.1	26.5	....
750	21.7	....	....
800	23.2	....	....

The method of calculating economizer performance is given by *A. B. Clark* as follows: Assume that the economizer is to be so proportioned that the combined efficiency of both boiler and economizer will be 80 per cent, the coal containing 10,000 B.t.u. per pound. The steam has a pressure of 250 lb. gage, and 250 deg. of superheat, the feed water entering the economizer at 100 deg. The heat contained will then be 1340 B.t.u. per pound of steam. The feed water contains 68 B.t.u., so that the heat given up by boiler and economizer is 1272 B.t.u. per pound of steam. As the efficiency is 80 per cent, 8000 B.t.u. of the 10,000 B.t.u. in each pound of coal is used, and the evaporation is 8000 ÷ 1272, or 6.3 lb. of water per pound of coal.

Allowing for excess air and infiltration of air, about 12.25 lb. of flue gases will be produced per pound of coal burned. If the radiation loss is neglected, the heat given up by the flue gases must equal the heat absorbed by the water; that is, the product of the specific heat, weight and drop of temperature of the flue gases must equal the product of the specific heat, weight and rise of temperature of the water.

Let *tg* represent the drop of temperature of the flue gases and *tw* represent the rise of temperature of the water. Then

$$0.24 \times 12.25 \times tg = 1 \times 6.3 \times tw$$

$$\frac{tg}{tw} = \frac{1 \times 6.3}{0.24 \times 12.25} = 2.14$$

This means that for every degree of temperature increase of the 6.3 lb. of water, the 12.25 lb. of flue gases will drop 2.14 deg. in temperature.

The water passing through the economizer is taken as 100,000 lb. per hour, which the boiler, it is assumed, can evaporate. The temperature of the gases leaving the boiler is taken as 600 degrees.

The average temperature difference between the water and gases in the case assumed above is 484.3 degrees. Tests on economizers show that the rate of heat transfer from gas to water is about 5.5 B.t.u. per square foot of surface per hour per degree temperature difference between the gases and the water, when the economizer is proportioned for a gas flow of 5,000 lb. per hour per square foot of area. It will be 4 B.t.u. per square foot if the flow is reduced to 3,000 lb. per hour and in proportion between these two points.

The water usually flows through all of the sections in parallel. With long, narrow economizers and where the gases have a large drop in temperature the economizer is sometimes subdivided into groups, through which the water is passed in series, progressing in a direction counter to that of the

gases, thus obtaining a greater total transmission of heat according to the counter-flow principle. The individual sections can also be connected in series, but this complicates cleaning and blowing down.

The transmission coefficient varies with the mean gas temperature as shown in Fig. 173, due to *Geo. H. Gibson.* The rate of heat recovery by the

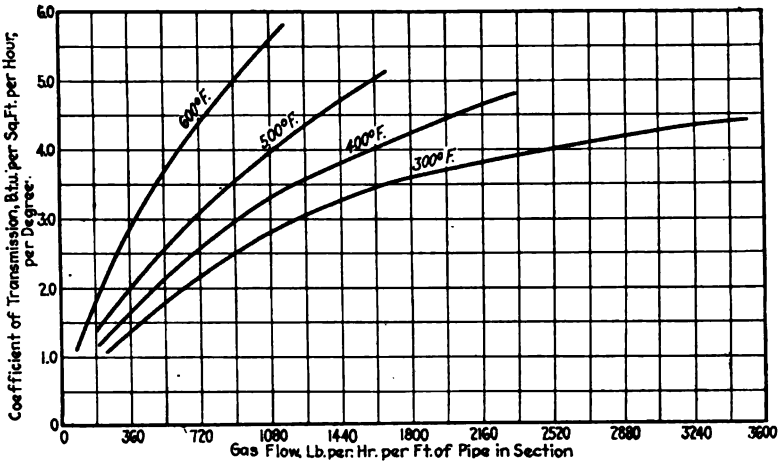

Fig. 173. Variation of Coefficient of Transmission with Mean Gas Temperatures.

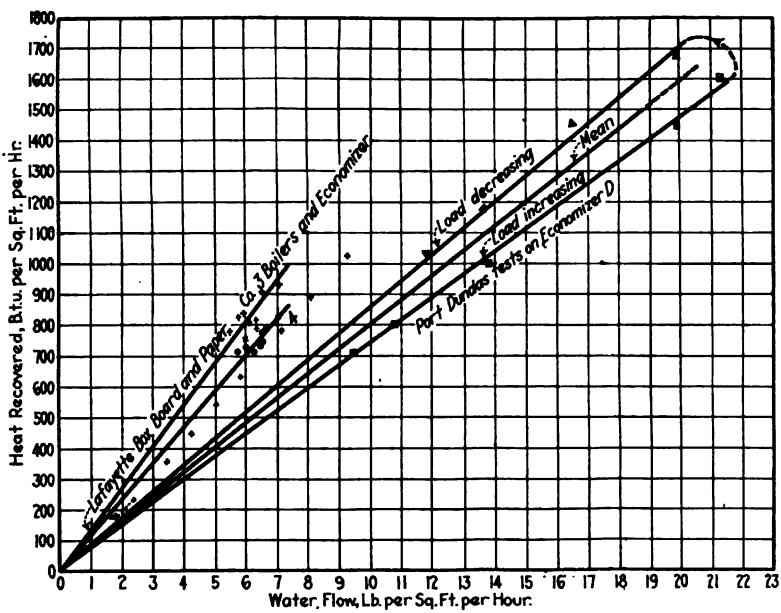

Fig. 174. Variation of Rate of Heat Recovery by the Economizer.

1400 H. P. of Heine Standard Boilers equipped with Murphy Stokers, in the Fifth Avenue Building, New York City.

economizer increases directly as the load on the boiler to which it is connected. This is shown by Fig. 174, also due to *Geo. H. Gibson*. The heat recovery while the load is increasing appears to be somewhat less than while it is decreasing, owing to the fact that the rate of heat recovery can be determined only by measuring the temperature of the water as it leaves the economizer.

Using the higher value for calculation, the heat transfer per square foot per hour is 5.5 × 484.3, or 2663 B.t.u. Therefore the surface required to raise 100,000 lb. of water through 10 deg. is 100,000 × 10 ÷ 2663 = 376 sq. ft. The next step is to assume new values for gas and water temperatures and calculate the surface required.

Table 42. General Dimensions of Economizers.

No. of Tubes Wide	Length of Tubes, Feet	Weight of Section Full of Water, Pounds	External Heating Surface, Square Feet per Section	Number of Sections in Economizer	Length Over Economizer Ft.—In.
4	9	1,636	51.0	4	2— 5
4	10	1,756	55.8	8	4—10
4	11	1,877	60.7	12	7— 3
4	12	2,005	65.4	16	7— 8
6	9	2,388	76.5	20	12— 1
6	10	2,570	83.8	24	14— 6
6	11	2,751	91.0	28	16—11
6	12	2,942	98.3	32	19— 4
8	9	3,096	102.0	36	22—11½
8	10	3,337	111.7	40	25— 4½
8	11	3,578	121.4	44	27— 9½
8	12	3,885	131.0	48	31— 5
10	9	3,760	127.5	52	33—10
10	10	4,061	139.6	56	36— 3
10	11	4,363	151.7	60	38— 8
10	12	4,684	163.8	64	42— 3½
12	9	4,380	153.9	68	44— 8½
12	10	4,742	167.5	72	47— 1½
12	11	5,104	182.0	76	49— 6½
12	12	5,488	196.6	80	53— 2

As the temperatures of the water and gas approach, the surface must be increased for a given rise of the water temperature. The ashpit loss will be about 3 per cent and the unaccounted-for losses and radiation are about 3.5 per cent. As the efficiency of boiler and economizer is 80 per cent, the flue-gas loss will be 13.5 per cent, or 1350 B.t.u. per pound of coal.

Flue gases from the coal will contain about 0.5 lb. of water in the form of superheated steam; therefore, as the total weight of the gases is 12.25 lb. per pound of coal, the gases will weigh 11.75 lb. and the water vapor 0.50 pound.

Assuming that the air entering the boiler is at a temperature of 70 deg. the temperature of the escaping gases can be found from the equation,

$$11.75 \times 0.24\ (t - 70) + 0.5 \times 0.48\ (t - 212) + 0.5 \times 970.4 + 0.5\ (212 - 70) = 1350$$

$$t = 340 \text{ deg.}$$

If the final gas temperature is 340 deg. the surface required is 8,000 square feet. The feed-water temperature will be 220 deg., a rise of 120

Cook County Court House, Chicago, Ill., containing 1830 H. P. of Heine Standard Boilers.

deg. from the assumed initial temperature. The return in heat units per pound of coal is fired is 6.3 × 120 = 756 B.t.u., or a return of 7.56 per cent on a heat value of 10,000 B.t.u.

Having determined the surface area of the economizer, the space requirements can be checked with fair accuracy from Table 42, which gives the dimensions of the economizer made by a prominent manufacturer. This table will apply as a general guide in determining the room required.

Air Heaters

HEATING the air supply to furnaces by abstracting heat from the exit gases is just as logical a method of saving fuel as is heating the feed water in the same way. The saving effected can be directly measured by the drop in temperature of the flue gases in passing through the air heater, or by the rise in temperature of the air, when the weights of air and gas per pound of fuel are known.

Usually the gases are passed through vertical pipes of about 3-in. bore, around which the air flows horizontally. In a system recently described by *J. Van Brunt*, the heater consists of a nest of semi-circular plates arranged in pairs so that the air flows in a path curved circumferentially from inlet to outlet, while the gases flow between the plates in straight chordal paths. This design makes a very compact and convenient arrangement.

The rate of heat transmission varies with the cleanliness of the surface, with the gas and air velocities, and with the difference in temperature between the gas and the air. Consequently, the areas of the passages and of the heating surface are directly related.

In Table 43 the symbols have the following meanings:

W = Weight of air or gas, pounds per hour.
A = Area of passages, square feet.
R = B.t.u. transmitted from flue gas to air per square foot of surface per hour per degree difference between average temperatures of gas and air.

Table 43 can be entered with W/A, and the value of R found. The heat (in B.t.u.) to be transmitted per hour divided by R times the average temperature difference between the gas and air is the heating surface required.

Table 43. Heat Transmitted Between Flue Gases and Air.

$\frac{W}{A}$	Values of R at Temperature Differences		
	100	200	300
1,000	1.6	1.7	1.8
2,000	1.9	2.3	2.7
3,000	2.2	2.9	3.7
4,000	2.5	3.5	4.6

This table has been prepared on the assumption that the values of W/A for gas and air will not vary more than 10 to 15 per cent. The area through the tubes is commonly from 30 to 50 per cent greater than that of the equivalent breeching. The air passages can be proportioned in the same manner as directed in Chapter 6 on CHIMNEYS, allowing for the temperature of air desired, and making the area between the tubes the mean of the hot and cold air ducts. The loss of draft through a well-designed heater will be about 0.1 in. of water column. The loss of air pressure will be from 0.1 to 0.2 in.; and to this must be added the resistance of the air ducts, making allowance for bends that cannot be avoided.

Hamilton County Court House, Cincinnati, Ohio, containing 1260 H. P. of Heine Standard Boilers.

Heating the air for combustion is practiced to a considerable extent in marine work, with mechanical draft. In the Howden system the air is forced through the heater, while in the Ellis and Eaves system it is drawn through by the induced draft fan.

Most of the applications in land service have been confined to municipal refuse destructors wherein forced draft fans or steam-jet blowers draw the air through the heater and discharge it into a closed ashpit, the temperature rise being from 300 to 500 deg.

When the air for combustion is heated 300 deg. or more, trouble might be expected from grate bars burning out more rapidly, and from excessive clinkering; but this does not appear to be the case.

When heat that would otherwise be wasted in industrial processes can be used to heat the air for combustion, the thermal efficiency of the whole plant is increased. In electric power plants it is becoming general so to utilize the heated air resulting from ventilating the generators, the air ducts being piped from the generators to the forced draft fan inlets. The forced draft air can be drawn from parts of the boiler room or from the space near industrial processes, space that otherwise might become unpleasantly hot, making for more comfortable operation and increased thermal efficiency.

Auxiliary Engines and Turbines

IN certain definite fields, according to *J. S. Barstow,* the small turbine is of conceded superiority, and in other fields the engine must hold sway. The following factors determine the adaptability, cost and economy of the equipment to be installed for any given service:

A.—Maximum or minimum permissible speed, and whether the apparatus is driven at constant or variable speed.

B.—Steam pressure (initial and final) and superheat temperature, if any.

C.—Power capacity of apparatus.

D.—Space requirements of turbine and engine units, available room, power house construction, and cost of foundation or other supporting structure.

E.—Use or application, if any, of exhaust for feed water heating, steam heating or process.

F.—Available cooling water supply; if the turbine or engine is to be run condensing, the temperature of the water and whether it must be artificially cooled and re-circulated.

G.—Operating conditions, attendance, oiling, starting and stopping, vibration and noise.

H.—Cost of complete installations, including foundations, piping and condenser equipment, if any.

Not until about 20 years ago was a practicable small turbine developed, and even up to ten years ago the turbine was looked upon mainly as an experiment. In the last few years, however, this type of prime mover has been built not only in small sizes, but also in 50,000 H.P. units for large central stations. The turbine therefore is as well developed as is the steam engine after more than one hundred years of improvement.

Speed Limitation is of first importance in selecting the type of prime mover. Peripheral velocities must be high to utilize efficiently the energy of a steam jet in the turbine. Its water rate is lowest, therefore, when running at a constant high speed. When speed variation or reversal is required, or when the speed is necessarily low, the engine is much better adapted to the service.

Erecting Two Heine Standard Boilers for the Caribbean Petroleum Co., San Lorenzo, Venezuela.

If an engine is run at very high speeds, operating troubles are sure to be numerous, the upkeep is excessive, and the service unsatisfactory. The lack of driven apparatus designed to run efficiently at speeds consistent with high turbine economy has, in the past, frequently dictated the use of engines as prime movers.

Speed reduction gears have been used with the turbine almost from the beginning of its commercial development. Recent improvements in high speed gearing, as well as in the manufacture of high speed direct-connected generators, blowers and pumps, running at 3000 r.p.m. and above, have greatly increased the possibilities for turbine installations. Direct-current generators as small as 10 K.W. capacity, and 60 cycle alternators of capacities as low as 150 K.W., designed for gear drive, are now obtainable. It is said that the increased efficiency of the higher speed turbine, and the saving effected in the generator construction by reason of the slower speed permissible in the driven end, justify the expense and complication that the gears introduce.

For power station work, where some of the auxiliaries are usually motor driven, the exhaust steam can be entirely condensed in the feed-water heater, and the water rate of the steam driven auxiliaries is not a limiting factor. Reliability, accessibility, low maintenance and labor costs are of more vital importance. Power station designers have always preferred, therefore, the turbo-auxiliary units, and there is now a decided tendency toward geared installations.

Small engine units are run at high speeds, so that it is exceedingly difficult to keep them in continuous service, and almost impossible to secure smooth, quiet operation. The reciprocating units require close attention, and must be shut down, overhauled, and adjusted at frequent intervals; the cost of maintenance is high and breakdowns are by no means rare. An accident to a circulating or hot-well pump, for example, usually necessitates a shutdown of the main generator, with consequent loss of production, and in a public utilities plant, loss of prestige and the incurrence of public ill-will. In central stations, therefore, where the main units are few in number and of large size, the circulating, hot-well and boiler feed pumps are usually turbine-driven.

For driving fans of large capacity at low pressures, say less than 1½ in. of water, for induced draft, hot air heating and ventilating systems, engines seem well suited. Fans built for this service run at less than 200 r.p.m., and are of the paddle-wheel type. In induced draft work, load fluctuation may require frequent changes in speed; the engine is under the control of a throttling regulator, which is automatically actuated by a change of steam pressure. These conditions are unfavorable to turbine economy.

The furnaces of underfeed stokers often carry air-duct pressures as high as 6 or 8 in. of water; the high speed multi-blade fan then makes the better installation, particularly when one fan serves several boilers. The size of the blower units would be excessive at speeds below 400 r.p.m., and the engine drive is uncertain and expensive at this speed. Underfeed stokers at best can develop only from one-quarter to one-third their maximum capacity with natural draft, so that a blower breakdown under peak load is a serious matter. The ability of the turbine to stand up under the conditions justly entitles it to preference.

Owing to the freedom from reciprocating motion, the foundations required for turbines are small and light, there being little vibration to be absorbed when the machines are well aligned and balanced. The small sizes can be safely operated on floors designed for the ordinary loads. No difficulty is experienced with the transmission of vibration to the structural members of the building or to the piping system.

The Omaha, Nebr. Plant of the American Smelting & Refining Co. This Company has installed in this plant 2550 H. P., and in its subsidiaries 14,500 H. P. of Heine Standard Boilers.

The turbine is often used for boiler feed-pumps (centrifugal type) of more than 250 gal. per min. capacity, or about 3,000 boiler horsepower developed, and on account of its small size the layout is usually neater and more compact. When regulation by throttling is unnecessary, and the pumps run at or near capacity, the economy is better than that of the direct acting type. Valve renewal and packing troubles are avoided. The overload capacity of the centrifugal type is small, so that the pump must be proportioned to meet the maximum demand, not the average boiler horsepower requirements. In the smaller sizes, the cost of turbine units is high; when the load fluctuates widely and the speed must vary, the economy is poor and it is better to install reciprocating pumps.

The turbine possesses a great advantage in the simplicity of its construction, which tends toward increased reliability and lower cost of maintenance. It can be started and loaded more quickly. In operation, it requires much less attention than an engine of corresponding capacity. The lubrication devices are few in number and of simple design.

Applicability of Turbines. Summarizing the foregoing, the field of usefulness of the turbine can be stated to be:

1.—Direct-connected units, operating condensing. 60 cycle generators in all sizes.

Direct-current generators up to 1000 K.W. capacity, including exciter units of all sizes.

Centrifugal pumps operating under substantially constant head and quantity conditions, and at heads say from 100 ft. up, depending upon the size of the unit. (This includes boiler feed pumps of more than 250 g.p.m. capacity, or 3,000 boiler horsepower developed.)

Fans and blowers for delivering air at pressure from 1½ in. water column to 30 lb. per sq. in.

2.—Direct connected units, operating non-condensing for all the above purposes, when steam economy is not the prime factor, or when the exhaust steam can be completely utilized, particularly if exhaust steam must be oil-free.

3.—Geared units, operating either condensing or non-condensing, for all the above applications; and for others where a steam engine is required on account of the slow speed of the driven apparatus.

Applicability of Engines. The fields of usefulness of the engine are given as follows:

1.—Non-condensing units, direct-connected, or belted and used for driving electric generators of all classes except exciter sets of small capacity, unless belted from the main engine.

Centrifugal pumps, operating under variable head and quantity conditions and at low heads, say up to 100 ft., depending on the capacity of the unit.

Pumps and compressors for delivering water or gases in small quantities and at high pressures; pumps at pressures above 100 lb. per sq. in. and compressors at pressures from 1 lb. per sq. in. and above.

Fans and blowers (including induced draft fans) for handling air in variable quantities and at low pressures, say not over 5-in. water column.

All apparatus requiring reversal in direction or rotation, as in hoisting and traction engines.

2.—Condensing units directly connected or belted, for all the above purposes, particularly when the condensing water supply is limited, and the water must be re-cooled and recirculated.

Adelphia Hotel, Philadelphia, Pa., containing four 255 H. P. Heine Standard Boilers.

CHAPTER 10

HEAT INSULATION

THE function of a heat insulating material is to retard heat flow. It is *heat* insulation whether used to keep heat where it *is* wanted, as in a steam pipe; or to keep heat away from where it *is not* wanted, as from the cold water in a drinking water line.

Surface Resistance. The heat lost per degree temperature difference between steam and air from metal 1-in. thick, heated by steam on one side, and exposed to air on the other, is much less than the value of k shown for the metal because the temperature difference between surfaces, $t_1—t_2$, is much less than the temperature difference between steam and air, $t_s—t_a$. (See Fig. 175.) The air cannot take up the heat as rapidly as it can be transmitted by the metal; therefore, the temperature drop from the outside surface of the metal to the surrounding air is almost all of the total temperature difference between the steam and air. The drop through the metal, $t_1—t_2$, is only a small part of the total. The amount of heat transmitted per hour through unit thickness of material on flat surface is $k\ (t_1 - t_2)$. This holding back of the heat due to the inability of air to take it up as quickly as it can be transmitted is called "surface resistance."

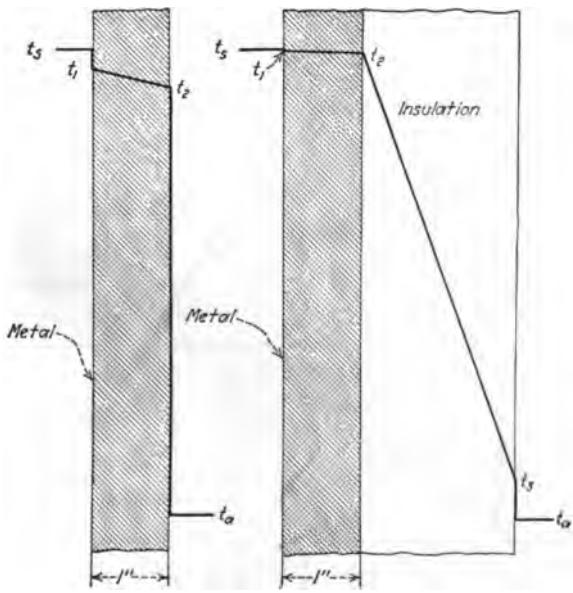

Fig. 175. Comparison of Heat Transmission from a Metal Plate, 1 inch Thick, when Insulated and Not Insulated.

In good conductors of heat the greater part of the resistance offered to heat flow is surface resistance. In insulating material, however, most of the

resistance is in the insulation, and the surface resistance has less effect on the amount of heat transmitted.

The surface resistance of a surface submerged in water is small as compared with that of one exposed to air. A pipe submerged in water will therefore transmit a vastly greater amount of heat than the same pipe surrounded by air, even though the internal conductivity of the metal is the same for each pipe.

Losses from Bare Heated Surfaces. Curve 1, Fig. 176, shows the rate of heat loss at various temperature differences between hot surface and surrounding air. Curve 2 shows the total heat loss at any particular temperature difference. Ordinates for curve 1 are on the left, and for curve 2 on the right of the chart.

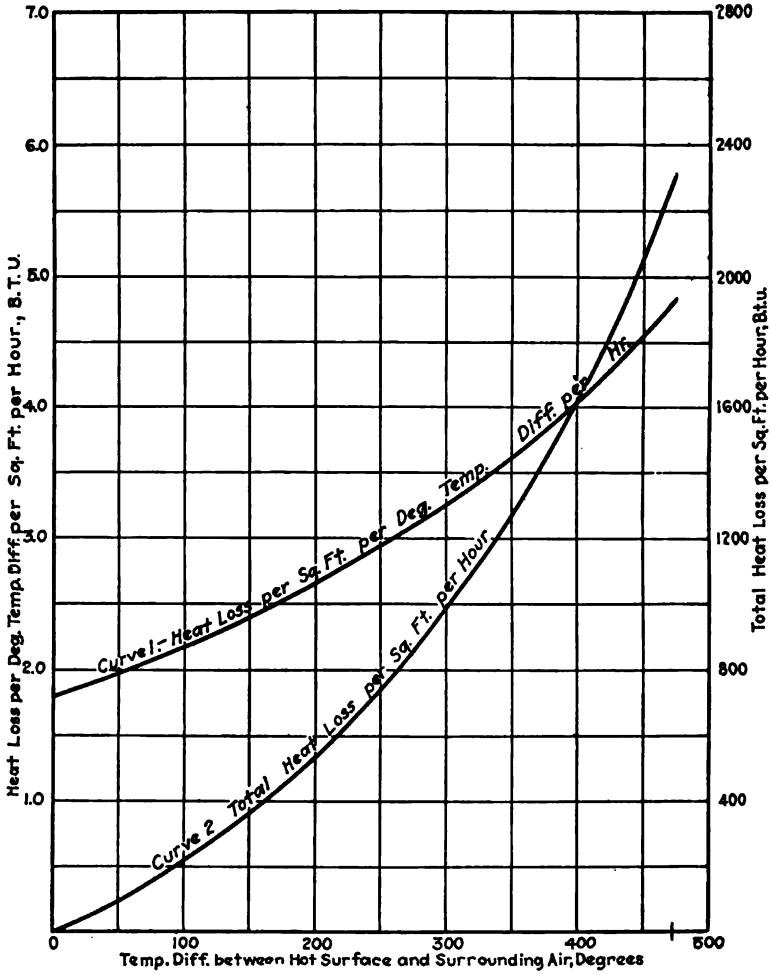

Fig. 176. Comparison of Rate of Heat Loss at Various Temperature Differences and at a Constant Temperature Difference.

Table 44, for different steam pressures and temperatures, shows the heat lost per year from a square foot of heated surface, the amount of coal required to replace these losses and the square feet required to waste a ton of coal per year.

Table 44. Heat Losses from Uninsulated Hot Surfaces.

Steam Pressure (Gage), Lb.	Steam Temperature, Degrees	Temp. Diff., Steam and Surrounding Air, Degrees	Heat Loss per Sq. Ft. per Hr., B.t.u.	Pounds of Coal Wasted per Year per Sq. Ft. of Uninsulated Surface	Sq. Ft. of Surface Wasting 1 Ton of Coal per Year
0	212	142	334	293	6.82
10	240	170	425	372	5.38
25	267	197	522.5	458	4.37
50	298	228	644	564	3.55
75	320	250	737.5	646	3.10
100	338	268	820	718	2.79
150	366	296	960	840	2.38
200	388	318	1,079	945	2.12
250	406	336	1,184	1,036	1.93

Temperatures Below 212 Degrees.

Surface Temperature, Degrees	Temp. Diff., Surface and Surrounding Air, Degrees	Heat Loss per Sq. Ft. per Hr., B.t.u.	Pounds of Coal Wasted per Year per Sq. Foot of Uninsulated Surface	Sq. Ft. of Surface Wasting 1 Ton of Coal per Year
100	30	56.6	49.6	40.3
120	50	97.5	85.4	23.4
140	70	142.0	124.3	16.1
160	90	190.0	166.3	12.03
180	110	242.0	212.0	9.44
200	130	298.5	261.5	7.65

Above figures based upon 10,000 B.t.u. available per pound of coal, which is equivalent to a boiler efficiency of 70 per cent, the heat value of the coal being assumed as 14,000 B.t.u. per pound. The temperature of the "surrounding air" is 70 degrees in both parts of the table.

At 100 lb. pressure, less than 3 sq. ft. of bare surface are required to waste a ton of coal in a year. An area greater than this is exposed when a pair of 10-in. flanges is left uninsulated. Also, many surfaces at low temperatures are left uninsulated on the ground that the temperature is not high enough to justify insulation. Table 44 shows, however, that only 12 sq. ft. of surface at 160 deg. are required to waste a ton of coal per year. Surfaces too hot to be touched with comfort represent a loss of heat. Fig. 177 shows the saving by the use of a good insulation.

Value of Heat Insulation. Heat insulation saves fuel directly or indirectly; in addition, insulated equipment renders better service, working conditions near heated surfaces are more comfortable, and the safety from fire and accident is greater.

Insulation cannot prevent the flow of heat completely, as it does the flow of electricity. All substances conduct heat to some extent. Table 45

A part of the 4500 H. P. Installation of Heine Standard Boilers equipped with Jones Underfeed Stokers in the Plant of The New York Mills Corp., New York Mills, N. Y.

shows how much lower the conductivities of some materials are than those of others and therefore indicates which should be good insulators.

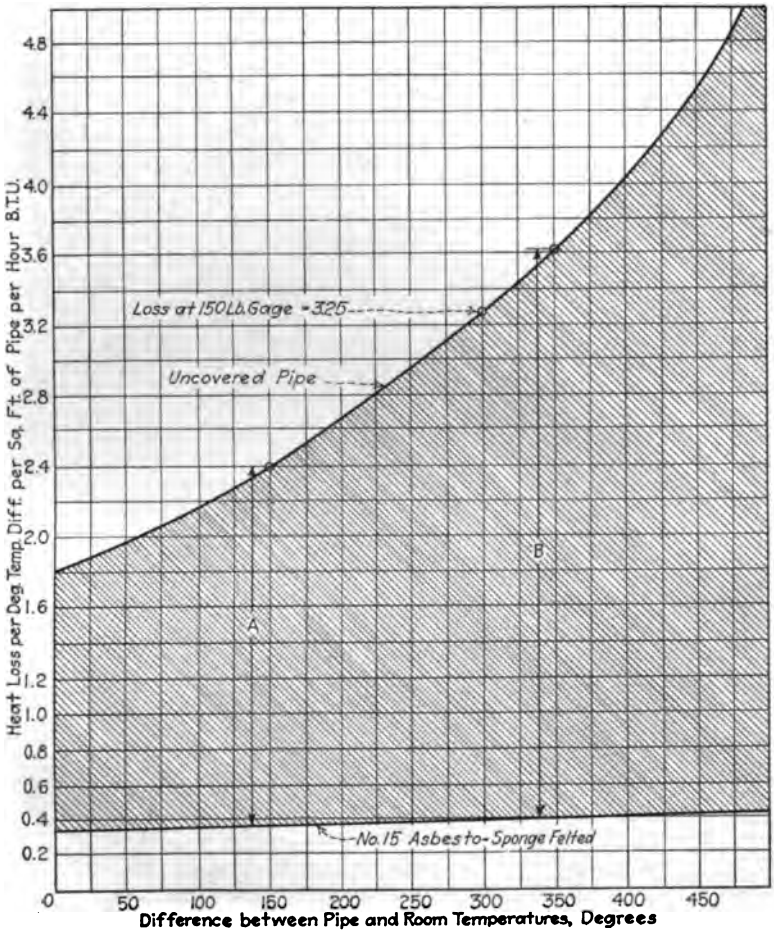

Fig. 177. Heat Loss from Bare Steam Pipe and Saving Effected by Good Insulation Covering. Lines A and B show Saving per Degree Difference is Much Greater at High Steam Temperatures.

Conductivities of Materials. Table 45 shows the conductivities of common materials. The conductivity, k, is expressed in B.t.u. per square foot per degree temperature difference between surfaces per inch thickness per hour.

Requirements of Good Insulation. In order to be satisfactory, an insulation must withstand the temperature and the wear and tear imposed upon it. The mechanical form must permit its application in workmanlike manner to the surfaces to be insulated. The insulation must be durable and must be efficient in preventing heat flow. Insulating materials of laminated fibrous structure are considered more durable than molded forms of insulation.

Three 365 H. P. Heine Standard Boilers in the Plant of the Hudson Consumers Ice Co., Hoboken, N. J. Boilers in background set over Murphy Stokers.

Table 45. Conductivities of Materials.

Material	Temperature, Degrees	Conductivity, (k)
Silver	64	2,920
Silver	212	2,880
Copper	64	2,667
Copper	212	2,638
Aluminum	64	1,393
Aluminum	212	1,428
Pure Iron	212	439
Wrought Iron	212	412
Steel (Soft)	....	322
Cast Iron	212	314
Coal *	....	23.2
Granite	....	20.0
Ice	....	16.5
Marble	....	15.0
Limestone	....	15.0
Sandstone	....	14.5
Soil (Wet)	....	10.7
Soil (Dry)	....	2.55
Firebrick	....	9.0
Concrete (Stone)	1,800	7.8
Concrete (Stone)	....	6.38
Concrete (Cinder)	....	2.35
Glass	....	7.0
Brickwork	....	5.0
Water	....	4.35
Sand (White, Dry)	....	2.7
Wood—Maple	....	1.17
Wood—Oak	....	1.04
Wood—Yellow Pine	....	1.0
Wood—White Pine	....	0.83
Diatomaceous Earth Blocks	1,000	0.85
Air Cell Asbestos	300	0.72
85 percent Magnesia	300	0.50 to 0.55
Asbesto-Sponge, Felted	300	0.468
Cork	50	0.35
Hair Felt	50	0.30
Air (True Conductivity, Radiation and Convection eliminated)**	....	0.18

In the materials from Diatomaceous Earth to Hair Felt, inclusive, the temperatures are the differences between surfaces. When the temperature is not stated in the table, it is understood to be at or near that of the ordinary room.

*Carbon, in its various forms, has conductivities varying between extremely wide limits. Some forms of graphite have conductivities from 10 to 20 times as great as that given above for coal, while powdered charcoal has a conductivity only about 1/30th that of coal.

**Radiation and convection are the largest factors in the transmission of heat through open air, conduction being comparatively insignificant. The true conductivity is approached only when the air is confined in minute cells, and the effects of radiation and convection are minimized.

Practically all commercial insulations depend upon entrapped air for their insulating value. Air has a low heat *conducting* power (see Table 45) and if confined in small spaces to minimize the effect of *convection* within the spaces, and of *radiation* of heat across them, the resistance to heat flow is high. Even perfect vacuum would be ineffective in preventing heat flow unless the bounding surfaces were mirrored to prevent radiation.

In Fig. 178 the heat losses through different commercial insulating materials are compared. Table 46 shows the thicknesses and weights per lineal foot of the materials referred to in Fig. 178. The uses for which materials are recommended by manufacturers are also given.

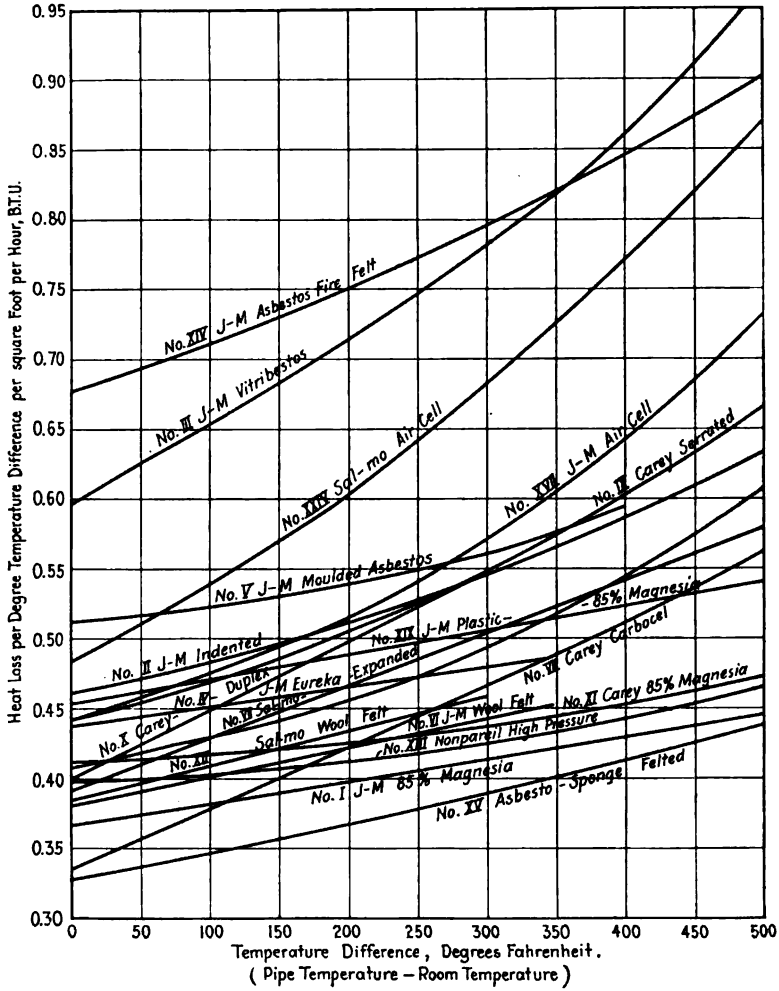

Fig. 178. Comparison of Heat Loss Through Different Insulation Materials.

Materials for Insulations. Asbestos, Fig. 179, is the most important of all materials used as insulations at steam temperatures. Many insulations consist almost entirely of asbestos, and on account of its fibrous form asbestos is used as a binding material in almost every insulation manufactured for high temperatures.

Table 46. Thickness and Weight of Insulating Materials.

Test No.	Material	Thickness, Inches		Wgt., Lb. per Lin. Ft.	Recommended for
		Actual	Apparent *		
I	J-M 85 per cent Magnesia	1.11	1.18	2.73	High pressure steam.
II	J-M Indented	.....	1.12	3.46	High pressure steam.
III	J-M Vitribestos	0.96	1.11	4.05	Stack and breeching linings.
IV	J-M Eureka	.....	1.04	4.60	Low pressure steam and hot water.
V	J-M Molded Asbestos	1.25	1.26	5.53	Low and medium pressure steam.
VI	J-M Wool Felt	.....	1.10	2.59	Low pressure steam and hot water.
VII	Sal-mo Expanded	.....	1.07	3.47	High pressure steam.
VIII	Carey Carocel	0.99	1.06	3.06	Medium and low pressure steam.
IX	Carey Serrated	1.00	1.13	5.66	High pressure steam.
X	Carey Duplex	.96	1.01	1.79	Low pressure steam and hot water.
XI	Carey 85 per cent Magnesia	1.10	1.19	2.74	High pressure steam.
XII	Sal-mo Wool Felt	.....	1.01	3.73	Low pressure steam and hot water.
XIII	Nonpareil High Pressure	1.16	1.23	2.96	High pressure & superheated steam.
XIV	J-M Asbestos Fire Felt	0.99	1.09	3.75	High pressure & superheated steam.
XV	J-M Asbesto-Sponge Felted	.....	1.16	4.04	High pressure & superheated steam.
XVI	J-M Asbestocel	.....	1.10	1.94	Medium and low pressure steam and hot water.
XVII	J-M Air Cell	1.00	1.11	1.55	Low pressure steam and hot water.
XX	Plastic 85 per cent Magnesia	1.05	1.05	3.33	Fittings and irregular surfaces.
XXIV	Sal-mo Air Cell	.....	0.95	1.57	Low pressure steam and hot water.

*Apparent thickness is distance from pipe surface to outer surface of insulation.

Chemically, asbestos is a hydrated silicate of magnesia. A typical analysis is given below:

	Per cent.
Silica (SiO_2)	41.0
Magnesium oxide (MgO)	41.5
Ferric oxide (Fe_2O_3)	3.0
Aluminum oxide (Al_2O_3)	0.9
Water (H_2O)	12 to 14

Asbestos, although highly heat resisting, has little insulating value in its natural rock form (see Fig. 179). Not until the fibers are separated and manufactured into felts, in which they entrap a large number of finely divided air spaces, does asbestos become an efficient insulating material.

Fig. 179. Rock Asbestos.

Three 330 H. P. Heine Standard Boilers set over Detroit Stokers in the Plant of Joseph Joseph & Bros. Co., Cincinnati, Ohio.

Asbestos will withstand temperatures up to about 1500 deg., but the fibers become brittle when subjected continuously to temperatures above 1200 degrees. The limit for the fire-felt type of asbestos insulation, which consists principally of asbestos fiber and a binding material, is about 1200 degrees. The limiting temperature for laminated forms of asbestos insulation is about 700 degrees. The limit for the cellular types of asbestos insulation is about 300 deg., on account of the organic matter used in the asbestos felt from which they are built.

Carbonate of Magnesia. Next in importance to asbestos is hydrated magnesium carbonate [$4MgCO_3$. $Mg(OH)_2$. $5H_2O$]. This material in the form manufactured for insulating purposes is light and porous and has good insulating value. The necessary mechanical strength and durability are secured by mixing about 15 per cent of asbestos fiber and 85 per cent of hydrated magnesium carbonate; from this the name "85 per cent magnesia" is derived.

The natural rock from which the magnesium carbonate is obtained is hard and dense, resembling marble. In this original form the material has practically no insulating value. The high insulating value of 85 per cent magnesia is due to the process of manufacturing. The magnesium carbonate is separated from the other ingredients in the original stone, the finished product having one-tenth of the density and less than one-twentieth of the conductivity of the natural rock.

The 85 per cent magnesia is not adapted to temperatures above 500 degrees. At higher temperatures the material is calcined, loses CO_2, shrinks and loses strength rapidly.

Diatomaceous Earth (*Kieselguhr*) is a naturally occurring mineral of high heat resistance. It consists of practically pure silica (SiO_2), which is finely divided, owing to the manner in which the deposits were built up under water in prehistoric times from the skeletons of microscopic organisms known as diatoms.

The insulating value is less than that of asbestos or magnesia, but it will withstand higher temperatures than either of these materials. In molded forms it is usually strengthened by being mixed with asbestos fiber. Blocks manufactured from diatomaceous earth will withstand temperatures up to 2000 degrees.

Cork. For the insulation of larger surfaces at low temperatures, as in refrigeration work, cork is the most desirable material. The source of cork is the bark of the cork oak tree. The cork is ground and molded into sheets by the application of heat and pressure. No binding material is required as the natural gum of the cork cements the particles firmly, and serves as a moisture proof coating as well. The use of cork is confined almost exclusively to refrigeration and cold storage work.

Hair Felt. This has the highest insulating value of any commercial insulating material. It is widely used for the insulation of brine and cold water pipes, and is then sealed in with waterproof membranes to prevent access of moisture from the air.

On outdoor steam lines, hair felt is also used outside of other insulations. The inner layer of asbestos or magnesia protects the hair felt from the high temperatures, while the high insulating value of the hair felt increases the efficiency of the combination. The maximum temperature to which hair felt can be subjected is about 250 degrees.

Miscellaneous Materials. Wool, silk, and cotton have insulating value, but this is principally used in clothing. Wood and paper are of value as insulations, and are used in building construction.

Three 308 H. P. Heine Standard Boilers equipped with Green Chain Grate Stokers installed in the Kimball Building, Chicago, Ill.

Heat Transmission Through Insulation.

The factors in determining the rate at which heat will be transmitted through unit area of an insulating material are:

(1) The conductivity of the material,
(2) The temperature difference between its two surfaces,
(3) The thickness of the insulation,
(4) The form of insulated surface.

Of lesser importance are the finish of the surface and the velocity of air currents over the surfaces.

Table 45 shows how greatly the conductivities of materials vary. The figures in the table are surface-to-surface conductivities. Fig. 178, however, compares approximately equal thicknesses of insulating materials, the ordinates being actual rates of heat transmission per square foot per hour per degree temperature difference between hot surface and surrounding air.

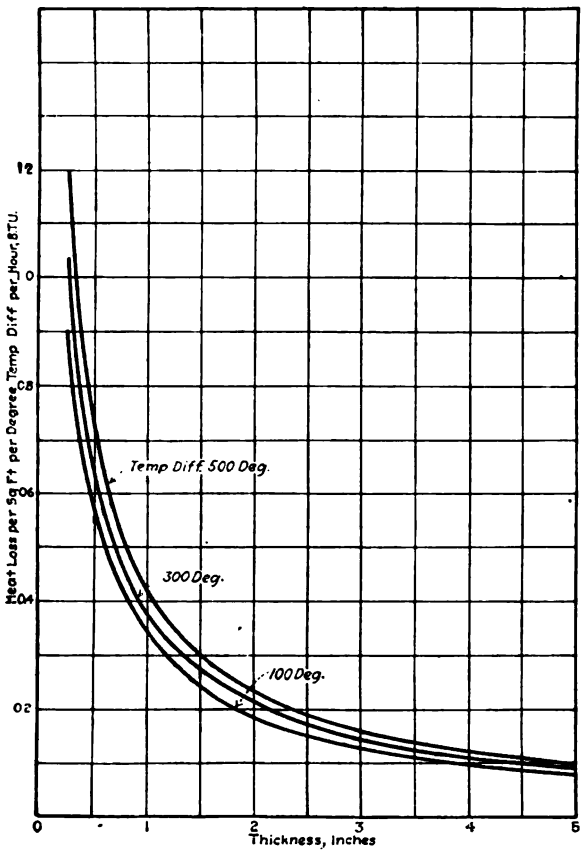

Fig. 180. Effect on Heat Transmission from a Flat Surface of Various Thicknesses of Insulating Material.

Effect of Temperature on Heat Transmission. Fig. 180 shows that the rate of heat transmission per degree is not the same at all temperatures. However, the loss at any temperature can be found by multiplying the transmission factor given in the chart for any temperature difference between hot surface and surrounding air, by that temperature difference.

Efficiency. Insulations are often compared in terms of their "insulating efficiencies." As thus used, the term "efficiency" is the percentage of the uninsulated surface loss saved by a given insulation. It is bare surface loss minus loss from insulated surface, divided by bare surface loss; both losses apply to the same area and are for the same temperature difference.

Thickness and Heat Transmission. Fig. 180 shows the variation of heat transmission from different thicknesses of material on flat surfaces. The loss through material 2-in. thick is greater than one-half of that through material 1-in. thick, even though the figures are for flat surfaces, for which the resistance of the 2-in. material is exactly double that of the 1-in. material. The "surface resistance" is practically the same for the 1-in. as for the 2-in. thickness. Consequently, the resistance of 2 in. of material plus one surface resistance is not double that of the 1 in. of material plus one surface resistance, and heat transmission is inversely proportional to total resistance.

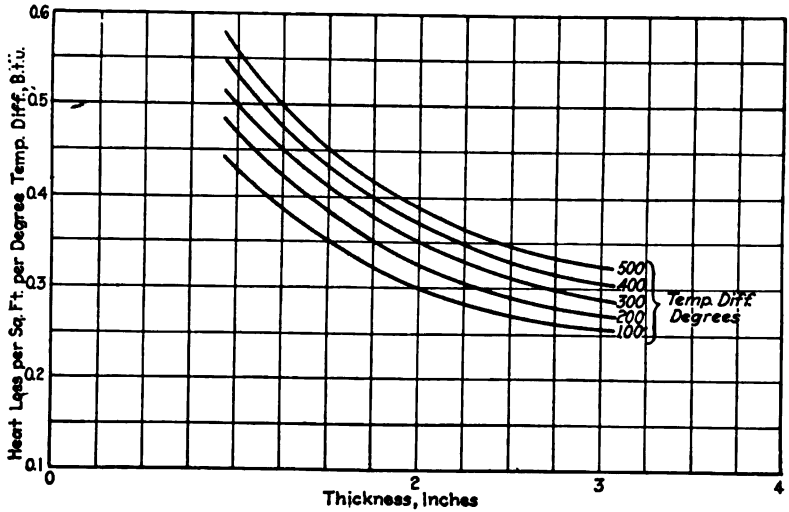

Fig. 181. Effect on Heat Transmission from a Pipe Surface of Various Thicknesses of Insulating Material.

Fig. 181 shows the effect of the thickness on heat transmission for pipe surfaces. The loss through material 2-in. thick is even more above one-half of that through the 1-in. thickness, than it was for the flat surfaces. In addition to the surface resistance effect, the second inch of insulation is applied over a larger area than the first inch, so that it does not offer as much resistance to heat flow.

Pipe Size and Heat Transmission. Fig. 182 shows how the rate of heat transmission through a given thickness of insulation varies with pipe size. By comparing this chart with Fig. 180, the losses through different thicknesses on pipes are found to be greater than through the same thickness of the same insulation on flat surfaces; also, as shown in Fig. 183, the losses are greater on small than on large pipes, other factors being the same.

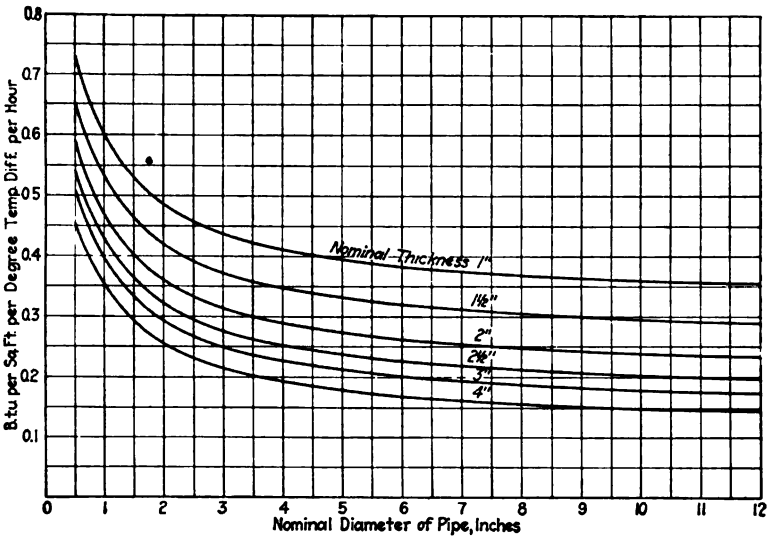

Fig. 182. Comparison of Heat Loss from Various Sizes of Pipe.

In flat surface insulation all the heat flows straight through in parallel lines, but in pipe insulation the heat has a continually widening path into which to spread as it flows outward. Consequently more heat will flow from a given area of pipe surface than from the same area of flat surface. The smaller the pipe the more rapidly the path for heat flow spreads out; therefore the greater is the rate of heat loss for a given pipe area and thickness of insulation.

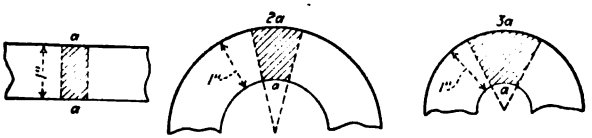

Fig. 183. Relative Heat Loss Through Flat and Curved Surfaces.

Air Currents and Surface Finish. Air currents greatly decrease the surface resistance. With bare surfaces the losses can be increased by the effect of wind to several times the values in still air. When efficient insulations are applied so that they are sealed against the effect of air blowing through the joints, the maximum increase in heat transmission due to wind velocity varies from about 10 per cent for an insulation 3-in. thick to about 30 per cent for a 1-in. thick insulation. These figures are only approximate, because the more efficient the insulation, the less affected it is by wind velocity.

If the insulation is loosely applied so that air can circulate through the joints and crevices or between the insulation and the pipe, wind can increase the loss upward of 100 per cent. Painting the surface of insulation usually decreases the loss of heat slightly and is desirable because the surface is thus sealed against circulation of air.

3000 H. P. of Heine Standard Boilers equipped with Heine Superheaters and Murphy Stokers in the Plant of the New York Air Brake Co., Watertown, N. Y.

Thickness of Insulation. The thickness it will pay to use depends upon:
(1) The temperature difference between hot surface and air,
(2) The value of the heat units to be saved by insulation.
(3) The size of pipe,
(4) The kind of insulation used,
(5) The cost of insulation.

The last increment of insulation put on should save enough to pay a good return on its cost. The minimum allowable return is usually taken at about 14 per cent, which covers interest and depreciation.

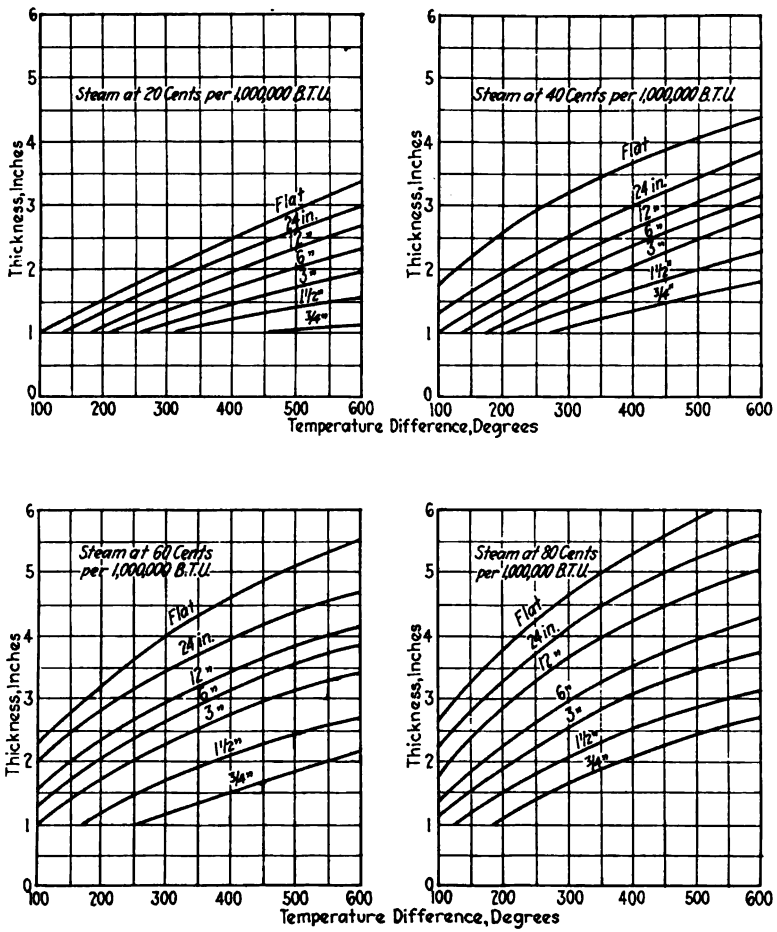

Fig. 184. Chart for Determining Most Economical Thickness of 85 Per cent Magnesia.

Mercy Hospital, Chicago, Ill., equipped with 1100 H. P. of Heine Boilers.

Fig. 184 is a chart for determining the most economical thickness of 85 per cent magnesia. It can also be used in selecting the thickness of other materials. However, the actual saving should be checked to determine whether the return on the investment is satisfactory.

The data given in Figs. 178 to 184 can be used to determine the most economical thickness of insulation, as follows: Required to find whether 2 or 2½ in. thickness of asbestos sponge felted insulation should be used on a boiler drum. Steam pressure is 150 lb. gage; cost of coal, $5 per ton; cost of insulation, 30 cents per sq. ft. 1 in. thick; boiler room temperature, 80 degrees. (All heat losses and savings are expressed in B.t.u. per degree of temperature difference.)

Steam temperature at 150 lb. gage pressure 366

Room temperature 80

Temperature difference 286

Heat loss per sq. ft. per hour through 2-in. thick asbestos sponge felted (Fig. 180) 0.21

Heat loss per sq. ft. per hour through 2½ in. thick asbestos sponge felted 0.17

Saving per sq. ft. per hour per deg. temp. diff. by use of 2½-in. thickness 0.04

Saving per sq. ft. per hour $= 286 \times 0.04 =$ 11.44

Saving per sq. ft. per year $= 8760 \times 11.44 =$ 100,300

Saving in lb. of coal per sq. ft. per year ..... $\frac{100,300}{10,000} =$ 10.03

Saving in dollars per sq. ft. per year ..... $\frac{10.03}{20000} \times \$5.00 =$ 0.025

Cost of 2½ in. insulation per sq. ft. $= 2\frac{1}{2} \times 0.30 =$ 0.75

Cost of 2 in. insulation per sq. ft. $= 2 \times 0.30 =$ 0.60

Cost of additional ½ in. of insulation = ... 0.15

Above saving expressed as percentage return on additional cost ..... $100 \times \frac{0.025}{0.15} = 16.7$

This is a satisfactory return so that the use of 2½ in. thick insulation is a paying investment.

(On such surfaces as boiler drums and heaters, the ½ in. of insulation is usually applied in the form of a plastic insulating cement.)

In like manner, Figs. 182 and 184 can be used to check the most economical thicknesses of pipe insulations.

Insulation of Boiler Drums and Piping. In insulating steam and hot water pipes and boiler drums, the correct thickness (see Fig. 184) should be applied so that there are no crevices or open joints. Asbestos cement can be used to seal openings, and a layer of asbestos cement can be applied over the outside of sheet or block insulation, to give a smooth hard finish.

Boiler Room of the River Mines, Mo. Plant of the St. Joseph Lead Co., showing Heine Standard Boilers set over Green Chain Grate Stokers. This Company has installed 7000 H. P. of Heine Boilers.

Boiler Wall Insulation. By insulation of boiler walls about one-half of the heat transmission through them can be prevented. This saving alone would make the insulation pay, but the saving can be still larger if the insulation seals the wall effectively against air infiltration. To accomplish this the insulation should be applied in large sheets and finished on the outside with about ½ in. of asbestos cement.

The application of insulation on the outside of a brick wall is quite different from applying it to a steam-heated surface at the same temperature. The steam-heated surface remains at about the same temperature as it was before the insulation was applied; for the temperature is only a little below that of the steam. On the other hand, the blanketing effect of insulation holds the heat in the brick wall. The temperature of the wall surface is greatly increased, the outer surface of the wall being at a temperature far below that of the source of heat. This temperature increase may amount to 500 deg. on the portions of the wall opposite the furnace, varying with the thickness of wall and the thickness and kind of insulation. Consequently an insulation more than 90 per cent efficient on a steam-heated surface saves only from 40 to 50 per cent of the heat radiated from a brick wall. The insulation itself is not any less efficient, but the difference is due to the increased temperature of the wall surface.

Reference should also be made to Chapter 4 on FURNACES AND SETTINGS.

Breeching Insulation. If the breeching leads directly to the stack the heat saved by insulation does not find its way into the steam. However, the draft is increased when this heat is retained in the gases. With an economizer the heat is returned to the boiler. Insulating the breeching helps to cool the boiler room, which otherwise might be unbearably hot.

Breechings are insulated either by an inside lining or by insulation applied to the outside surface. An inside lining, finished with a coating of refractory cement, protects the steel. On the other hand more efficient insulation can be used on the outside of the breeching, and then does not obstruct the draft area.

Overhead Outdoor Lines. When outdoor lines are run overhead they can be insulated with the same materials used on similar lines indoors. The insulation must be thicker on account of the lower temperatures and the exposure to wind. (See Hair Felt.) It must also be protected from the weather by sheet iron or asbestos roofing jacket. Hair felt, with an inner lining of asbestos or magnesia, is used successfully for outdoor lines.

Underground Lines in tunnels can be treated just as if they were indoors, except that the canvas must be thoroughly painted as a protection against moisture.

Lines running in covered trenches should be treated in the same manner as overhead outdoor lines.

Lines running underground can be insulated by enclosing them in vitrified tile conduit and placing an efficient filling material in the space between the pipe and tile. All joints must be sealed. Thorough drainage must be provided by a tile underdrain and crushed stone, which should be brought well above the center-line of the conduit.

Cold Water Lines. These can be insulated with hair felt or cork. Moisture condenses easily from the air on a cold pipe, and the moisture greatly reduces the insulating value. Therefore, all insulations on cold water lines should be so thoroughly sealed that moisture-laden air cannot penetrate them.

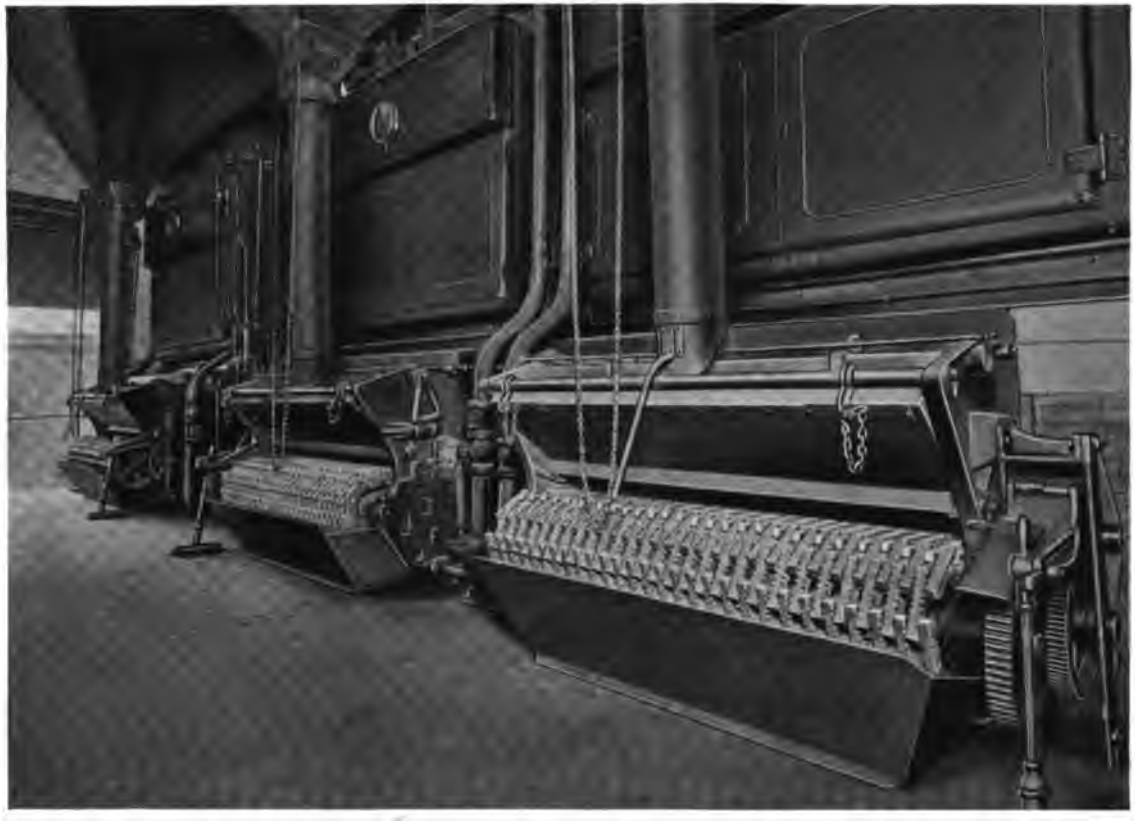

Washington Park Plant of the South Park Commission, Chicago, Ill., containing 1100 H. P. of Heine Standard Boilers set over Green Chain Grate Stokers.

CHAPTER 11

HEAT AND COMBUSTION

Theory of Heat

HEAT is a form of energy convertible in exact quantitative relations into other forms of energy. When two bodies at different temperatures are placed in communication, the temperature of the warmer body falls while that of the colder rises until the two bodies attain the same temperature. To account for this phenomenon, we say that heat flows from the hotter to the colder body. The fall of temperature of the one is due to a loss of heat, while the rise in temperature of the other is due to a gain in heat.

In the caloric theory, heat or caloric was assumed to be a fluid which could flow from one body to another and thus cause changes of temperature. But the experiments of Rumford, Davy, and Joule invalidated the old caloric theory and established the modern mechanical theory.

Heat may be generated by the expenditure of mechanical work, by chemical reaction, or by the electric current. Familiar examples are the heating of bearings due to friction, the heat generated by the combustion of coal, and the heat produced in an electric lamp filament.

Useful work can be done by the expenditure of heat, as in the steam engine. The law of definite relationship between work done and heat expended has been firmly established by the experiments of Joule. According to Joule, heat is not a fluid substance like caloric, but is a form of energy due to the motion or configuration of the molecules in a body or system.

Thermometry

THE measurement of the quantity of heat abstracted from or added to a body depends primarily upon the measurement of temperatures; that is, upon thermometry. The temperature of a body is a measure of the intensity of its heat, or its ability to impart heat to cooler bodies or to abstract heat from warmer ones.

Temperature is expressed in units called degrees, which are subdivisions of the temperature range between the temperature of melting ice and that of boiling water. There are three temperature scales in use: the scale of Fahrenheit, which is used in nearly all engineering work; that of Celsius, called the Centigrade scale, which is used generally in scientific laboratory work; and that of Reaumur, which is used to some extent in Europe.

The Fahrenheit scale is practically the only one used in American power plant practice. When no scale is mentioned in this book, the temperatures are given in degrees Fahrenheit.

Conversions of temperature readings from one scale to another are quite simple, as may be seen from the following table:

Table 47. Temperature Scales.

Explanation	Degrees Fahrenheit	Degrees Centigrade	Degrees Reaumur
Freezing Point	32°	0°	0°
Boiling Point	212°	100°	80°
Difference	180°	100°	80°
Ratio of Difference	9	5	4

Conversions are made as follows:

$$(C \times \frac{9}{5}) + 32 = F \qquad (30)$$

$$(R \times \frac{9}{4}) + 32 = F \qquad (31)$$

$$(F - 32) \times \frac{5}{9} = C \qquad (32)$$

$$R \times \frac{5}{4} = C \qquad (33)$$

$$(F - 32) \times \frac{4}{9} = R \qquad (34)$$

$$C \times \frac{4}{5} = R \qquad (35)$$

Absolute Temperature

INVESTIGATIONS with gases show that as they are cooled the pressure they exert is diminished uniformly. The temperature at which the pressure would vanish is called "absolute zero." This point, which has been closely approached in practice, is expressed as —460 deg. Fahr. The *"absolute temperature"* of a body is therefore its temperature above absolute zero, that is, the regular scale reading plus 460, and is often used in calculations relating to expansion and radiation.

Thermodynamic Temperature Scale

THE only standard of temperature which depends solely upon the nature of heat and is independent of the nature of any measuring substance is the "Thermodynamic Temperature Scale." By this scale, the ratio of any two temperatures is equal to the ratio between heat absorbed and emitted by a reversible thermodynamic engine working between the same temperatures. Again, these temperatures are numerically equal to those that would be indicated by an ideal gas thermometer, obeying exactly Boyle's law, $PV = RT$. Constant-volume gas thermometers, employing gases whose deviations from the properties of perfect gases are known, are used, therefore, to calibrate instruments for actual temperature measurement. Hydrogen is used for calibrating when the temperatures do not exceed 600 degrees. From 600 to 2800 deg. nitrogen is preferable, as it has less tendency to diffuse through the walls at the higher temperatures. The temperatures are observed as functions of the pressure increment, and a calibration thus determined for simpler forms of thermometer exposed to the same temperature.

Thermometers and Pyrometers

FIXED points have been determined by comparison with standard gas thermometers, and are used in calibrating instruments for high temperature readings. These are expressed in degrees Fahrenheit as follows:

Table 48. Fixed Points.

Substance	Deg. F.
Naphthalene boils at 760 mm. (29.92 in. of mercury) pressure	424.4
Benzophenone boils at 760 mm. pressure	582.5
Cadmium melts or solidifies in air	609.4
Zinc melts or solidifies in air	786.7
Sulphur boils at 760 mm. pressure	832.0
Antimony melts or solidifies in CO_2	1165.6
Aluminum solidifies in CO_2	1217.3
Silver melts or solidifies in CO_2	1760.0
Gold melts or solidifies in CO_2	1944.3
Copper melts or solidifies in CO_2	1980.7
Lithium metasilicate melts in air	2193.8
Diopside, pure, melts in air	2526.2
Nickel melts or solidifies in H and N	2645.6
Cobalt melts or solidifies in H and N	2713.6
Palladium melts or solidifies in air	2820.6
Anorthite melts in air	2821.1
Platinum melts in air	3186.0

Instruments for measuring temperature are classified by *J. A. Moyer* in Table 49, which also gives the temperature range and degree of accuracy usually obtainable.

Table 49. Thermometers.

Type	Range Deg. F.	Accuracy Deg. F.
1. Mercury Thermometers.		
(a) Ordinary Type	— 38 to + 575	From 1.0 deg. in common instruments up to 0.01 deg.
(b) Jena Glass, capillary tube filled with nitrogen.	— 38 to + 1000	Higher ranges accurate to 1 deg.
(c) Quartz Glass, capillary tube filled with nitrogen.	— 37 to + 1500	Higher ranges accurate to 1 deg.
2. Alcohol or Petrol-ether	— 325 to + 100	Accurate to 1 deg.
3. Electrical Resistance	— 400 to + 2200	Accurate to 0.01 deg. for range of 0 to 500 deg.
4. Thermo-electric	— 400 to + 3500	Reliable to nearest 5 deg.
5. Metallic-expansion, mechanical	+ 300 to + 1000	Uncertain
6. Vapor	+ 95 to + 1350	Reliable to nearest 2 to 10 deg.
7. Radiation		
(a) Thermo-couple in focus of mirror.	+ 300 to + 4000	Reliable to about nearest 20 deg.
(b) Bolometer	— 400 to temperature of sun	Reliable to about nearest 20 deg.
8. Optical	+ 1100 to temperature of sun	Reliable to about nearest 20 deg.
9. Seger Cones	+ 1100 to + 3600	Reliable to about nearest 20 deg.

City Hall, Philadelphia, Pa., operating Heine Boilers.

Mercury Thermometers. Because of the uniform expansion of mercury, and its sensitiveness to heat, it is commonly used as the fluid for thermometric measurement within the ranges given in Table 49. Up to temperatures of about 575°, the ordinary type of thermometer has a vacuum in the capillary tube above the mercury, while for higher temperature ranges the capillary tube is filled with nitrogen or carbonic acid gas under high pressure. Researches carried on at Jena have resulted in the production of a special glass for thermometers, known as the Jena normal glass; this glass has practically the same coefficient of expansion as mercury, and hence is particularly suitable for thermometers.

Correction for Stem Exposure. Thermometers are usually graduated to read correctly for total immersion; that is, with the bulb and stem at the same temperature. However, in general power plant measurement work it is seldom that the bulb and stem are at the same temperature; therefore, in order to obtain the correct temperature a "stem correction" must be applied. The stem correction (K) may be calculated from the formula:

$$K = 0.000088\ n\ (t_1 - t) \qquad (36)$$

in which n is the number of degrees of the scale reading not immersed, t_1 the indicated temperature, and t the mean temperature of the air surrounding the stem as shown by a second thermometer.

Calibration of a Thermometer. When a thermometer is intended for exact work, its two fixed points, viz: the freezing point and boiling point, should be verified, and the graduations calibrated. To test for the accuracy of the graduations, a short column of the mercury in the stem, say 15 or 20 degrees in length, is detached by jarring, and its length measured in successive positions through the entire length of the stem by means of the scale marked thereon. Where the capillary tube is relatively narrow, the thread of mercury will be correspondingly long, and thus by its changes in length the irregularities in the thermometer tube can be determined and a calibration curve deduced.

Thermometer Wells. A thermometer well is used in measuring the temperature of steam or water when it is impossible to immerse the thermometer bulb directly. A well generally consists of a hollow plug, threaded at the upper end. It is screwed into a threaded hole in the top of the horizontal pipe through which the steam or water flows, the lower part of the well extending vertically into the interior of the pipe as far as the center, if practicable. The inside diameter of the well should be slightly larger than the outside diameter of the thermometer tube. The well should be filled with mercury or high grade mineral oil for temperatures below 500°, and with soft solder for higher temperatures. For superheated steam, the immersed portion of the well should preferably be fluted so as to increase the area of absorbing surface.

Alcohol Thermometers. The low limit for mercury thermometers is about —38 degrees Fahr. Hence, when it is necessary to measure lower temperatures, the alcohol thermometer is employed, in which alcohol or petrol ether is substituted for mercury as the expanding fluid.

Electrical Resistance Thermometers are based on the variation of the electrical resistance of certain metals with the temperature. Platinum has a uniform resistance, and withstands high temperatures, hence is often used for this work. The resistance thermometer is made of a coil of pure annealed platinum wire wound upon a mica framework. The variation in resistance is measured by a Wheatstone bridge. Inasmuch as small currents are used with this device, delicate galvanometers are required.

Thermo-electric Pyrometers, Fig. 185, are based upon the fact that when wires of two different metals are joined at one end and heated, an electromotive force will be set up between the free or cold ends of the wires. The combination of two such wires is known as a thermo-couple. The voltage

so set up, when the "hot" end is at a higher temperature than the "cold" end, usually increases as the temperature difference increases and may be measured by a sensitive galvanometer or voltmeter.

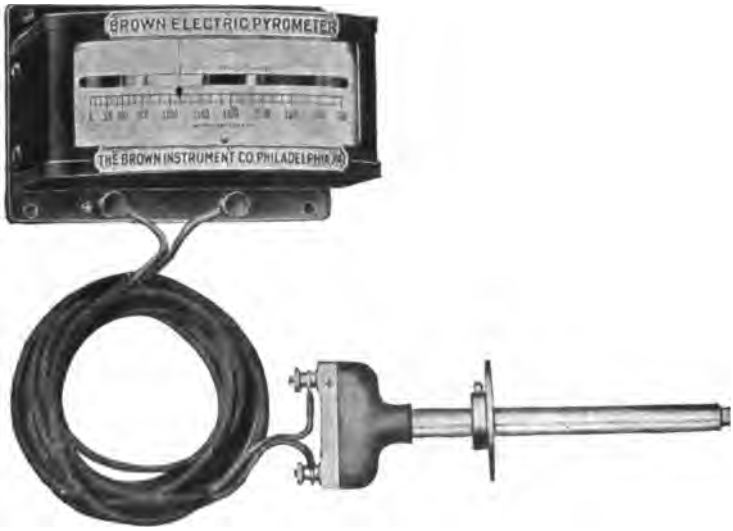

Fig. 185. Thermo-electric Pyrometer.

There are two general types of thermo-couples, viz: high resistance and low resistance. The high resistance couple is formed of platinum and platinum-rhodium wires of small diameter and is often called a rare metal couple. Base metal or low resistance couples are made of iron versus constantan, chromel versus alumel and various other special patented alloys that are obtainable in sizes of No. 6 or 8 B. W. G. Platinum and platinum-rhodium couples may be used up to a temperature of 3500° F., while base metal couples are not suitable above 2000° F., though their safe working temperature depends on the character of the alloys used.

Thermo-couples, whether of the rare metal or base metal types, should preferably be housed in protecting tubes. Iron pipe will satisfactorily serve as a protecting tube up to 1500° F., but above this temperature, special alloy, quartz or porcelain tubes should be used.

Mechanical Pyrometers, Fig. 186, depend for their action upon the different rates of expansion of two different substances, that are generally in the form of iron and brass, or graphite and iron rods. The movement of the rods resulting from expansion is multiplied by gears and levers and communicated to an indicating dial graduated in degrees. These pyrometers sometimes find application in the determination of boiler flue gas temperatures. They should be frequently calibrated, although at best they give unreliable results.

A peculiarity of these mechanical pyrometers is apt to be disconcerting if the inexperienced observer is not warned. On placing in a flue, the outer element expands first and causes the pointer to indicate a very low temperature, after which it rises to the proper temperature as the inner element becomes heated. On withdrawing the instrument, the outer element cools first and causes the pointer to indicate a very high temperature until the inner element cools. Owing to this peculiarity, they are obviously unreliable where there are wide temperature fluctuations.

Fig. 186. Mechanical Pyrometer.

Fig. 187. Recording Vapor Thermometer.

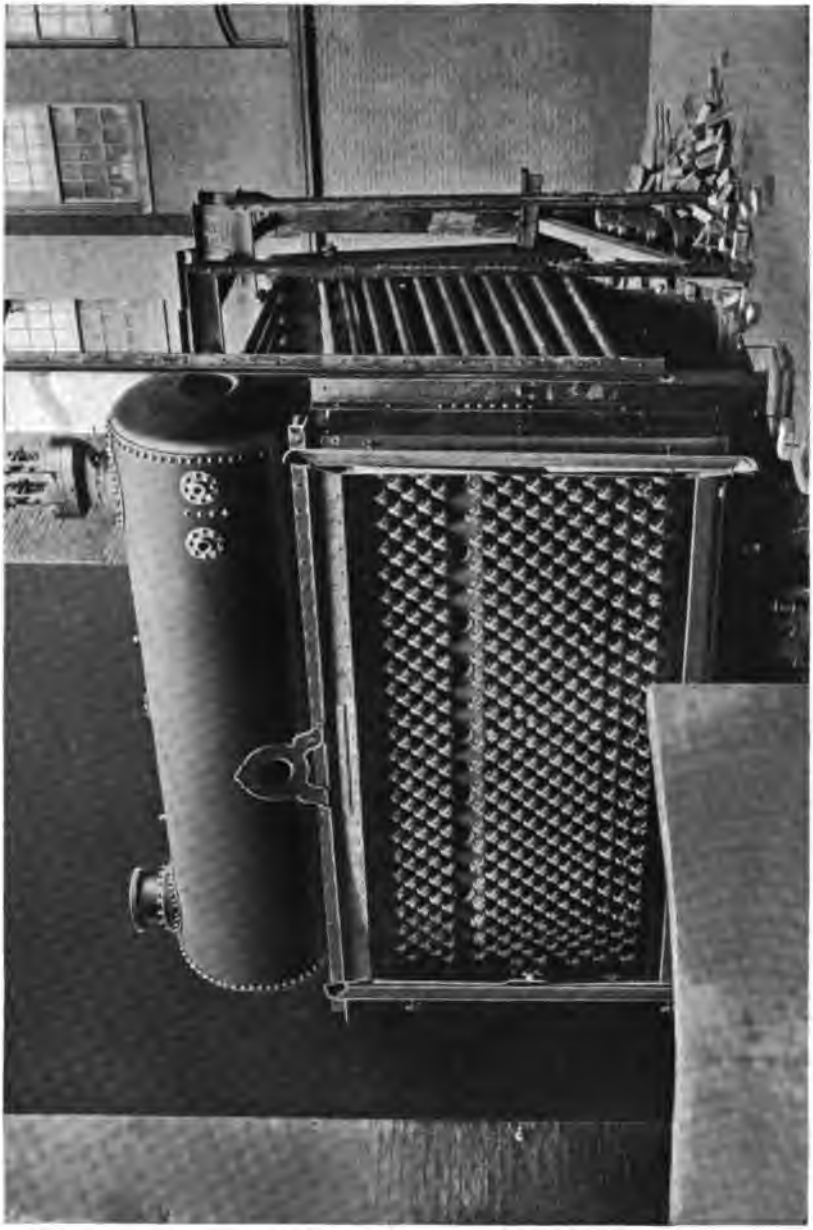

Heine Cross Drum Boiler of 437 H. P., in course of erection at the plant of the Phoenix Underwear Co., Little Falls, N. Y.

Vapor Thermometers, Fig. 187, operate by the expansion of ether, mercury, or other liquids confined in a steel bulb and capillary tube, to which is connected a measuring or indicating device. When the bulb is heated, the vapor tension increases and operates the indicating or recording mechanism. The capillary tube of such a thermometer may be as much as 100 ft. long, hence these instruments are suitable for use when it is desired to have the recording device located on an instrument board at some distance from the point where the temperature is taken. This type of thermometer is used in the boiler room for the measurement of feed water and superheat temperatures.

Radiation Pyrometers are instruments devised to measure temperature by means of radiation from incandescent bodies. In one type of radiation pyrometer (Féry) the heat rays are focused by means of a series of mirrors upon the hot junction of a thermo-couple and the electromotive force so generated is indicated by a sensitive galvanometer graduated to read temperature directly. These instruments, if used correctly, will measure fairly accurately the temperature of fuel beds or furnaces, but their application in the boiler room has been limited.

Optical Pyrometers are not used in boiler room practice, but serve rather to measure the temperature of small hot bodies. The Féry optical or absorption pyrometer measures temperature by focusing the heat rays by means of a series of mirrors and comparing the intensity of light emitted from the furnace with the light from a small comparison lamp.

Seger Cones find little or no use in the boiler room, their use being restricted chiefly to the ceramic industries. Seger cones are small pyramids, consisting of various mixtures of quartz, feldspar, etc., and forming a scale with differences of 50 to 80 degrees F. between fusion or softening points. The cones are numbered in such a way that No. 1 melts at 2102 deg. F., No. 022 melts at 1094 deg. F., and No. 42 melts at 3578 deg. F. To determine the temperature of a kiln or furnace, three or four consecutively numbered cones are placed upon a fire brick and introduced into the heated zone. The temperature indicated lies between the temperature of the cone, which still stands upright, and the temperature of the next one, which has begun to soften.

Color as a Temperature Indicator. The color of many highly heated substances is an indication of the temperature. Results, however, obtained by this method are unsatisfactory, except for rough estimation, as the susceptibility of the observer's eye and the surrounding illumination are sources of considerable error. Table 50 gives a schedule for judging temperatures in this way.

Table 50. Pouillet Color Schedule.

Appearance	Deg. F.
Incipient red	980
Dull red	1290
Incipient red cherry	1470
Red cherry	1650
Clear red cherry	1830
Deep orange	2010
Clear orange	2190
White orange	2370
Bright white	2450
Dazzling white	2730 2910

Units of Heat Quantities

THE *British thermal unit* (B.t.u.) is the amount of heat required to raise a pound of water one degree Fahrenheit in temperature. It makes little practical difference at what part of the scale this one degree lies, but the "mean B.t.u.," adopted as the standard, is $^1/_{180}$ of the heat required to raise a pound of water from 32 to 212 deg., which is approximately equal to the heat required to raise it from 63 to 64 deg.

The mechanical equivalent of heat is the amount of work that can be produced from or is convertible to a unit of heat. Many scientists have conducted tests in which mechanical work was entirely converted into frictional heat; these tests have been checked by calculations, and it has been determined that 1 British thermal unit = 778 ft.-lb. of work. The more accurate value is 777.52, at a point (such as latitude 45 deg.) at which g, the acceleration of gravity, equals 32.174 ft. per second per second.

The heat contained in a body is a function of its mass, its temperature and its specific heat, or heat capacity. The *specific heat* of a substance is the amount of heat required to raise a pound of it 1 deg. in temperature. The specific heat of water is therefore 1 B.t.u. at 63 deg. The specific heats of all other substances express their capacity as compared with water. The greater the specific heat of a substance, the more heat is required to increase its temperature through a given range, and the more heat it will give up when cooled. The specific heat of a solid body can be determined by heating it and immersing in water. The heat lost (as measured by the increase in temperature of the water) divided by its mass and its decrease in temperature, gives the specific heat. This is practically constant for solids, but varies slightly with temperature for liquids, and considerably in the case of gases. The calculation of the British thermal units involved in heating water is therefore simple; more extensive data are required to calculate the heat for vaporizing water, superheating steam, or that lost in flue gases.

The specific heats of several common solid substances are given in Table 51 by *Lucke*.

Table 51. Specific Heats of Solids.

Solid	Specific Heat
Amorphous carbon	0.1170
Cast copper	0.1138
Brick work, masonry, stone	0.1298
Coal	0.16 to 0.18
Wood	0.45 to 0.65
Glass	0.2 to 0.241
Cast Iron	about 0.2
Wrought Iron at 62 deg.	0.0924
Steel at 32 deg.	0.241

A discussion on the specific heat of gases occurs later in this chapter.

Heat Transfer

A WARM body has a constant tendency to pass over its heat content to a cooler one, and as their temperatures approach, the net rate of transmission decreases proportionately, until it reaches zero. Heat is transferred by three distinct processes: radiation, conduction, and convection.

Radiation is the direct passage of heat energy in the form of rays through space or through a diathermanous medium. Solar heat travels by radiation, and is converted into sensible heat on striking the earth. Heat is radiated

from the burning fuel and gases in a furnace, and the portion that strikes the boiler tubes aids materially in evaporation.

Conduction is the passage of heat between substances in actual contact. In homogeneous bodies the heat transmitted varies directly as the area and temperature differences of the two surfaces under consideration, and inversely as the thickness. Transfer rates can also be estimated or determined experimentally for combinations of materials, such as metal coated with scale, or with grease and soot. All heat used in evaporating water in a boiler must necessarily pass by conduction through the clean or coated metal.

Convection is the transfer of heat by the motion of the fluid containing it. In traversing the heating surfaces of a boiler the hot gases give up heat by convection to the metal of the tubes from which it passes by convection to the water in circulation.

Radiation

RADIATION takes place constantly from all bodies, even though they may be cooler than their surroundings. The net gain or loss by radiation is the difference between the heat received and that emitted. The standard of comparison is the performance of an ideal "black body," one that would absorb all radiation incident upon it, and would radiate heat at the maximum rate. The British thermal units emitted by radiation from a "black body," per square foot per hour, by Stefan's formula equal $1600T^4/10^{12}$, when T is the absolute temperature of the body, in degrees Fahrenheit. With all real bodies receiving heat by radiation, a portion is reflected, and if the body is at all transparent to radiation, a portion is transmitted. The absorption factor, the ratio of the heat absorbed to that incident, is equal to the emission factor, which is the ratio of the emissivity (radiating ability) to that of a perfect black body. The emissivities given below are for use in Stefan's formula, the values being substituted for the 1600 used for a black body:

Table 52. Radiation Constants.

Body	Constant
Black body	1600
Rough cast iron, oxidized	1570
Dull wrought iron, oxidized	1540
Lamp black	1540
Rough white lime plaster	1510
Water	1120
Polished wrought iron	467
Clay, smooth	650
Dull brass	362
Slightly polished copper	278

The rougher a body is, and the darker it is when in the cold state, the higher is its radiative and absorptive power.

The net heat transfer between two bodies depends upon their temperatures, on the character of their surfaces as affecting their emissivities, and on the angle of exposure. For two "black bodies" with parallel faces exposed to each other, the heat transfer is

$$H = \frac{1600}{10^{12}} (T_1^4 - T_2^4) \qquad (37)$$

H = Heat, B.t.u., per hour per sq. ft.
T_1, T_2 = Temp. of hot and cold bodies, abs. deg. F.

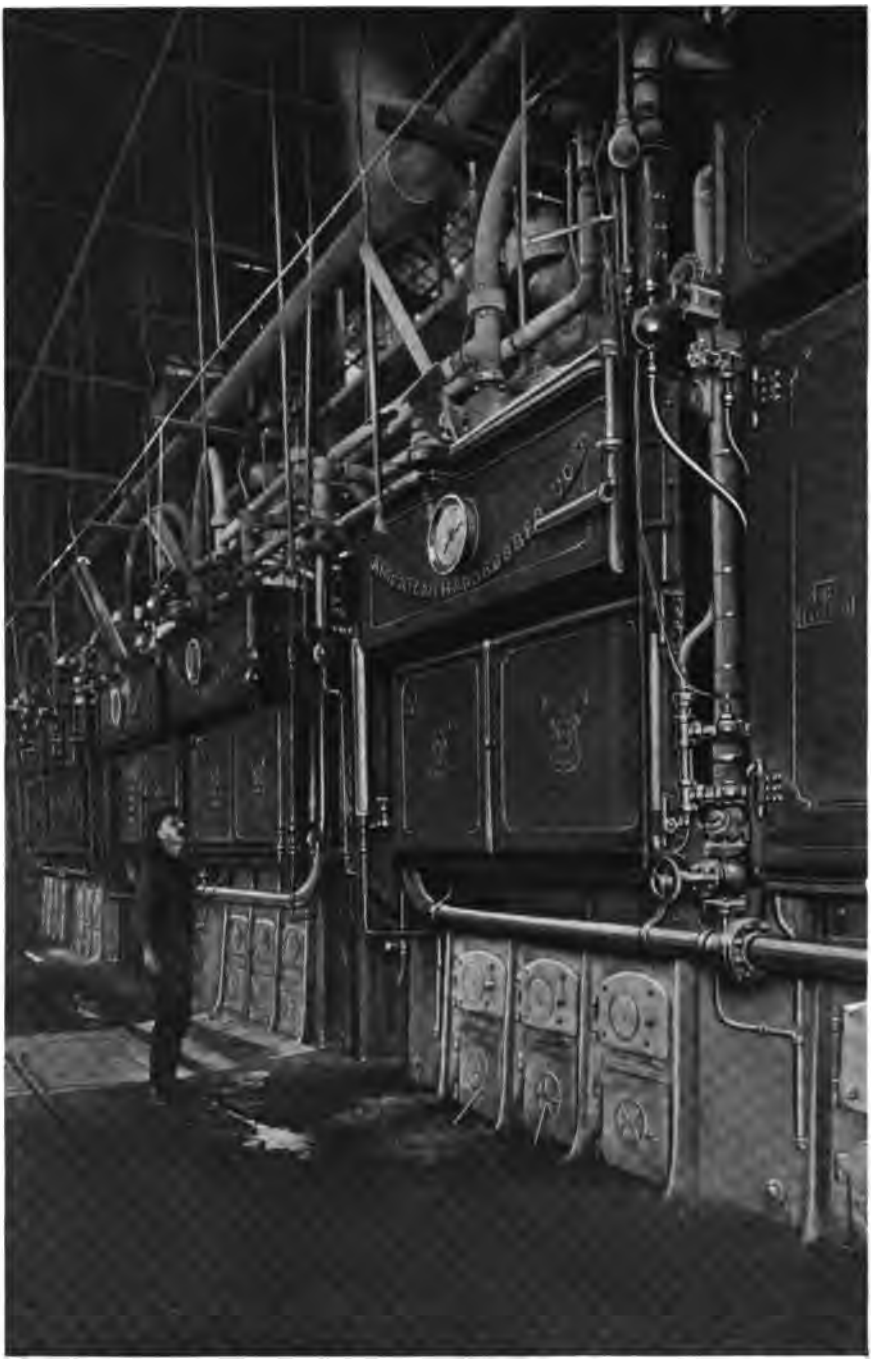

1725 H. P. Installation of Heine Boilers in the plant of the American Hard Rubber Co., College Point, Long Island, New York.

The temperature of a point exposed to radiation in a furnace setting can be determined by this law. Take for example a point so located on the side wall so that its angles of exposure to the fuel bed and to the boiler tubes are equal, the bed and tube temperatures being 2500 and 500 deg. respectively. As the point is at a uniform temperature and practically unaffected by the gas travel, the heat which it receives by radiation from the fuel bed will be equal to that which it emits to the tubes. Taking 1600, 1500 and 1550 as the radiation constants of the fuel bed, firebrick and tubes respectively,

$$\frac{1600}{10^{12}} \times 2960^4 - \frac{1500T^4}{10^{12}} = \frac{1550T^4}{10^{12}} - \frac{1500}{10^{12}} \times 960^4$$

$$T = 2545 \text{ deg. abs.} = 2085 \text{ deg. F.}$$

which is the temperature of the given point in the side wall, as influenced by radiation.

Heat radiated to and from a surface in such a manner is often spoken of as "reflected," although the bulk of it is absorbed and then emitted.

The total heat transmitted to the tubes depends upon the temperature of the fuel bed, and upon the area of the fuel bed exposed to the tubes, rather than upon the total tube surface. The glowing carbon radiates heat at a rate almost equal to that of an ideal black body, and while the tubes receive radiant heat from the walls and the flame, as well as from the fuel bed, the net transfer can be closely approximated by inserting the fuel bed and the tube temperatures and the area of the effective fuel bed surface, in the "black body" heat transfer equation.

In a locomotive type furnace, the entire surface above and surrounding the fuel bed is heating surface, except the fire door, which covers only a small angle of the fire. The transfer by radiation is proportional, therefore, to the fuel bed area. In a furnace of this type having 40 sq. ft. of fuel bed at 2500 deg., the sheets being at 500 deg., the heat transferred by radiation would be

$$\frac{1600 \times 40}{10^{12}} \left(2960^4 - 960^4 \right) = 4{,}858{,}240 \text{ B.t.u. per hour.}$$

The height of the fire box would not affect the total transfer by radiation, as the entire fuel bed is exposed to the cool heating surface. If the height was 4 ft., and the total sheet surface 200 sq. ft., the heat transferred by radiation would be 24,291 B.t.u. per hour per square foot of heating surface.

With an externally fired boiler, each portion of the hot fuel bed is exposed to hot walls as well as to the cold boiler tubes, and the walls are exposed to the fuel bed and the tubes. In each view of Fig. 188, the angle *b*

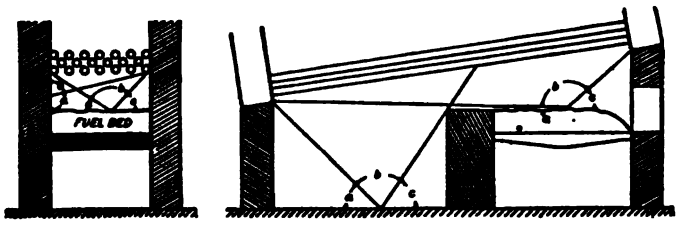

Fig. 188. Application of Radiation Law to an Externally Fired Boiler.

represents the exposure of a point on the fuel bed to the heat-absorbing tubes, and a and c the angles exposed to surfaces at temperatures approximating those of the fuel bed. By taking an average of $b/180$ at a number of points in the fuel bed and the walls, a measure of the *effective* radiating area of the hot surfaces can be ascertained. The right-hand member of the formula 37 (for heat transfer between two black bodies) can then be multiplied by this average, the result being the *average* net heat radiated by the hot surfaces to the boiler.

The higher the fuel bed temperature the more heat passes to the boiler surface as radiant energy instead of being carried by the gases as sensible heat. Fig. 189 shows the extremely rapid increase at high temperatures, the radiation being four to five times as great at 3500 deg. as at 2500 deg. absolute. Each curve is plotted for a constant temperature (as indicated) of the soot coating on the water-heating plates.

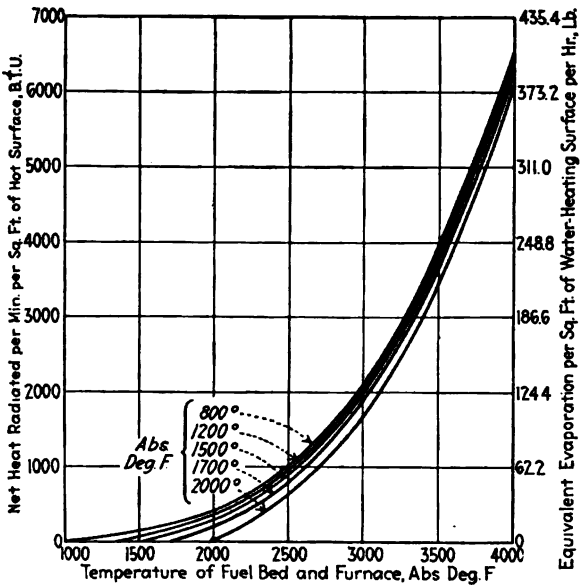

Fig. 189. Relation Between Furnace Temperature and Radiated Heat for Constant Temperatures (800, 1200, etc.) of the Soot Coating.

Tests by the University of Illinois on Heine boilers, with and without a baffle protecting the lower row of tubes, showed a much lower flue-gas temperature, and 3 to 5 per cent higher efficiency when the tubes were exposed to radiation. Little smoke was produced in this case, although if the amount of heat transferred by radiation is too great the fire is cooled, and combustion is incomplete.

A fuel bed under the boiler gives greater transmission by radiation than does a Dutch oven.

Up to the point where the products of combustion are cooled below the ignition temperature, any heat transmitted by radiation, instead of being carried by the gases, is clear gain. High transmission by radiation requires a large fuel surface exposed at a wide angle to the heating surfaces, and high temperature of the fuel bed surfaces. The latter, however, must not be so high as to damage the furnace lining or fuse the ash.

Conduction

CONDUCTION through a homogeneous solid is measured by the following formula:

$$H = \frac{C\,(t_1 - t_2)}{u} \qquad (38)$$

H = Amount of heat conducted = B.t.u. per sq. ft. per hour
C = Coefficient of conductivity = B.t.u. per sq. ft. per hour per degree difference between the temperatures of two parallel plane surfaces 1 inch apart
u = Distance between plane surfaces or thickness of substance
t_1, t_2 = Temperatures of the two plane surfaces

Values of C for different materials are given below in Table 53:

Table 53. Coefficients of Conductivity.

Material	Conductivity C
Copper	2638 } at 212 deg.
Aluminum	1428 } at 212 deg.
Wrought iron	412 } at 212 deg.
Soft steel	322 } at 212 deg.
Cast iron	314 } at 212 deg.
Hard steel	180 } at 212 deg.
Firebrick	9.0 at 1300 deg.
Water	4.35 at 86 deg.
Glass (soda, window glass)	4.5
Hydrogen	0.976 at 60 deg.
Air	0.165 at 32 deg.
Lamp black	0.215 at 212 deg.
Vacuum	0

The conductivity of solids varies slightly with temperature, iron decreasing by 0.0229 for each degree Fahrenheit rise. With gases it varies as the "constant-volume" specific heat and the viscosity at different temperatures.

That the metal offers only a small part of the resistance to heat flow is shown in boiler practice by actual rates of transmission. Consider, for instance, a boiler operating at the rate of 10 sq. ft. per equivalent boiler horsepower, corresponding to 3350 B.t.u. per sq. ft. per hour, with tubes $^1/_{10}$ in. thick. The conductivity of iron at 400 deg. is 408, and substituting in the conduction formula, we get

$$3350 = \frac{408}{0.1}(t_1 - t_2),$$

$$t_1 - t_2 = 0.82 \text{ deg. Fahr.}$$

Higher rates of driving involve greater temperature differences, but the drop through the metal never approaches the drop between the gases and the water. Scale and soot coatings add considerably to the resistance, but even if the combination offers ten times the resistance of a clean tube, the temperature drop is only 8.2 deg. through solid material. This serves to emphasize the possibilities of working the surface at high rates.

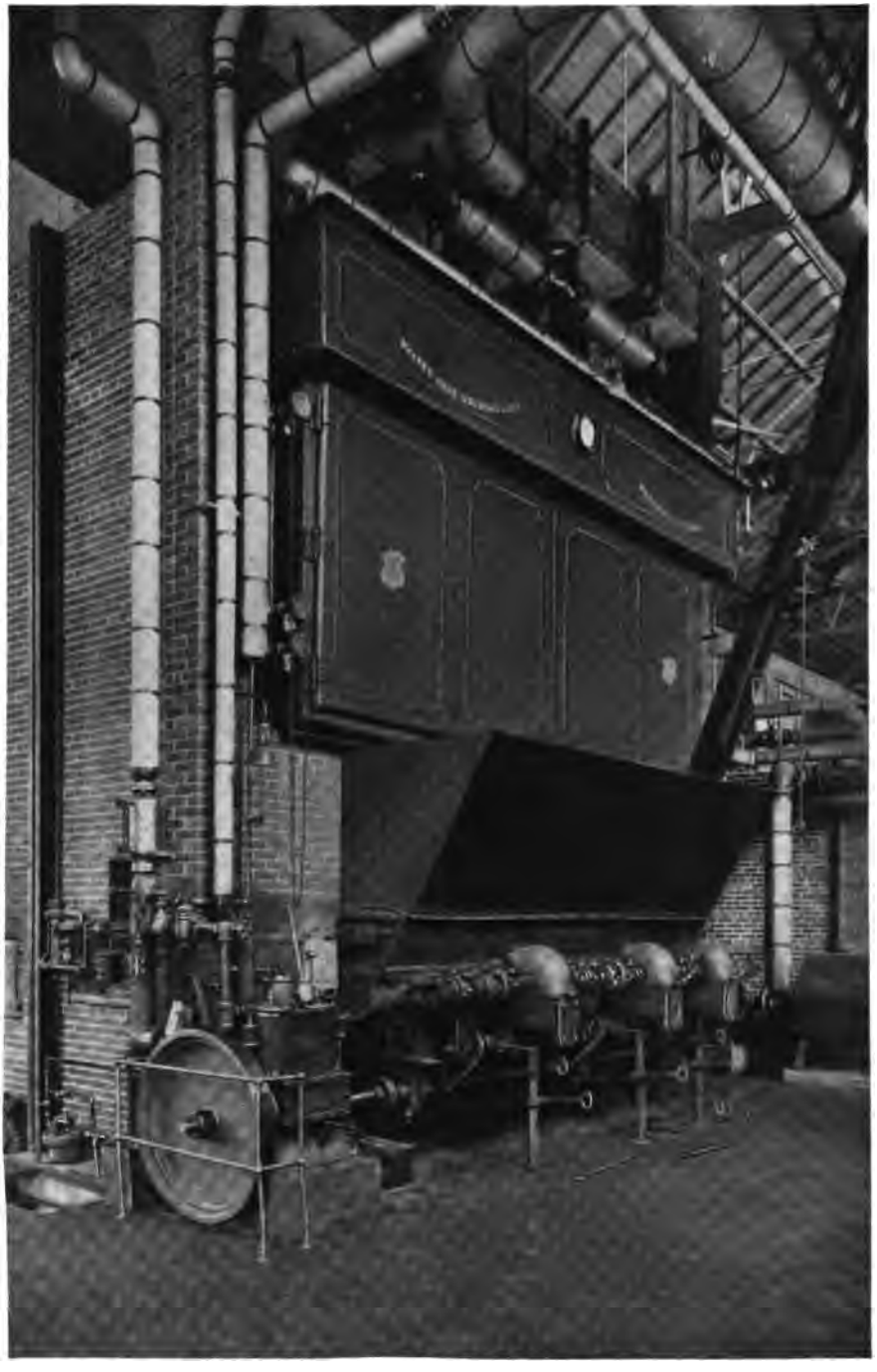

1000 H. P. Heine Standard Triple Drum Boiler, installed in the Walter Reed Hospital, Washington, D. C.

In a test on a Heine Boiler, the water surface of the ⅛-in. thick tubes was 41.5 deg. below the temperature of the gas surface. The heat conducted was, therefore,

$$\frac{408}{0.125} \times 41.5 = 136{,}000 \text{ B.t.u. per sq. ft. per hr.,}$$

corresponding to 4.05 boiler horsepower per square foot, or 0.247 sq. ft. per boiler horsepower.

Thermal resistance is the reciprocal of thermal conductivity, and the total resistance of several bodies through which the heat must pass, one after the other, is the sum of the individual resistances. A break in a substance creates a surface resistance, so that boiler seams in contact with the fire should be eliminated.

Convection

IN most boilers, the bulk of the heat is carried by the gases and by contact with the heating surface delivered to the boiler. This process is called convection.

While considerable work has been done to elucidate the subject of convection, it must be admitted that much research is still necessary.

Rankine's convection formula is based on the assumption that the rate of heat transfer is dependent simply upon the square of the difference in the temperatures of the gases and of the heating surface, and is independent of the velocity of the gases. This assumption is now generally rejected.

Many prominent scientists and engineers have made investigations that have provided interesting information. In 1874, *Professor Osborne Reynolds* formulated a law of heat transfer which may be expressed as:

$$R = a + b\frac{W}{A} \qquad (39)$$

where R = B.t.u. transferred per sq. ft. of heating surface per hour per degree difference between the temperatures of gas and metal
W = Weight of gas per hour
A = Area of gas passage
a and b = Constants.

This law is based fundamentally on the rate of flow of the gas over the heating surface; it has been frequently and conclusively confirmed by Stanton, Nicolson, Jordan and others.

Jordan summarized the convection law of heat transfer as follows:

1. For a constant rate of mass-flow, the rate of heat transfer is proportional to the temperature difference between gas and metal.

2. For a given temperature difference, the rate of heat transfer increases with increasing gas velocity according to a linear law.

3. For a given gas velocity and a given temperature difference, the rate of heat transfer increases with the absolute value of the temperature.

4. The rate of heat transfer depends upon the condition of the heating surface.

5. The rate of heat transfer depends on the size of the channel through which the gas is flowing, the smaller the ratio of the area of the channel to the perimeter of the channel, that is, the smaller the hydraulic depth, the greater the ratio of heat transfer.

The value of a is influenced by the condition of the heating surface. It varies between 1.75 and 2.25. With reasonably clean surfaces, it is generally very close to 2.0, and this remains the case no matter what the circumstances may be.

The value of b is of the most importance. It is influenced by the hydraulic depth of the channel, and by the temperature. All ordinary conditions are met by writing $b = 0.001$. The effect of this, at say 2,000 and 4,000 pounds of gas per sq. ft. of gas passage area per hour, is:

$$2.0 + 0.001 \left(\frac{2{,}000}{1}\right) = 4 = R$$

and

$$2.0 + 0.001 \left(\frac{4{,}000}{1}\right) = 6 = R$$

Some take a much higher value of b with a consequently higher value of R; but as these higher values of R are not realized in practice when the radiation effect is eliminated, it is customary to make an arbitrary addition to the amount of heating surface so deduced.

Investigations now in progress by the Research Department of the *Heine Company* have yielded some surprising information. Under certain circumstances the value of b may be increased very considerably,—in some instances to as much as 0.004. To show the effect of this, the same gas rates as above are taken, namely, 2,000 and 4,000 pounds.

$$2.0 + 0.004 \left(\frac{2{,}000}{1}\right) = 10 = R$$

$$2.0 + 0.004 \left(\frac{4{,}000}{1}\right) = 18 = R$$

The amount of heating surface required is, of course, inversely proportional to R when radiant heat is not considered. So that when W/A = say 4,000 pounds, a boiler with $R = 18$ would have a heating surface only one-third of that of a boiler with $R = 6$, the capacity and efficiency being the same for both.

Lawford H. Fry has made a broad investigation of the work of experimenters in this line and has devised a formula which harmonizes the results of a large number of tests. This formula does not directly express the rate of heat transfer, but rather gives an expression for the rise or fall of temperature of a gas in its passage through a flue, the wall of which is at a higher or lower temperature than the gas. When the gas is hotter than the flue,

$$lolog \frac{T_1}{T_3} - lolog \frac{T_2}{T_3} = Mx \qquad (40)$$

where x = Distance along the flue from entrance
T_1 = Initial gas temperature, deg. absolute
T_2 = Exit gas temperature, deg. absolute
T_3 = Mean flue wall temperature, deg. absolute
M = Coefficient
lolog = Logarithm of the logarithm

Coefficient M depends on the flue dimensions and the rate of gas flow.

Fig. 190 is drawn from Fry's formula, and shows the relation of gas temperatures to proportion of heating surface passed over, with 2,500° initial and 450° exit temperatures in conjunction with a water temperature of 360°.

The application of the law of high gas velocity to waste heat boilers has been mentioned in Chapter 4 on FURNACES AND SETTINGS.

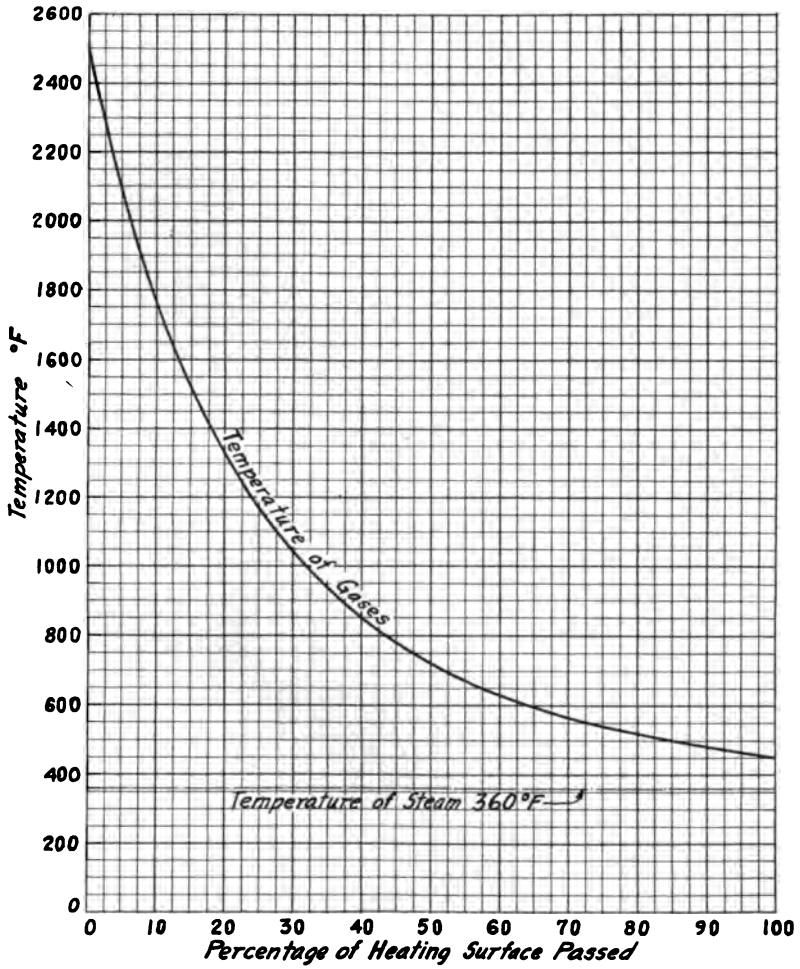

Fig. 190. Relation Between Temperature of Gases and Heating Surface Passed Over.

Three Heine Standard Boilers, in the American Express Co. Building, New York City, set over Detroit Stokers.

Temperature Drop in Boilers

FIG. 191 shows the results of tests by the *Bureau of Mines* on a Heine Boiler, operating at 4.4 lb. per square foot per hour, in which temperatures of both sides of the tube were taken. These tests also show the large temperature drop between hot gas and metal, and the small drop through the metal to the water; the temperatures at the 1½-hour point being as follows:

	Gases	Gas-side Surface	Water-side	Water
At beginning of path	2552	400	358	347
At end of path	688	352	349	347

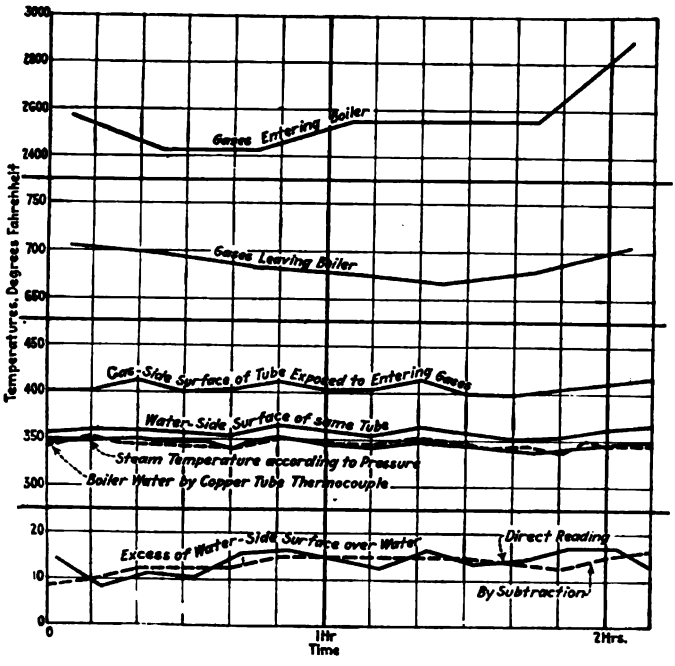

Fig. 191. Temperature Readings in Conductivity Test.

The transfer of heat from metal to water, if the circulation is sufficient, is rapid, because of the high specific heat of water. The high rate of heat transfer in condensers, which may be more than 1000 B.t.u. per sq. ft. per hour per deg. difference, illustrates this.

Combustion

COMBUSTION is the process of oxidation or the chemical union of an element with oxygen, and takes place with such rapidity that considerable light and heat are produced. The principal combustible elements in fuel are carbon, hydrogen and sulphur.

The oxygen necessary for the combustion of fuel is provided by the air, which is a mechanical mixture, not a chemical compound. Air consists principally of oxygen and nitrogen and contains small amounts of carbon-

dioxide, water vapor, argon and other rare and inert gases. These inert gases are ordinarily included with the nitrogen, so that the composition of air is generally given as:

	Per Cent by Volume	Per Cent by Weight
O_2	20.91	23.15
N_2	79.09	76.85

The chemical combination of oxygen with the combustible elements of fuels occurs in definite and invariable proportions—a law which may be better understood by the following brief references to elementary chemistry.

All substances, whether gaseous, liquid, or solid, are either elements, compounds or mixtures.

An element is a substance which cannot be reduced to a simpler form. Carbon, sulphur, oxygen, hydrogen, etc., are elements.

A compound is a substance which can be reduced into simpler forms or elements by chemical process. Water, carbon-dioxide, iron sulphide, etc., are chemical compounds.

A mechanical mixture contains one or more substances not held in chemical combination. Air, as mentioned above, is a mixture of the elements, oxygen and nitrogen, and the compounds carbon-dioxide, water vapor, etc.

Molecules. If an element or compound be divided and redivided into particles, until the limit is eventually reached where the substance can not exist by itself without losing its characteristics, that particle is known as a molecule. If such a molecule be dissociated into its component elements, these elements are known as atoms. The elements are represented in chemical nomenclature by letters, such as H for hydrogen, C for carbon, Fe for iron, etc., etc. Compounds are represented by groups of letters with subscripts which indicate the numbers and kinds of atoms contained in the molecule. For example, the symbol H_2O for water indicates that two atoms of hydrogen and one atom of oxygen comprise one molecule of water. Atoms seldom exist uncombined, hence the symbols for oxygen, nitrogen, etc., are written O_2 and N_2, which indicate that there are two atoms in the molecules. Carbon exists in a number of different forms and hence there are many carbon molecules, each containing a different number of atoms. The latest investigations seem to indicate that the least number of atoms in any carbon molecule is twelve.

Atomic Weights. The atoms of different elements have different relative masses or weights. As hydrogen is the lightest, its atomic weight is generally given as 1 and the weights of other atoms referred thereto, but sometimes oxygen is given as 16 and used as the basis. Table 54 gives the atomic weights of those elements most frequently met with in the combustion of fuels.

Table 54. Atomic Weights.

Element	Symbol	Approx. Atomic Wts.	Accurate Atomic Wts.
Hydrogen	H	1	1.008
Carbon	C	12	12.005
Sulphur	S	32	32.07
Oxygen	O	16	16.00
Nitrogen	N	14	14.01

Molecular Weights. When two or more elements combine to form a compound, the relative weight of the molecule formed will equal the combined weight of the atoms which comprise it. For example, the water molecule, H_2O consists of one atom of oxygen (atomic wt. 16), and two atoms of hydrogen (atomic wt. 1). $16 + 2 = 18$, the molecular weight of water.

Significance of Atomic and Molecular Weights. When expressing any chemical reaction by an equation, the relative weights concerned in the reaction are obtained directly by using the atomic or molecular weights. For example:

$$\begin{aligned} C + O_2 &= CO_2 \\ 12 + 32 &= 44 \end{aligned}$$

These relative weights may be expressed in kilograms, tons, pounds or in any other unit of weight.

Where gases are involved, the relative number of molecules of the gaseous substance occurring in the reaction stand for the relative volume of that gas. Roman numerals are generally used to designate these relative volumes, which may be expressed in cubic meters, cubic feet, etc. For example, in the combustion of methane, one volume of methane unites with two volumes of oxygen to form one volume of carbon-dioxide and two volumes of water vapor.

$$\overset{\mathrm{I}}{CH_4} + \overset{\mathrm{II}}{2O_2} = \overset{\mathrm{I}}{CO_2} + \overset{\mathrm{II}}{2H_2O}$$

Heat of Combustion is usually expressed as the B.t.u. generated by the complete combustion of one pound of fuel. When elements or compounds enter into chemical combination with one another, heat is either evolved or absorbed; that is, the reaction is either exothermal or endothermal. The reactions in combustion practice are exothermal. When one pound of pure carbon burns completely to carbon-dioxide, 14,544 B.t.u. are generated. When carbon is not supplied with sufficient air for complete combustion, carbon monoxide is formed and only 4,351 B.t.u. are liberated. The presence of even a small amount of carbon monoxide in boiler flue gases indicates a waste of fuel since each pound of carbon in this *CO* has yielded less than one-third of its available heat. The effect of the presence of carbon monoxide in the flue gases on boiler and furnace efficiency is explained in Chapter 15 on TESTING and Chapter 16 on OPERATION.

Table 55 gives the weight and volumetric reactions and the heat evolved in the combustion of those elements or substances occurring in fuels.

Ignition Temperature. As defined above, combustion is characterized by the rapid chemical union of oxygen with the combustible substance. The rapidity or speed of the chemical reaction depends definitely on temperature. It is a well known fact that a lump of coal, even though surrounded by the requisite amount of oxygen for combustion, will not burn, unless it is at a relatively high temperature. So also for every combustible substance there is a definite temperature below which the substance will not oxidize or burn. This temperature, which is known as the ignition temperature, is given in Table 56 for various components of coal and for *CO*.

It is to be noted that the fixed carbon in coal ignites at a lower temperature than the volatile hydrocarbons. Carbon monoxide will ignite at about 1210 degrees F. Therefore, with poor firing, delayed or secondary combustion may take place if oxygen is mixed with the *CO* in the proper proportions at a temperature of 1210° or above.

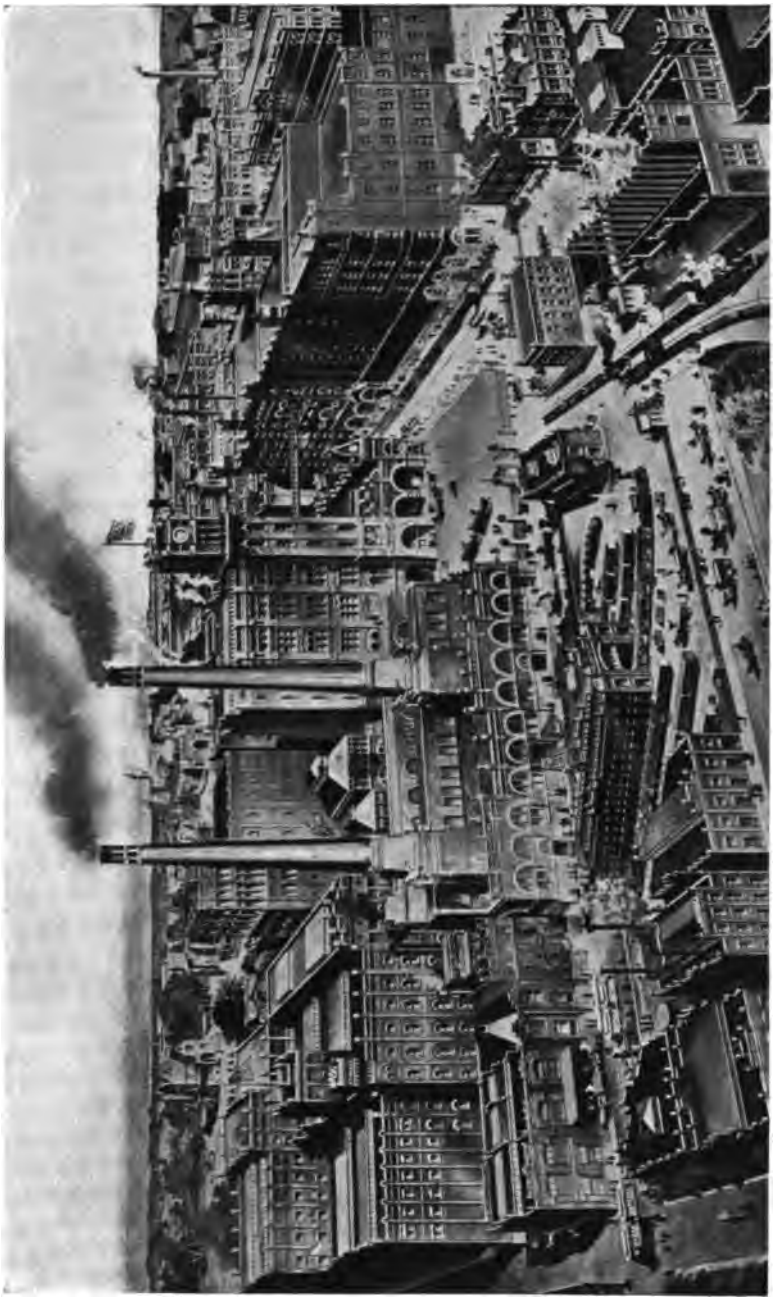

Anheuser-Busch Brewing Association, St. Louis, Mo.
This Company has installed 20,000 H. P. of Heine Boilers.

Table 55. Combustion Data.

Combustible Element or Compound	Molecular Symbol	Approximate Molecular Weight	Chemical Reaction	Volumetric Reaction	Heat Value B.t.u. per Lb.
Carbon	C	12	$2C+O_2=2CO$	$\overset{I}{2C}+\overset{II}{O_2}=\overset{II}{2CO}$	4,351
Carbon	C	12	$C+O_2=CO_2$	$\overset{I}{C}+\overset{I}{O_2}=\overset{I}{CO_2}$	14,544
Carbon monoxide	CO	28	$2CO+O_2=2CO_2$	$\overset{II}{2CO}+\overset{I}{O_2}=\overset{II}{2CO_2}$	10,193 (1) 4,369 (2)
Hydrogen	H_2	2	$2H_2+O_2=2H_2O$	$\overset{II}{2H_2}+\overset{I}{O_2}=\overset{II}{2H_2O}$	60,626 (3) 51,892 (4)
Sulphur	S_2	64	$S+O_2=SO_2$	$\overset{I}{S}+\overset{I}{O_2}=\overset{I}{SO_2}$	4,000
Sulphur	S_2	64	$2S+3O_2=2SO_3$	$\overset{III}{2S}+\overset{II}{3O_2}=\overset{II}{2SO_2}$	5,940
Methane	CH_4	16	$CH_4+2O_2=CO_2+2H_2O$	$\overset{I}{CH_4}+\overset{II}{2O_2}=\overset{I}{CO_2}+\overset{II}{2H_2O}$	21,555
Acetylene	C_2H_2	26	$2C_2H_2+5O_2=4CO_2+2H_2O$	$\overset{II}{2C_2H_2}+\overset{V}{5O_2}=\overset{IV}{4CO_2}+\overset{II}{2HO_2}$	21,000
Ethylene	C_2H_4	28	$C_2H_4+3O_2=2CO_2+2H_2O$	$\overset{I}{C_2H_4}+\overset{III}{3O_2}=\overset{II}{2CO_2}+\overset{II}{2H_2O}$	20,520
Ethane	C_2H_6	30	$2C_2H_6+7O_2=4CO_2+6H_2O$	$\overset{II}{2C_2H_6}+\overset{VII}{7O_2}=\overset{IV}{4CO}+\overset{VI}{6H_2O}$	20,365

Notes: (1) Per lb. carbon.
(2) Per lb CO.
(3) To water, high value.
(4) To steam, low value.

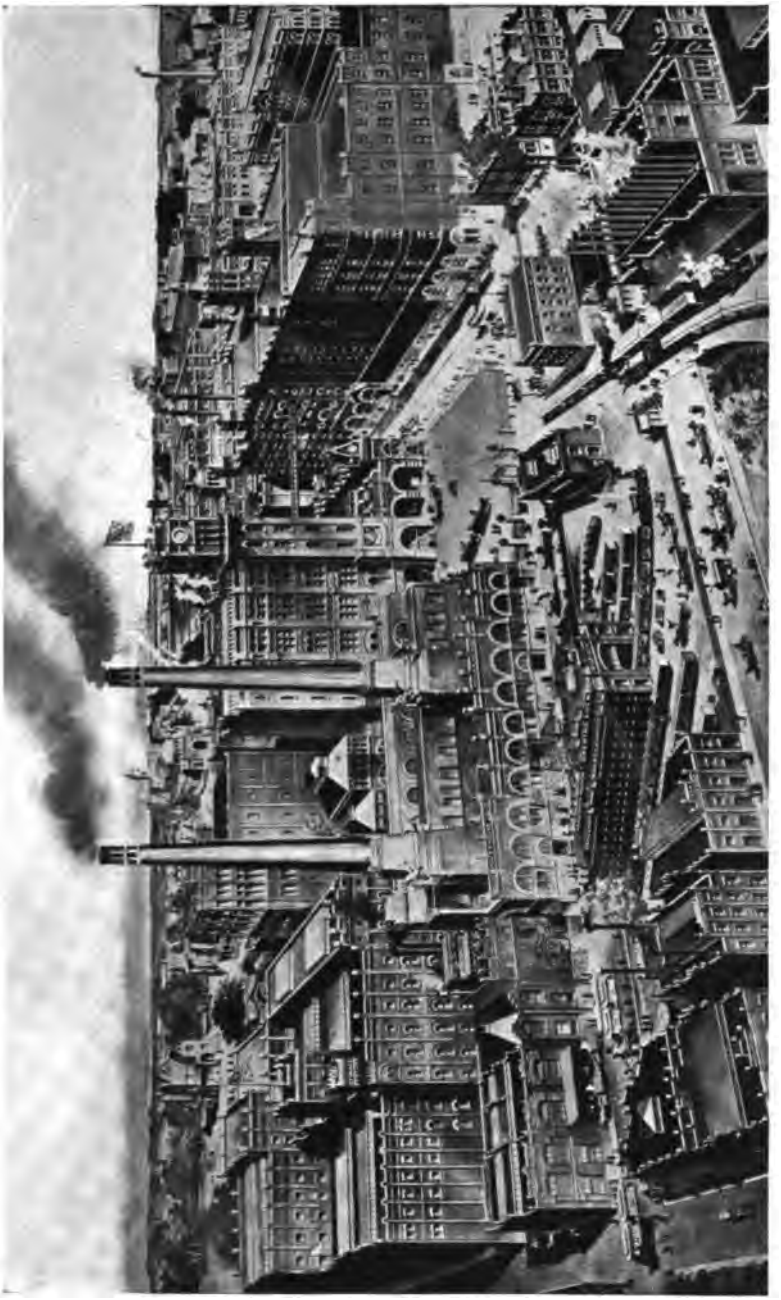

Anheuser-Busch Brewing Association, St. Louis, Mo.
This Company has installed 20,000 H. P. of Heine Boilers.

Table 55. Combustion Data.

Combustible Element or Compound	Molecular Symbol	Approximate Molecular Weight	Chemical Reaction	Volumetric Reaction	Heat Value B.t.u. per Lb.
Carbon.....	C	12	$2C+O_2=2CO$	$\overset{I}{2C}+\overset{II}{O_2}=\overset{II}{2CO}$	4,351
Carbon.....	C	12	$C+O_2=CO_2$	$\overset{I}{C}+\overset{I}{O_2}=\overset{I}{CO_2}$	14,544
Carbon monoxide.	CO	28	$2CO+O_2=2CO_2$	$\overset{II}{2CO}+\overset{I}{O_2}=\overset{II}{2CO_2}$	10,193 (1) 4,369 (2)
Hydrogen.....	H_2	2	$2H_2+O_2=2H_2O$	$\overset{II}{2H_2}+\overset{I}{O_2}=\overset{II}{2H_2O}$	60,626 (3) 51,892 (4)
Sulphur.....	S_2	64	$S+O_2=SO_2$	$\overset{I}{S}+\overset{I}{O_2}=\overset{I}{SO_2}$	4,000
Sulphur.....	S_2	64	$2S+3O_2=2SO_3$	$\overset{III}{2S}+\overset{II}{3O_2}=\overset{II}{2SO_3}$	5,940
Methane	CH_4	16	$CH_4+2O_2=CO_2+2H_2O$	$\overset{I}{CH_4}+\overset{II}{2O_2}=\overset{I}{CO_2}+\overset{II}{2H_2O}$	21,555
Acetylene.....	C_2H_2	26	$2C_2H_2+5O_2=4CO_2+2H_2O$	$\overset{II}{2C_2H_2}+\overset{V}{5O_2}=\overset{IV}{4CO_2}+\overset{II}{2HO_2}$	21,000
Ethylene.....	C_2H_4	28	$C_2H_4+3O_2=2CO_2+2H_2O$	$\overset{I}{C_2H_4}+\overset{III}{3O_2}=\overset{II}{2CO_2}+\overset{II}{2H_2O}$	20,520
Ethane.....	C_2H_6	30	$2C_2H_6+7O_2=4CO_2+6H_2O$	$\overset{II}{2C_2H_6}+\overset{VII}{7O_2}=\overset{IV}{4CO}+\overset{VI}{6H_2O}$	20,365

Notes: (1) Per lb. carbon.
(2) Per lb CO.
(3) To water, high value.
(4) To steam, low value.

Table 56. Ignition Temperatures.

Combustible Substance	Ignition Temperature Deg. F.
Fixed Carbon—Bituminous Coal	766
Fixed Carbon—Anthracite Coal	925
Carbon Monoxide	1210
Hydrocarbons	900-1200
Hydrogen	1130
Sulphur	470

Theoretical Furnace Temperatures may be calculated on the basis of the following formula:

$$t = t_1 + \frac{H}{W \times c} \qquad (41)$$

where t = Temperature of combustion
t_1 = Temperature of air
H = B.t.u. developed by combustion
W = Weight of products of combustion
c = Mean specific heat of products of combustion between t_1 and t.

The use of this formula involves a trial and error method in the determination of the mean specific heat of the products of combustion. The theoretical furnace temperatures calculated by the above formula or modifications of it have but little value to the engineer, as the actual furnace temperature is affected by variations in the rate of air supply, by the completeness of combustion, and by radiation from the fuel bed and flame to the cold surrounding surfaces. Actual furnace temperature will therefore always be lower than theoretical temperatures.

Air Theoretically Required for Combustion. Table 55 gives the combustion reactions which occur in the burning of fuel. From these, the amount of oxygen necessary and consequently the weight of air theoretically required can be readily calculated by means of the atomic weights of the substances involved.

The method of computing the air required for the combustion of carbon to CO_2 will be given in the following example, which is typical of the manner in which the results given in Table 57 are calculated.

From Table 55 it is observed that one atom of carbon unites with two atoms of oxygen to form carbon dioxide.

$$C + O_2 = CO_2.$$

From Table 54 it is noted that the atomic weight of carbon is 12 and of oxygen is 16, hence

$$12 + (2 \times 16) = 44.$$

or twelve parts of carbon by weight unite with thirty-two parts of oxygen by weight to form forty-four parts of carbon dioxide by weight. Now, if we consider one pound of carbon as being burned, the weight of oxygen necessary for combustion will be $^{32}/_{12}$ or 2.667 lbs.

Since air contains 23.15 per cent oxygen by weight, there will be required 4.32 lbs. of air to supply 1 lb. of oxygen. Then,

$$2.667 \times 4.32 = 11.52 \text{ lbs. air required.}$$

Table 57. Theoretical Air Requirements per lb. of Combustible.

Combustible element or Compound	Oxygen Required Pounds	Air Required Pounds	Air Required cu. ft. at 80° F.
Carbon to CO	1.33	5.76	78.4
Carbon to CO_2	2.67	11.52	156.5
CO to CO_2	0.57	2.47	33.5
Hydrogen	8.00	34.56	469.5
Sulphur to SO_2	1.00	4.32	58.6
Sulphur to SO_3	1.50	6.48	88.2
Methane	4.00	17.28	234.8
Acetylene	3.08	13.29	180.9
Ethylene	3.43	14.81	201.6
Ethane	3 73	16.13	219.5
Hydrogen Sulphide	1.41	6.10	83.0

The theoretical air requirements given in Table 58 are calculated on the basis of the approximate atomic weights. The *Bureau of Mines* gives the following formula for calculating theoretical air requirements, based upon the accurate atomic weights.

$$W = 0.1158\,C + 0.3448\,H - 0.04336\,(O - S) \qquad (41a)$$

where: W = lb. of air per lb. of fuel
C = Percentage of carbon, ultimate analysis
H = Percentage of hydrogen, ultimate analysis
O = Percentage of oxygen, ultimate analysis
S = Percentage of sulphur, ultimate analysis

The weight of air will be per pound of coal, per pound of dry coal, or per pound of combustible, according to the basis on which the analysis is reported.

Air requirements of typical coals were calculated by the *Bureau of Mines* formula as follows:

Table 58. Air Required per lb. of Coal.

COAL	B.t.u. per lb.	Coal by Analysis, Per cent				Pounds Air per lb. of fuel	Air per 10,000 B.t.u., Lb.
		C	H	O	S		
Lignite, poor	6,350	37.5	7.1	45.6	1.0	4.8	7.55
Lignite, good	7,190	41.3	6.8	40.8	0.9	5.4	7.52
Sub. bit., poor	9,210	52.5	6.1	34.1	0.3	6.7	7.38
Sub. bit., good	10,560	60.1	5.9	27.0	0.6	7.7	7.30
Bituminous, poor	10,960	60.1	5.4	17.9	4.9	8.2	7.49
Bituminous, good	14,130	78.0	5.3	11.5	0.6	10.3	7.29
Semi-bituminous, poor	14,120	80.7	4.6	4.6	1.0	10.7	7.60
Semi-bituminous, good	14,700	84.6	4.8	5.1	0.5	11.2	7.64
Semi-anthracite	13,700	80.3	3.6	3.6	1.7	10.4	7.62
Anthracite, poor	12,580	79.2	2.2	4.6	0.5	9.7	7.74
Anthracite, good	13,350	81.4	3.1	5.1	0.6	10.2	7.65

Ayer Mills, Lawrence, Mass., of the American Woolen Co., containing 5400 H. P. of Heine Boilers. This Company operates 21,200 H. P. of Heine Boilers and Heine Superheaters.

Table 58 shows that while the weight of air required per pound of fuel varies greatly with the composition of the coal, it is nearly proportional to the heat value. The weight may run from 7 to 12 lb. per pound of coal, and averages about 7.5 lb. per 10,000 B.t.u.

Air Actually Required for Combustion

IN practice it is necessary to supply more air than that theoretically required, owing to the products of combustion getting in the way when combustion is nearly complete. At the beginning of combustion in a theoretically perfect mixture of CO and air, CO and O_2 molecules will come together more frequently than when they are impeded by CO_2 molecules formed as combustion progresses. The last free molecules of CO and O_2 will probably not come together until the temperature has fallen below their combining or ignition point. Combustion, therefore, is always more intense in the earlier part of a flame and is languid at the tip. Mixing, agitation, or eddying of the gases will hasten combustion, but an excess of the O_2 molecules is still necessary to ensure complete combustion in a reasonable time; the more thoroughly the air is distributed and mixed with the combustible gases, the less excess will be required. Even in gas-burning installations, where the air is intimately mixed with the fuel, some excess air must be used, and appreciable time is required to complete combustion. This is shown by the CO present in the flue gases, if the comparatively cool heating surface is too close to the burner so that the flame reaches it and its tip is extinguished. The combustion space between the fire and the heating surface should, therefore, be ample, and should be so arranged that the gas stream is diverted and broken up. In coal burning furnaces an excess of at least 40 per cent, or 1.4 times the amount of air theoretically required, is usually necessary.

Products of complete combustion of fuels containing only carbon and hydrogen are carbon dioxide and water, as will be noted by reference to the reaction equation given in Table 55. The weights of these products may be readily calculated by the use of atomic weights, and the relative volumes will be noted in the volumetric equations in Table 55.

The volume of CO_2 resulting from the complete combustion of carbon is the same as that of the oxygen consumed, because each molecule of oxygen, O_2, takes up an atom of carbon to form a molecule of CO_2. Therefore, the CO_2 and the unused oxygen in the flue gases cannot possibly exceed the 20.9 per cent of the oxygen in the atmosphere. But the volume of CO resulting from incomplete combustion is twice that of the oxygen consumed, because each atom of the oxygen molecule takes up an atom of carbon to form a CO molecule, thus making two molecules of CO for each molecule of O_2. Therefore, if CO is present, the ($CO_2 + O_2 + CO$) in the flue gases can exceed 20.9 per cent. The steam which results from burning the hydrogen in the fuel condenses and does not show in the analysis, consequently the oxygen consumed disappears, and the highest possible proportion of CO_2 and O_2 in the flue gases is less than 20.9,—being about 19 per cent with bituminous coals.

The analysis of the products of combustion is discussed in Chapter 15 on TESTING.

Combustion Losses. In the combustion of fuel, certain losses occur which vitally affect boiler efficiency. These losses are (1) the loss due to the incomplete combustion of carbon, (2) the loss due to latent heat of moisture formed in the burning of hydrogen, (3) the loss due to unconsumed carbon in the refuse, and (4) the loss due to incomplete combustion of the volatile hydrocarbons. The determination of these losses, together with certain other losses, inherent in methods of boiler operation, such as heat carried away by chimney gases, heat lost by radiation, etc., is discussed under the subject of the heat balance in Chapter 15 on TESTING.

Properties of Gases

THE general law for the effects of temperature and pressure on gases is represented by the following equation:

$$VP = RT \qquad (42)$$

V = Volume, cu. ft. per lb.
P = Pressure, lb. per sq. in. absolute = gage pressure + 14.696
R = Constant, differing with the gas
T = Temperature absolute = deg. Fahr. + 460.

Equation 42 shows that the volume increases with rise in temperature and decreases with rise in pressure. With pressure unchanged, at temperature t_2 the volume is

$$\frac{V_1(t_2+460)}{t_1+460}$$

For constant temperature, at P_2 the volume $= V_1P_1/P_2$, where P_1 and P_2 can be expressed in pounds per square inch absolute, or in inches or millimeters of mercury.

When the desired value is to be derived from the volume under "standard conditions," V_1 is the volume at 32 deg. and atmospheric pressure, which corresponds to 492 deg. absolute and 14.696 lb. per sq. in. pressure (760 mm. or 29.921 in. of mercury).

Table 59. Physical Characteristics of Gases Involved in Furnace Work

	R	At 32° F. and atmospheric pressure		At 80° F. Lb. per cu. ft.
		V = cu. ft. per lb.	$\frac{1}{V}$ = lb. per cu. ft.	
Hydrogen, H_2	5.3140	177.900	0.00562	0.00512
Methane, CH_4	0.6682	22.372	0.04470	0.04083
Carbon Monoxide, CO	0.3826	12.809	0.07807	0.07113
Nitrogen, N_2	0.3824	12.801	0.07812	0.07127
Air	0.3701	12.390	0.08071	0.07353
Average flue gas	0.3555	11.920	0.08400	0.07650
Oxygen, O_2	0.3348	11.208	0.08922	0.08129
Carbon Dioxide, CO_2	0.2420	8.103	0.12341	0.11244
Sulphur Dioxide, SO_2	0.1635	5.473	0.18271	0.16646

The density, which is the reciprocal of the volume, decreases with rise in temperature and increases with higher pressure.

The changes in volume and density of the gases referred to in Table 59 are shown in Fig. 192.

Air containing the maximum amount of vapor for the existing temperature is said to be "saturated." Fig. 193 shows the weight of pure dry air for temperatures from 0 to 212 deg. at standard atmospheric pressure (14.696 lb. per sq. in.), also the weight of air and vapor in a saturated mixture under the same pressure.

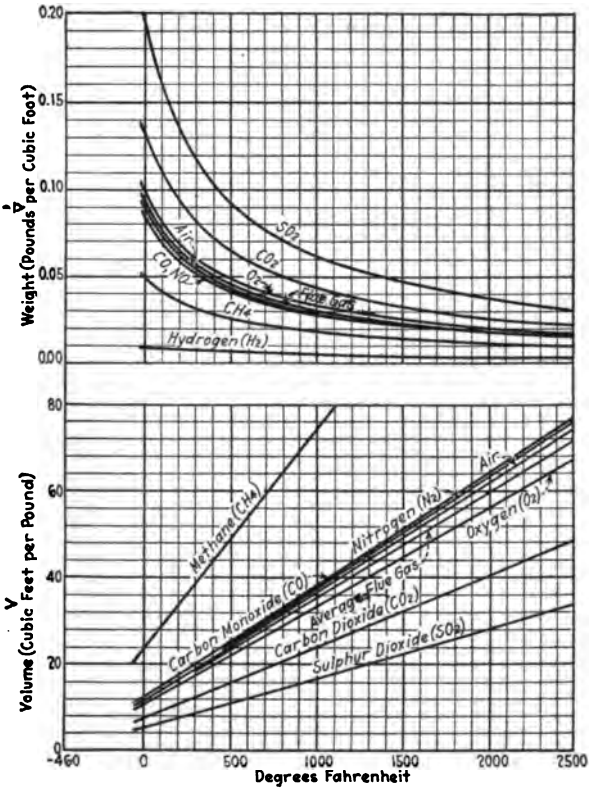

Fig. 192. Temperature in Relation to Volume and Density of Gases.

Table 60 gives the weight and volume of air at temperatures to 1000 deg., and pressures up to 100 lb. gage. Intervening values can be interpolated by the use of the general laws explained above.

Specific Heat of Gases. There is frequent necessity for the use of the specific heat of gases in the computation of combustion data. As defined in the units of measurements used in power plant work, the specific heat of a substance is the B.t.u. required to raise the temperature of one pound one degree. The specific heats of all substances, whether gaseous, liquid, or solid, vary with temperature. In the case of liquids or solids, there is little difference between the specific heats at constant pressure and those at constant volume. However, for gases there is considerable difference in the specific heats under these two conditions. The gases in combustion practice may be assumed to be at constant pressure.

Specific heats may be still further classified as being instantaneous or mean. The instantaneous specific heat of a substance is defined as the amount of heat required at a definite temperature to raise the temperature of a unit weight 1 degree. The mean specific heat of a substance for a given temperature interval, is the specific heat by which the temperature difference must be multiplied to determine the amount of heat necessary to raise a unit weight through the given temperature interval. The mean specific heat is generally used in the calculation of combustion data.

Table 60. Weight and Volume of Pure Air at Different Pressures.

Temperature, Degrees F.	Gage pressures as indicated.											
	0-lb.		5-lb.		10-lb.		20-lb.		50-lb.		100-lb.	
	w	v	w	v	w	v	w	v	w	v	w	v
0	.0864	11.60	.1160	8.62	.1455	6.88	.2040	4.91	.3800	3.63	.672	1.49
10	.0846	11.83	.1136	8.81	.1425	7.02	.1995	5.01	.3720	3.69	.658	1.50
20	.0828	12.08	.1112	8.99	.1395	7.16	.1955	5.12	.3645	2.75	.645	1.55
30	.0811	12.34	.1088	9.18	.1366	7.33	.1916	5.22	.3570	2.80	.632	1.58
32	.0809	12.38	.1084	9.23	.1360	7.35	.1909	5.24	.3560	2.81	.630	1.59
40	.0795	12.59	.1067	9.38	.1338	7.47	.1876	5.34	.3503	2.80	.619	1.62
50	.0780	12.84	.1045	9.57	.1310	7.64	.1839	5.44	.3432	2.92	.607	1.65
60	.0764	13.10	.1025	9.75	.1283	7.79	.1803	5.55	.3362	2.98	.596	1.68
70	.0750	13.35	.1005	9.95	.1260	7.94	.1770	5.65	.3302	3.03	.584	1.71
80	.0736	13.60	.0988	10.13	.1239	8.08	.1738	5.75	.3242	3.09	.572	1.75
90	.0723	13.83	.0970	10.32	.1218	8.21	.1707	5.86	.3182	3.14	.561	1.78
100	.0710	14.10	.0954	10.50	.1197	8.36	.1676	5.97	.3122	3.21	.551	1.83
110	.0698	14.35	.0937	10.69	.1176	8.51	.1645	6.08	.3070	3.26	.542	1.85
120	.0686	14.58	.0921	10.87	.1155	8.66	.1618	6.18	.3018	3.32	.533	1.88
130	.0674	14.86	.0905	11.07	.1135	8.82	.1590	6.29	.2966	3.38	.524	1.91
140	.0663	15.09	.0889	11.27	.1115	8.97	.1565	6.39	.2915	3.43	.516	1.94
150	.0652	15.36	.0874	11.47	.1096	9.13	.1541	6.49	.2865	3.49	.508	1.97
160	.0642	15.60	.0869	11.53	.1078	9.28	.1517	6.60	.2820	3.55	.499	2.01
170	.0631	15.86	.0846	11.83	.1062	9.43	.1493	6.69	.2775	3.61	.491	2.04
180	.0622	16.10	.0833	12.01	.1046	9.56	.1468	6.81	.2730	3.67	.484	2.07
190	.0612	16.37	.0820	12.21	.1029	9.72	.1447	6.92	.2690	3.72	.476	2.10
200	.0603	16.60	.0809	12.38	.1014	9.87	.1427	7.02	.2655	3.77	.470	2.13
220	.0585	17.12	.0785	12.75	.0984	10.17	.1383	7.24	.2675	3.81	.457	2.19
240	.0568	17.62	.0763	13.13	.0955	10.37	.1345	7.44	.2605	3.85	.444	2.20
260	.0553	18.10	.0742	13.50	.0930	10.77	.1307	7.62	.2435	4.11	.431	2.32
280	.0538	18.61	.0722	13.88	.0904	11.08	.1273	7.85	.2370	4.22	.420	2.38
300	.0523	19.13	.0703	14.25	.0881	11.37	.1237	8.09	.2300	4.35	.407	2.45
350	.0491	20.90	.0658	14.98	.0825	12.13	.1160	8.62	.2160	4.64	.382	2.62
400	.0463	21.65	.0621	16.11	.0779	12.85	.1090	9.18	.2035	4.92	.360	2.78
450	.0437	22.95	.0586	17.09	.0735	13.62	.1033	9.68	.1925	5.20	.340	2.95
500	.0414	24.20	.0555	17.73	.0696	14.38	.0978	10.23	.1820	5.50	.322	3.11
550	.0394	25.40	.0528	18.94	.0661	15.13	.0930	10.76	.1730	5.78	.306	3.27
600	.0376	26.63	.0504	19.90	.0631	15.87	.0885	11.31	.1650	6.06	.292	3.43
700	.0342	29.25	.0460	21.75	.0577	17.35	.0808	12.38	.1509	6.64	.267	3.75
800	.0316	31.70	.0424	23.65	.0531	18.85	.0745	13.44	.1390	7.20	.246	4.06
900	.0293	34.18	.0393	25.50	.0492	20.35	.0689	14.54	.1287	7.76	.227	4.41
1000	.0273	36.68	.0366	27.30	.0459	21.80	.0643	15.56	.1199	8.34	.212	4.72

Values in above table based upon pure air at atmospheric pressure (14.696 lb. per sq. in. or 29.92 in. mercury).
w = Weight in pounds per cubic foot. v = 1/w = Volume in cubic feet per pound.

There is considerable disagreement between the specific heats of gases as determined by many investigators. *Prof. G. B. Upton* collaborated the work of *Mallard, LeChatelier, Holborn and Henning, Langen, Pier* and others, and derived the formulas of Table 61, which are sufficiently accurate for engineering calculations.

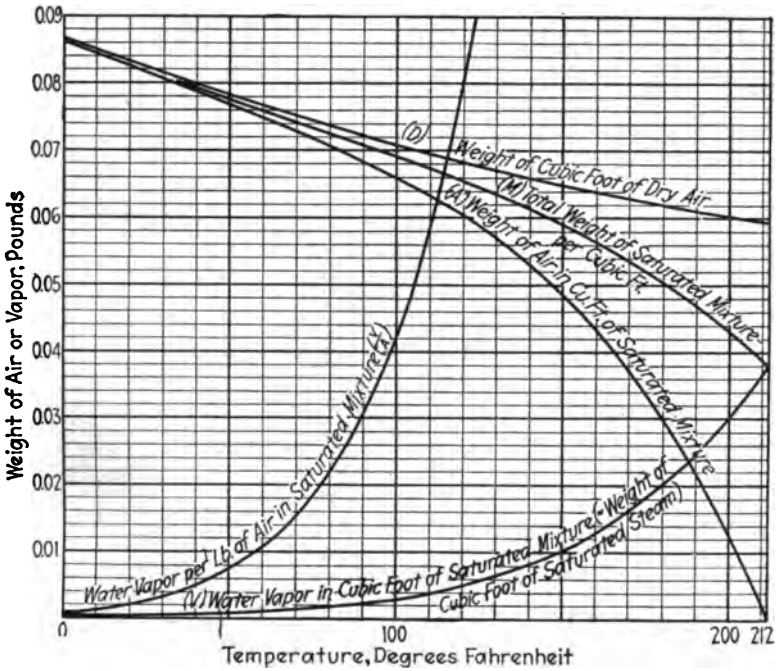

Fig. 193. Weights of Air or Water Vapor.

Table 61. Mean Specific Heat Formulas (Const. Press.)
Range $o°$ C to $t°$ C

Gas	Formula
O_2	$0.216 + 0.000014t$
N_2 and CO	$0.243 + 0.000019t$
CO_2	$0.200 + 75 \times 10^{-6}t - 21 \times 10^{-9}t^2 + 2.2 \times 10^{-12}t^3$
H_2	$3.369 + 0.00055t$
Air	$0.237 + 0.000019t$
Water Vapor	$0.452 + 7.4 \times 10^{-6}t + 92.6 \times 10^{-9}t^2 - 20.6 \times 10^{-12}t^3$

The curves, Figs. 194, 195 and 196, showing the mean specific heats at constant pressure of those gases most commonly met with in combustion practice, are based upon the formulas given in Table 61. Above a temperature of about 2000° F., the values are somewhat uncertain and the results are dependable only to the first two significant figures after the decimal point.

American Cocoanut Butter Co., Chicago, Ill., containing 1350 H. P. of Heine Standard Boilers and Heine Superheaters.

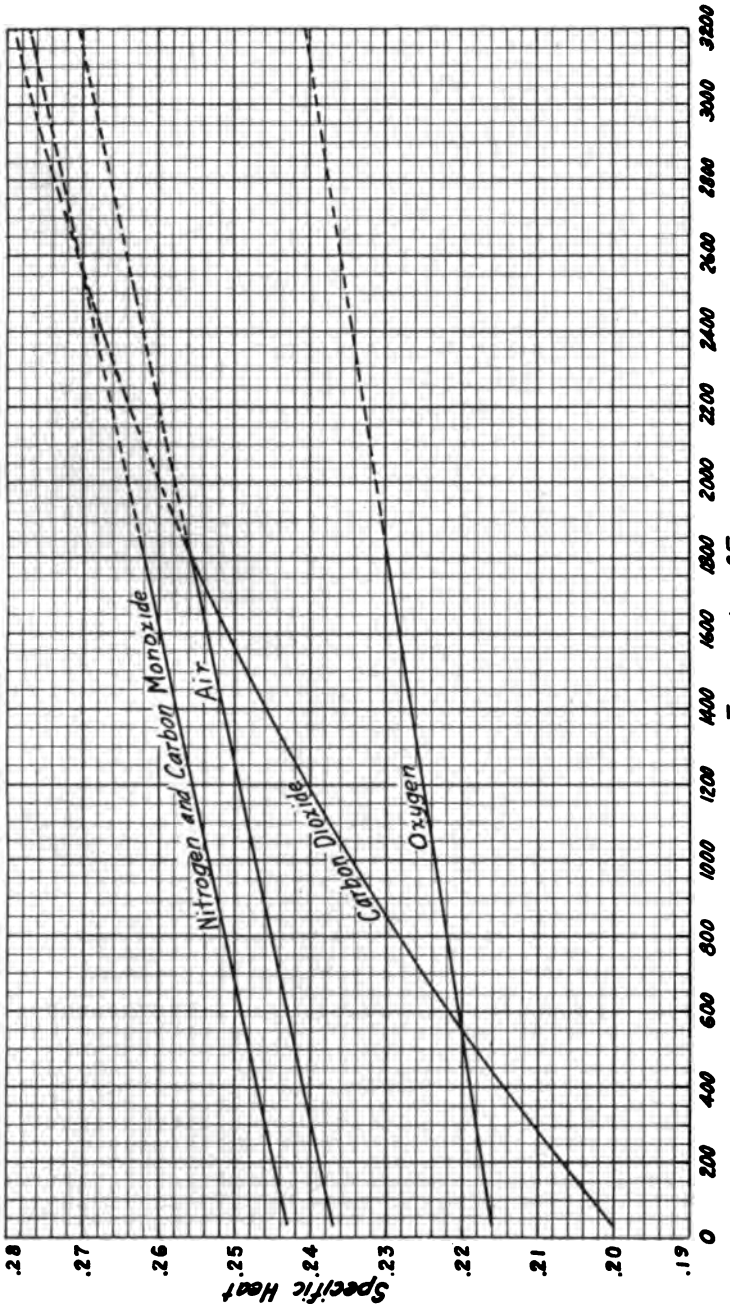

Fig. 194. Mean Specific Heats of Gases at Constant Pressure.

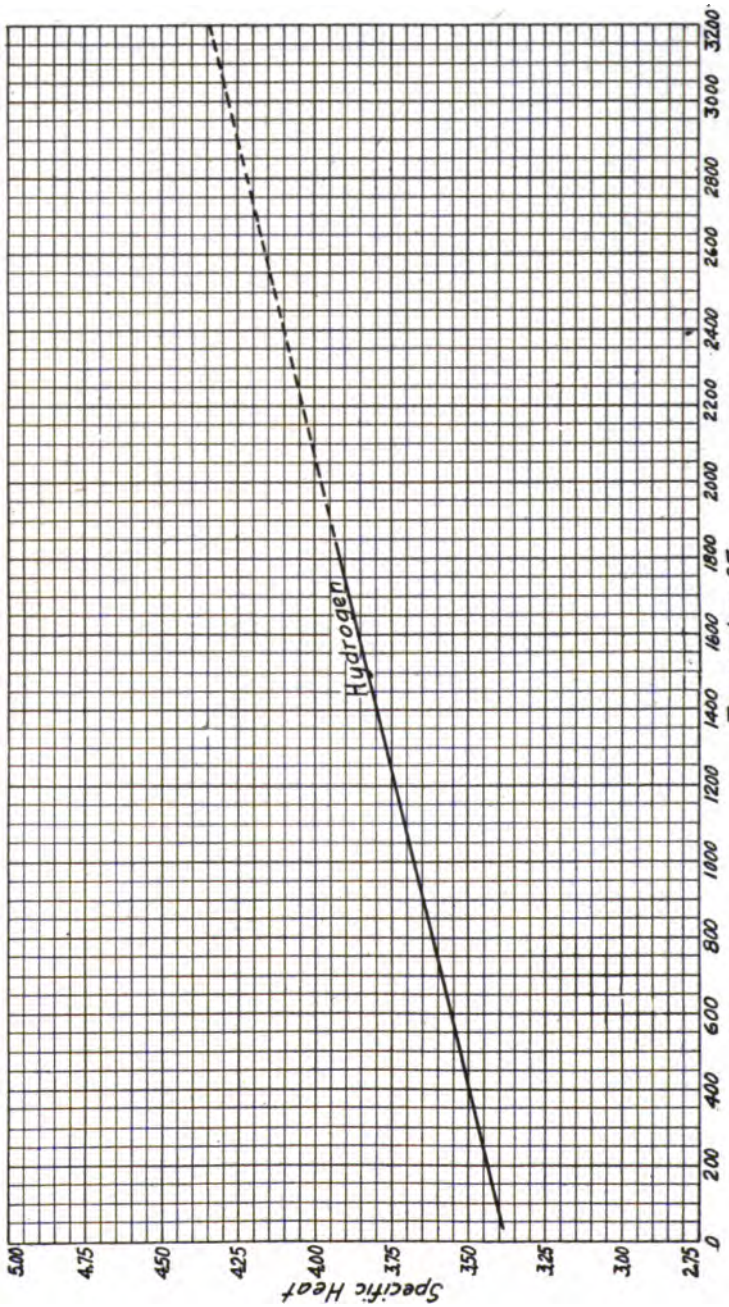

Fig. 195. Mean Specific Heat of Hydrogen at Constant Pressure.

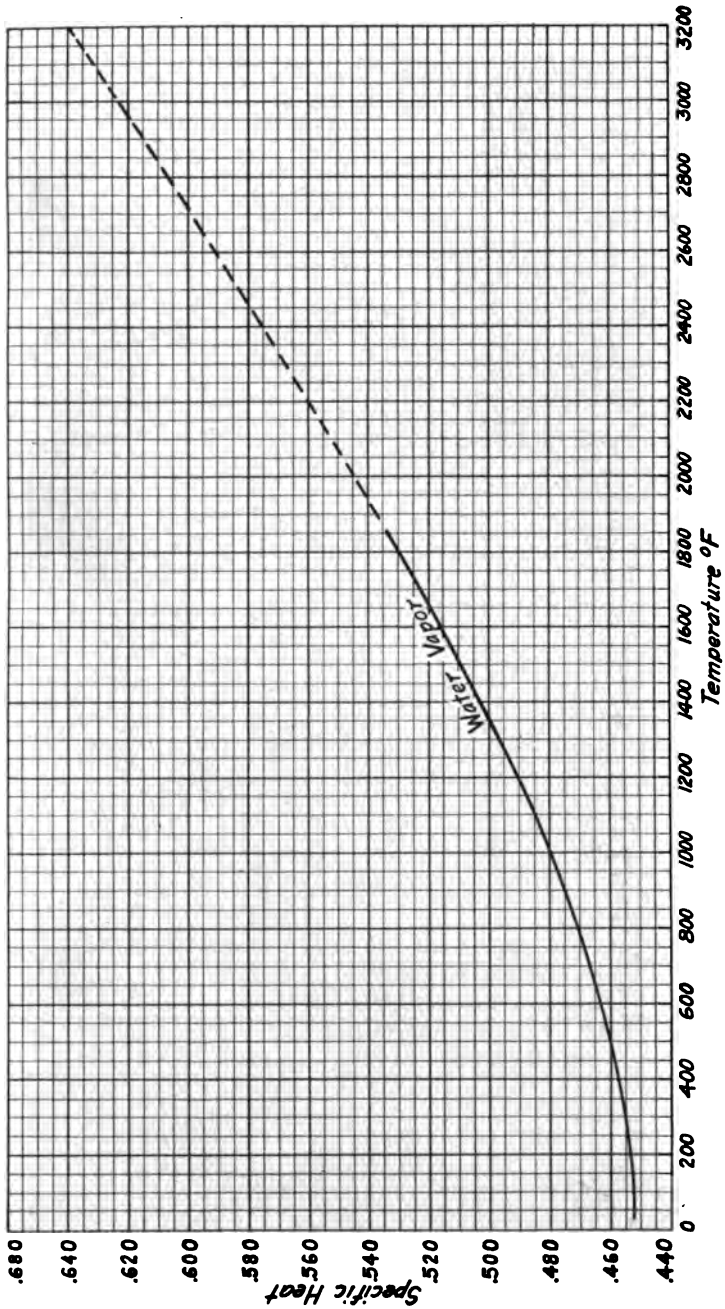

Fig. 196. Mean Specific Heat of Water Vapor at Constant Pressure.

A part of the 4500 H. P. Installation of Heine Standard Boilers set over Jones Underfeed Stokers in the Plant of the New York Mills Corp., New York Mills, N. Y.

CHAPTER 12

STEAM

Properties of Water Vapor

THE water used in the generation of steam may be present in the boiler plant in a number of different forms. It undergoes various transformations in the boiler or in the auxiliary apparatus used in the boiler plant. In this chapter the nature of water vapor is explained, and tables of the properties of steam are given, accompanied by a demonstration of their application to practical problems.

Entropy. In solving thermodynamic problems a mathematical ratio, considered as a property of substances and known by the name entropy, is of value. Most, if not all of such problems, can be solved without the use of entropy, but engineers are now generally convinced of its advantage. It should be thought of, however, simply as a mathematical expression.

It is difficult to give a comprehensive definition of this property. One that will answer the purpose here is that for any reversible operation an infinitesimal change of entropy is equal to an infinitesimal change in the quantity of heat divided by the absolute temperature at which that change takes place, the transformation being so small that no change of temperature can occur. Thus *changes* only, of entropy, can be measured. Expressed as an equation,

$$d\Phi = \frac{dH}{T} \tag{43}$$

in which Φ is the symbol for entropy, H for quantity of heat, and T for absolute temperature. Any finite change can therefore be found by integrating this expression between the proper limits. Rewriting it in the form, $dH = Td\Phi$, gives a simple expression for heat in terms of the temperature, an easily measured quantity, and of the change of entropy. Tables are calculated or charts constructed, giving changes of entropy. A measurement of the temperature and a knowledge of one other property, as the quality or volume, in order to determine the change of entropy, are all that are required to find the quantity of heat.

Isothermal Expansion. If a substance, while expanding, has sufficient heat added to it to keep the temperature constant, the process is termed "isothermal." The pressure and temperature of saturated steam will vary or remain constant together, while if an ideal gas expands with the temperature constant, the pressure varies inversely with the volume.

Adiabatic Expansion. This is an imaginary change supposed to take place in a substance placed inside of some vessel, as a cylinder, all the walls of which are of non-conducting material; consequently, no heat passes through the walls to the substance or away from it. It is isolated from all outside heat. Work can be done, however, by drawing on the energy already stored in the substance.

A reversible adiabatic is an imaginary change taking place without friction or other actual losses. When the direction of such a change is reversed, all the accompanying heat changes are reversed. Upon completion, everything affected by the heat changes in the original direction will be returned to its initial condition as far as heat is concerned. This applies to the working fluid and to substances outside as well. An expansion or compression of this nature takes place at constant entropy.

A part of the 3500 H. P. installation of Heine Boilers in the Equitable Office Building, New York City.

Characteristics of Vapors. When a substance changes from a liquid to a gaseous state it passes through an intermediate condition in which neither the laws of liquids nor those of gases are applicable. While in this intermediate stage, the substance is known as a vapor.

A saturated vapor is one that can exist in contact with its liquid; withdrawal of heat, however small the amount, will cause some of the vapor to return to its liquid form. The saturated condition extends therefore from the time when this vapor first begins to form from the liquid to the time when a state of complete vaporization is reached.

The vapor is dry-saturated just at the instant of complete evaporation. During the process of vaporization it is known as wet-saturated vapor.

When a dry-saturated vapor is further subjected to heat, its characteristics gradually approach those of a gas and it is then said to be in a superheated state.

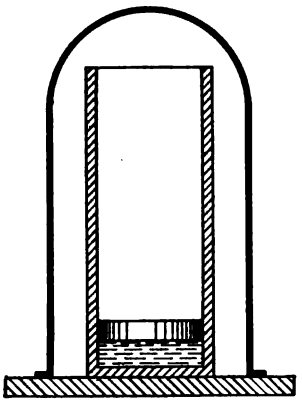

Fig. 197. Perfect Vacuum surrounding Cylinder containing Free Piston and Liquid.

If a closed vessel, provided with the means of measuring pressure and temperature, is filled with saturated vapor it will be noticed that for any given pressure only one temperature of the vapor can exist. Any change in pressure will cause a corresponding change in temperature. Therefore, only one of those quantities need be known to locate the others. This condition applies only to saturated vapor.

Formation of Vapors. Imagine a free piston, of known weight, in a cylinder, containing a pound of liquid (Fig. 197), the whole apparatus being surrounded by a perfect vacuum. Imagine the temperature of this liquid to be that of melting ice, 32 deg. (This is universally recognized as the datum temperature from which such measurements as heat and entropy are taken). The weight of the piston will impose a certain pressure (p) upon the liquid. If heat is added to the liquid the temperature will have to increase to that corresponding to this pressure (p) before the process of vaporization can begin. A rise in temperature will be the only effect of this heat addition, until this temperature is reached. (Any increase of volume is small enough to be negligible and the pressure (p) will, of course, remain unchanged.)

If more heat is applied at this point vapor will be formed. During this process the temperature will not change; the weight of the piston remaining the same, the pressure will be constant. The volume occupied by the substance will increase and in so doing the piston will be gradually raised.

If a sufficient quantity of heat be added, complete vaporization will result and the cylinder will contain dry saturated vapor, the liquid having disappeared. Beyond this point the temperature will increase, the piston continuing its upward motion. The process has now reached the superheating stage and can be continued indefinitely. At first, as the vapor leaves the condition of saturation, its characteristics will continue to show a marked difference from those of gases; as higher temperatures are reached this difference lessens and finally the superheated vapor takes on all the attributes of and becomes a gas. The pressure remains constant during all three processes—the heating of the liquid, the vaporization, and the superheating of the vapor.

Saturated Vapors. The heat necessary to raise the temperature of one pound of liquid from 32 deg. to any higher temperature is known as the heat of the liquid. It can be calculated by the equation

$$q = \int_{32}^{t} c_e dt \tag{44}$$

in which q is the heat of the liquid, and c_e is the specific heat of the liquid.

The entropy of the liquid above that at 32 deg. can be found by integrating

$$\Phi_e = \int_{492}^{T} \frac{c_e dt}{T} \tag{45}$$

in which Φ_e is the entropy of the liquid above that at 32° F. (492 deg. abs.), c_e is the specific heat of the liquid as before, and T is the absolute temperature.

The specific volume of a liquid (cubic feet per pound) is considered to be a constant quantity for all temperatures and pressures and is represented by δ. The density (pounds per cubic foot) is the reciprocal of the specific volume.

Tables giving the properties of saturated vapors for different pressures and temperatures contain those of the above quantities that are not constant.

If a pound of liquid is completely vaporized at constant pressure and temperature, the heat necessarily added is known as the "latent heat of vaporization," and is expressed as L. This was first found by experiment. From such experiments empirical formulas have been derived, by means of which the values in the tables have been calculated.

The increase in entropy during vaporization, known as the "entropy of vaporization," is found by dividing the heat of vaporization by the absolute temperature. Its expression in symbols is Φ_s or L/T.

The sum of the heat of the liquid q and the heat of vaporization L, is known as the total heat of dry saturated vapor and is represented by H.

$$H = q + L \tag{46}$$

Similarly the total entropy is

$$\Phi = \Phi_e + \frac{L}{T} \tag{47}$$

Wet Saturated Vapor. If sufficient heat is not added to complete the process of vaporization, liquid and vapor are mixed. The part of such a mixture existing as vapor is known as the "quality" and is designated by the symbol x. The part remaining as liquid is the "wetness" or moisture. In most types of boilers the quality of the steam produced is from 98.0 to 99.5 per cent and the wetness from 0.5 to 2.0 per cent. The water is then held in suspension in the steam as a sort of fog. It does not affect the temperature and can be carried an indefinite distance by the steam.

The properties affected by this partial vaporization are the heat L, the entropy L/T, and the specific volume. The last can be expressed as follows:

$$\text{Sp. vol.} = x\,v + (1-x)\,\delta \qquad (48)$$

$$= x\,(v-\delta) + \delta \qquad (49)$$

in which v is the specific volume of dry saturated steam, xv the volume of the steam present, and $(1-x)\,\delta$ that of the wetness. δ is small (0.02 cu.ft.)

Superheated Vapors. The properties of superheated vapors are calculated principally from laws similar to those applying to gases; thus the addition of heat during the process is $c_p(t_{sup.}-t_{sat.})$. The increase in entropy is $c_p \cdot \log_e (T_{sup.}/T_{sat.})$, when c_p for both expressions is a mean specific heat for the given range of temperature. The specific volume is calculated by using the characteristic gas equation worked into an empirical form as the result of experiments. Tables for superheated vapors usually give the total heat H, the specific volume, the entropy Φ measured from that of water at 32 deg., and include these quantities for the liquid stage and for the saturated vapor stage.

The foregoing discussion of the properties of vapors, although intended primarily for use with steam, is equally applicable to other vapors; for example, ammonia as a refrigerative fluid.

Properties of Steam. Steam is usually generated in a boiler in which the vapor is removed as fast as it is formed, thus keeping the pressure constant. Water is pumped into the boiler and must have its temperature raised to that corresponding to the boiler pressure before vaporization can begin. If the temperature of the water is 32 deg. when it enters the boiler, the heat of the liquid will be added to each pound previous to vaporization. If, as is usual, the water is at some higher temperature when it enters the boiler, then the heat added to each pound previous to vaporization will be the heat of the liquid at the temperature of the boiler steam minus the heat of the liquid at the entering temperature.

If more heat is added to this water, steam is formed. This process may be complete, producing dry-saturated steam, or partial when the steam is wet-saturated. The quantity of heat added is the heat of vaporization (L), or (xL) respectively.

The process of superheating due to the continued addition of heat at constant pressure may take place in a coil of pipe placed in the path of hot gases inside the boiler setting, called an attached superheater; or in a coil placed over a separate furnace, known as a separately-fired superheater. With either type the heat per pound above the point of dry saturation is the mean specific heat for the temperature range multiplied by this increase in temperature. The method of determining the increase in entropy during superheating and the specific volume of superheated steam is described elsewhere.

Sources of Data. Most of the properties of saturated and superheated steam have been derived from experimental investigations extending over a long period of time. The scientists of later years have produced more accurate results than did the earlier workers. No attempt will be made here to give in detail the work of these experimenters, since it is taken up in the standard works on thermodynamics.

When authors of steam tables have used different equations as a basis of their computations, the results will vary somewhat. In recent tables, however, these differences are negligible for ordinary engineering work.

The following problems will serve to illustrate the use of Tables 62 and 63, which are extracted from "Properties of Steam and Ammonia," by *Prof. G. A. Goodenough.*

Example 1. How many heat units will be taken up by the water in a boiler per hour if 10,000 lb. are fed per hour at a temperature of 153 deg., the boiler pressure being 150 lb. absolute, (a) if the steam is dry-saturated; (b) if 2 per cent priming is present; (c) if by the use of an attached superheater the steam is superheated 70 deg.?

A part of the 2000 H. P. installation of Heine Boilers in the Hecker-Jones-Jewell Milling Co., New York City.

(a) Looking in the tables under 153 deg. we find the heat of the liquid, $q = 120.9$ B.t.u. This heat is already in the water when it enters the boiler. If the steam leaving the boiler is dry-saturated the heat $H = q + L$ will be present. This we find (opposite 150 lb. in column 7) is 1194.7 B.t.u.

The heat taken up by the water in the boiler will be the difference between that in the steam when it leaves and the water when it enters. This will be q [150-lb.] + L [150-lb.] — q [153 deg.], or H [150-lb.] — q [153 deg.] per pound; substituting and multiplying by the weight we have 10,000 (1194.7 — 120.9) = 10,738,000 B.t.u. per hour.

(b) If the wetness is 2 per cent then $x = 0.98$ and the expression will be: q [150-lb.] + 0.98 L [150-lb.] — q [153 deg.] = B.t.u. per pound. Then 10,000 (329.8 + 0.98 × 864.9 — 120.9) = 10,565,000 B.t.u. per hour, when 329.8 and 864.9 are the values of q and L for 150-lb. pressure.

(c) If the steam is superheated 70 deg. its temperature will be the temperature of saturated steam at 150 lb. pressure plus 70 deg. Opposite 150 lb. the temperature is 358.5 deg., therefore the temperature of the superheated steam will be 358.5 + 70 = 428.5 deg.

The heat content of this superheated steam is found in Table 63 under 150 pounds and opposite the 428.5 temperature. Interpolation between 420 and 432 deg. will be necessary.

$H = 1235$ B.t.u.

The heat taken up by the water will now be,

H [150-lb.] — q [153 deg.] per pound, or 10,000 (1235.0 — 120.9) = 11,141,000 B.t.u. per hour.

Example 2. Find the number of cubic feet of steam that will leave the boiler per hour under the three conditions given in Example 1.

(a) If the steam is dry-saturated the volume of a pound can be found opposite 150 pounds in Table 62, Column 4, giving $v = 3.02$ cu. ft. Total volume = 10,000 x 3.02 = 30,200 cu. ft. per hour.

(b) With 2 per cent wetness the volume of one pound will be found by the formula $x\ (v - 0.02) + 0.02 = 0.98\ (3.02 - 0.02) + 0.02 = 2.96$ cu. ft.

Total volume = 10,000 × 2.96 = 29,600 cu. ft. per hour.

(c) If the steam is superheated 70 deg. the temperature will be 428.5 deg. as determined in Example 1.

Using Table 63 (under 150 lb. and opposite $t = 428.5$ deg.) the specific volume is 3.36 cu. ft.

Total volume = 10,000 × 3.36 = 33,600 cu. ft. per hour.

Example 3. Steam under a pressure of 175 lb. absolute and a temperature of 440 deg. expands adiabatically until it is dry-saturated. (a) What will the pressure then be? (b) If the expansion is continued until the pressure is 50 lb. absolute what will be the final quality?

(a) During an adiabatic expansion the entropy remains constant. The entropy of one pound of the steam for the first condition is given in Table 63 (under 175 pounds pressure; opposite 440 deg.) as $\Phi = 1.6045$. This must equal the total entropy of dry-saturated steam at some lower pressure. In Table 62 the last column is examined until the same figure 1.6045 is found. Opposite this in column 2 the pressure is given as 100 lb. absolute.

(b) When the expansion is carried to 50 lb. abs., the final quality (x) can be found by equating the total entropy of this wet saturated steam to that of the steam in the initial superheated condition. Then

$$\Phi_e \text{ [50-lbs.]} + x\frac{L}{T} \text{ [50-lb.]} = 1.6045$$

In Table 62 opposite 50 lb. pressure, columns 8 and 9 respectively, we have

$$\Phi_e = 0.4108, \quad \frac{L}{T} = 1.2501 \qquad 0.4108 + 1.2501x = 1.6045$$

$$x = 0.955$$

When extreme accuracy is not necessary, graphical charts can be used in place of the tables. The use of two of these charts, Figs. 198 and 199, is explained below.

Temperature-Entropy Diagrams

THE diagram, Fig. 198, is given by *Prof. C. H. Peabody* to solve problems in saturated and superheated steam. The abscissas are units of entropy and the ordinates are degrees Fahrenheit. At the left is a scale of pressures by aid of which the nearest degree can be chosen for use in the saturated region; in the superheated region constant pressure lines are drawn and are numbered near the saturated line, as 100-lb. (pounds).

The saturation line (which separates the saturated and superheated regions) gives the entropy of dry-saturated steam, $\Phi_e + L/T$. The dotted lines give the quality x; the values are numbered at the bottom. In the superheated region the dotted lines give the superheat or excess temperature over that of saturated steam at the same pressure.

The heat contents $q + xL$ are given by full lines lettered "B.t.u." which slope toward the right downward.

The specific volumes are given by full lines lettered "Cu. Ft.," which have a moderate inclination from the horizontal. In the superheated region the lines can be distinguished by sighting along them. The use of the diagram given in Fig. 198 is illustrated by the following examples:

Example 1. Given the absolute pressure 160 lb. and the wetness 2 per cent ($x = 0.98$): Find the entropy, heat content and specific volume.

The nearest temperature is 362 deg., and this line intersects the quality line $x = 0.98$ at entropy $\Phi = 1.54$. The B.t.u. line intersecting this point is 1175 B.t.u. $= q + xL$ and the specific volume line for 2.7 cu. ft. also crosses this point. These figures are of course obtained by interpolation.

Example 2. Given the absolute pressure 160 lb. and 100 deg. superheat: Find the entropy, heat content and specific volume.

The pressure curve 160 lb. in the superheat region cuts the 100 deg. superheat line at entropy 1.63. The intersection of the heat and volume lines give $H = 1250$ and specific volume $= 3.3$ cu. ft.

(Adiabatic changes during which the entropy is constant are represented by vertical lines, while isothermal or constant temperature changes are horizontal lines.)

Example 3. Steam at 120 lb. absolute pressure and 100 deg. superheat expands adiabatically to a temperature of 142 deg. Find the final quality and the final specific volume.

The 120-lb. line crosses the 100-deg. superheat line at entropy 1.65. This property is constant during the change, therefore following down the vertical entropy line 1.65 until the horizontal temperature line 142 deg. is reached, we read the quality as 0.86 and the specific volume as 100 cu. ft.

Mollier Diagram for Steam

THE Mollier diagram for steam, as found in Goodenough's tables, is shown in Fig. 199. In this diagram lines parallel to the coordinate axes give values of heat content and entropy, as read on the scales along the margin. Constant pressure curves slope downward and to the left. In the region of superheat constant temperature lines curve gradually toward the left downward. These are replaced in the saturated region by constant quality lines.

Any point on the diagram represents a definite state of the fluid. If the point lies in the region of superheat the heat content, entropy, pressure and temperature are read directly. In the saturated region the quality is given, but the temperature must be obtained from the pressure.

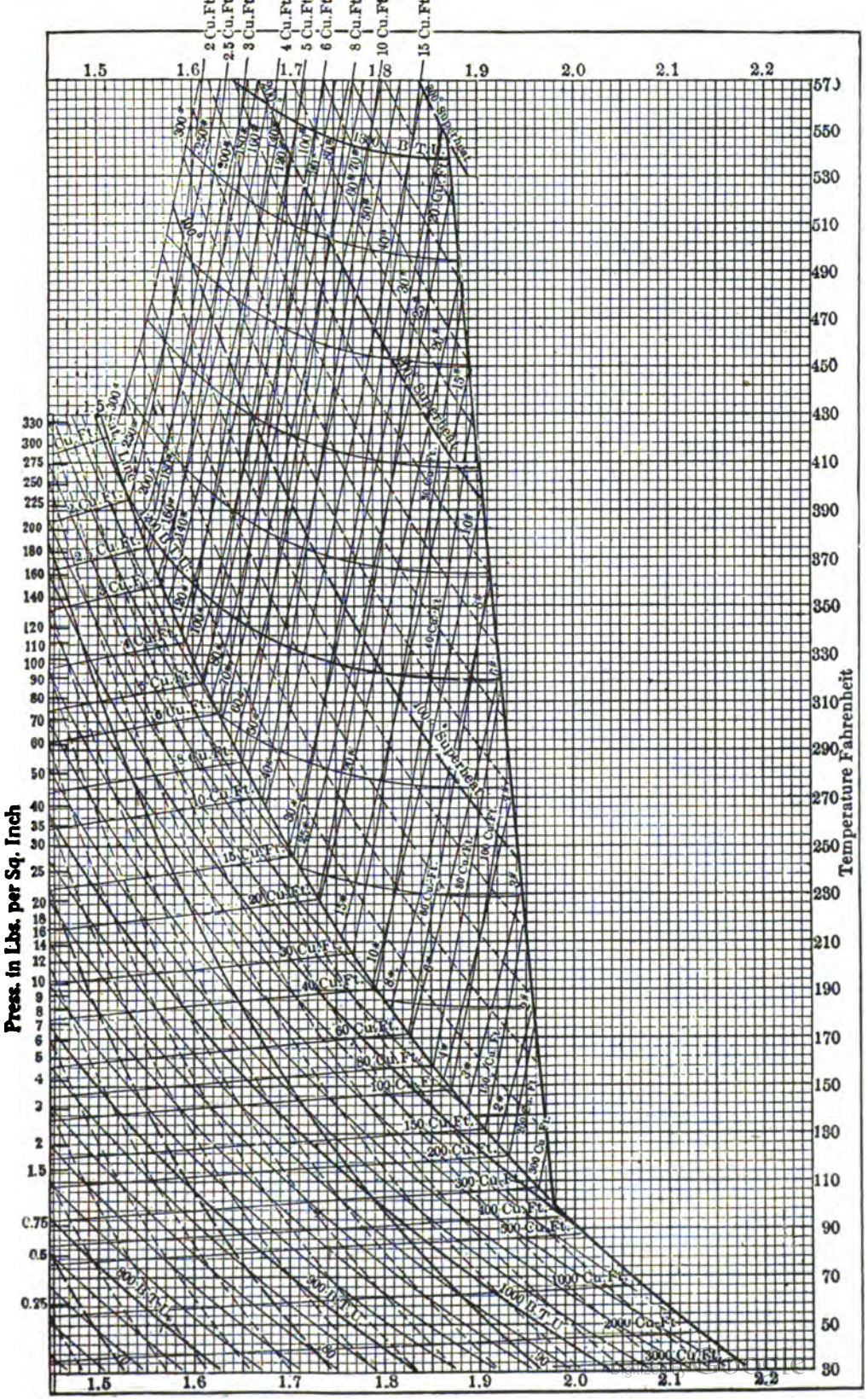

Fig. 198. Peabody's Temperature Entropy Diagram for Steam.

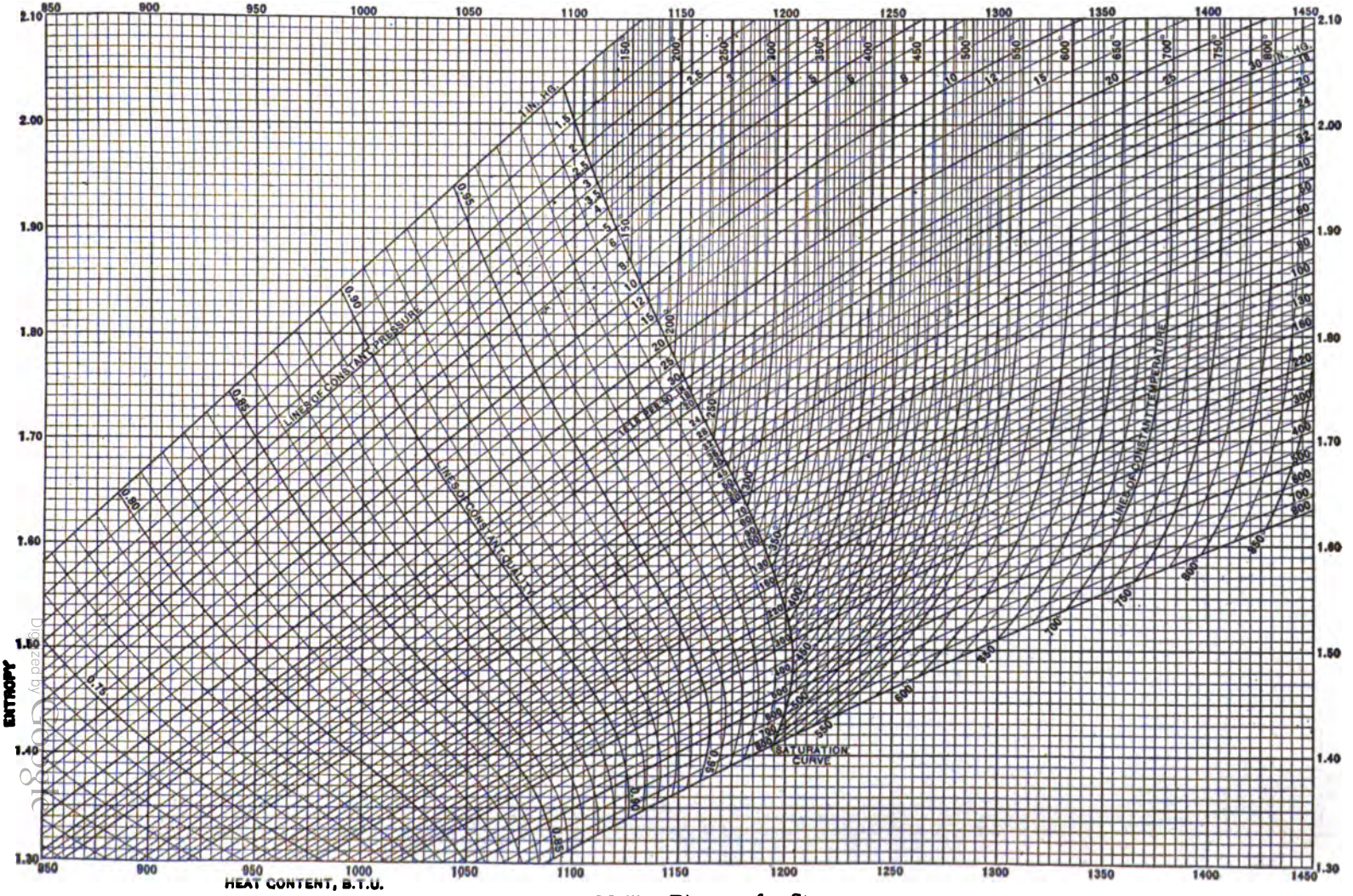

Fig. 199. Mollier Diagram for Steam.

To prevent confusion, the volume curves are not given. This property can, however, be easily obtained. If the point lies in the superheat region, read the pressure and temperature from the diagram and look up the corresponding value of volume in Table 63. If it lies in the saturated region, read the pressure and quality from the diagram, look up the specific volume of dry-saturated steam at the same pressure in Table 62 and multiply this by the quality.

The following illustrations of the use of this diagram are given by Professor Goodenough.

Example 1. Find the properties of steam at a pressure of 120 lb. absolute and a temperature of 412 deg.

From the diagrams the point that represents the state of the steam is found at the intersection of the curves $p = 120$ and $t = 412$. From the scales are read $H = 1231$ B.t.u., $\Phi = 1.637$. From Table 63 the specific volume is found to be 4.16 cu. ft. (These particular values could be found as easily and more accurately from Table 63.)

Example 2. Steam at a pressure of 120 lb. absolute and a temperature of 412 deg. expands adiabatically. At what pressure does it become dry-saturated?

During this change the entropy remains constant; hence the final state is given by the intersection of the line $\Phi = 1.637$ with the saturation curve. The pressure indicated by this point is 68 lb. per sq. in. absolute.

Example 3. Steam in the same initial state as in Examples 1 and 2 expands adiabatically to a pressure of 2 in. of mercury. Find the volume, heat content and quality in the final state.

The entropy in the initial state is 1.637; hence find the intersection of the line $\Phi = 1.637$ with the curve $p = 2$ in. of mercury. This point gives the values $x = 0.815$, $H = 913$ B.t.u. From Table 62, v for 1 lb. absolute (which is practically 2 in. of mercury) is 333.3 cu. ft.; hence the volume of the mixture with a quality $x = 0.815$ is $0.815 \times 333.3 = 271.6$ cu. ft.

Flow of Steam Through Nozzles

The ordinary form of nozzle in which steam expands as it passes to the blades of an impulse turbine is shown in Fig. 200. Suppose steam is flowing through the nozzle, the pressure being

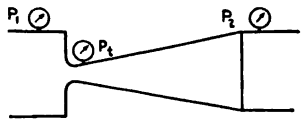

Fig. 200. Expansion Nozzle.

P_1, P_t, P_2, as indicated by the three gages. As long as the absolute pressure at P_2 is less than 0.58 of the absolute pressure at P_1, the absolute pressure at P_t—the smallest section, known as the throat—is exactly $0.58P_1$. When P_2 is less than P_t the weight of the steam flowing through the nozzle will not change. This weight is entirely independent of any pressure beyond the throat as long as it does not exceed the pressure in the throat.

U. S. Realty Building, New York, N. Y., containing 1525 H. P. of Heine Boilers.

The formula for the flow through such a nozzle is as follows:

$$W = \frac{AV_t}{v} \tag{50}$$

W = Steam, pounds per second
A = Area of the throat section, square feet
V_t = Velocity of steam passing the throat section, feet per second
v = Specific volume of steam at the pressure and quality in the throat after adiabatic expansion at constant entropy.

On account of the rapidity with which steam passes through the nozzle, not allowing time for any appreciable transfer of heat through the walls, the process can be considered as adiabatic and the entropy constant.

Applying the laws for the adiabatic flow of steam, the following formula for the velocity of flow through the throat section can be deduced:

$$V_t = 224\sqrt{H_1 - H_t} \tag{51}$$

V_t = Velocity at throat section, feet per second
H_1 = Heat content at the absolute initial pressure and quality of the steam, B.t.u.
H_t = Heat content at the absolute throat pressure and the quality at that pressure resulting from a constant entropy change.

If the part of the nozzle beyond the throat is omitted, leaving it as shown in Fig. 201, the result is a standard convergent nozzle, which can be used in measuring the flow of steam within the limits of ordinary accuracy.

The formulas for the weight and the velocity at the throat of the expansion nozzle can be applied directly to the simple convergent nozzle, considering the dimensions and properties of the throat of the expansion nozzle to be those of the convergent nozzle, the initial pressure for the expansion nozzle being the pressure before the convergent nozzle.

This makes, as will be noticed, a nozzle with a rounded approach, as shown in Fig. 201. Other proportions can be used, but those indicated have given good results in practice.

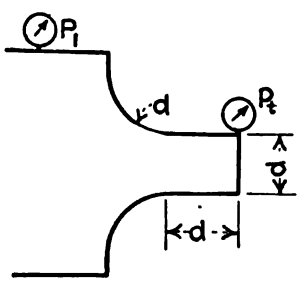

Fig. 201. Simple Convergent Nozzle.

The use of the formulas can be explained by an example.

Steam at a pressure of 140 lb. abs. and a temperature of 400 deg. flows through a standard convergent nozzle, 1-in. diameter, into a pipe line where the pressure is 60 lb. abs. How many pounds will pass through the nozzle per second?

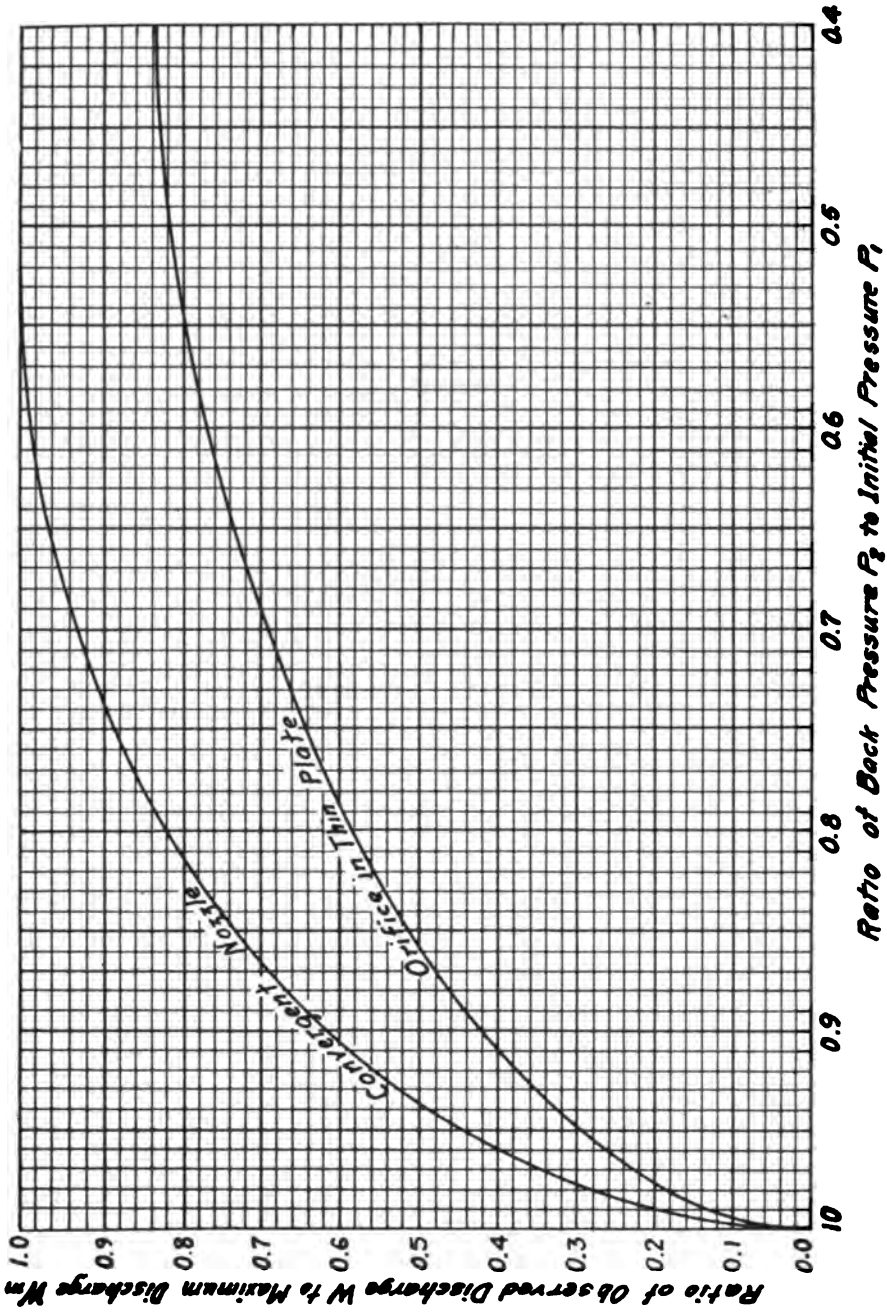

Fig. 202. Flow of Steam through Nozzles and Orifices.

Using the Mollier chart we find that steam P_1 at 140 lb. abs. and 400 deg. has a heat content of 1221 B.t.u., and an entropy of 1.61. The pressure in the throat of the nozzle, P_t will be 0.58 of 140 lb. or 81 lb. abs. As the change between these two pressures is adiabatic we follow the 1.61 entropy line on the chart until it intersects the 81-lb. pressure curve. Here we read the heat content as 1173 and the quality, $x = 0.987$. The specific volume at this pressure and quality is $0.987 \times 5.42 = 5.35$ cu. ft.

The velocity in the throat of the nozzle will be:

$$V_t = 224\sqrt{H_1 - H_t} = 224\sqrt{1221 - 1173} = 1552 \text{ ft. per sec.}$$

The area of a 1-in. orifice = 0.00545 sq. ft., so that the weight per second will be:

$$W = \frac{AV_t}{w} = \frac{0.00545 \times 1552}{5.35} = 1.6 \text{ lb.}$$

In solving this problem the final heat content in the velocity formula is taken at 0.58 of the initial pressure, which is the pressure at the throat of the nozzle, and not the final pressure in the pipe line. These formulas can be applied to either superheated or saturated steam.

As a result of experiments, empirical formulas have been derived for the flow of steam; these are sufficiently accurate for engineering purposes. Two sets are in common use, one by *Napier* and the other by *Grashof*. Napier's experiments were made on dry-saturated steam and his formulas apply only to steam in approximately that condition. He found that:

$$W = \frac{AP_1}{70} \text{ when } P_2 = \text{or} < 0.6P_1 \qquad (52)$$

$$W = 0.0292AP_2\,(P_1 - P_2) \text{ when } P_2 > 0.6P_1 \qquad (53)$$

W = Amount of steam, pounds per second
A = Area of orifice, square inches
P_1 = Absolute pressure before orifice, pounds per square inch
P_2 = Absolute pressure after orifice, pounds per square inch.

The first of these gives results accurate within 2 per cent. The second formula is not to be recommended as accurate within 8 per cent when P_2/P_1 is 0.85 or higher.

Grashof's formula for dry-saturated steam when P_2 = or $< 0.58\ P_1$ is:

$$W = \frac{AP_1^{0.97}}{60} \qquad (54)$$

For a given nozzle, the weight discharged is greater for wet-saturated than for dry steam. The flow then is inversely proportional to the square root of x_1, and Grashof's formula becomes

$$W = \frac{AP_1^{0.97}}{60\sqrt{x_1}} \qquad (55)$$

To find the weight of steam discharged when P_2 is greater than $0.58P_1$, the curves in Fig. 202 are convenient. They are plotted from the results of Rateau's experiments on convergent nozzles and thin plate orifices. The discharge for the nozzle is first found for the condition when P_2 is less than $0.58P_1$. This is done either by formula (52) or by formula (54). Then the ratio $\frac{P_2}{P_1}$ is found, and the lower (abscissa) scale of Fig. 202 entered with this ratio. Proceed vertically to the point of intersection with curve for

Everett Building, New York City, equipped with Heine Boilers.

convergent nozzles, and then horizontally to the left (ordinate) scale and read the coefficient of discharge. Multiply by this coefficient the discharge as just found, and the result is the actual discharge under the conditions given.

To find the weight of steam discharged through an orifice in a thin plate, proceed as above, except that intersection is made with the curve for thin plate orifice.

Example: By the use of a thin diaphragm inserted between the flanges of a joint in the steam pipe supplying an auxiliary engine, it is desired to find the weight of steam consumed by the engine. The pressures observed are 152 and 143 pounds; and the hole in the diaphragm is $^5/_{16}$ inch.

The area of the orifice is 0.0767 sq. in., and the absolute pressure P_1 is 166.7 lb. Then by formula (52)

$$W = \frac{.076 \times 166.7}{70} = 0.18088 \text{ lb. per sec.}$$

per sq. in. discharge when P_2 is less than $0.58P_1$

Now $P_1 = 166.7$ and $P_2 = 157.7$ and $157.7/166.7 = 0.946$. Entering the lower scale of Fig. 202 with 0.946, proceeding vertically to intersection with orifice curve and horizontally to the left-hand scale, read as coefficient 0.31. Multiplying by the coefficient 0.31 the maximum discharge 0.18088 as found above, the discharge through the thin plate is found to be 5.6 pounds per sec.; multiplying by 3,600, the discharge is 202 pounds of steam per hour.

The pipe on the supply side of the diaphragm should be straight for at least 10 times its bore. The diameter of the hole in the diaphragm should not be larger than one quarter of the pipe bore. If necessary, a larger pipe must be put in on the supply side with a straight length of not less than 10 times its bore.

If the diaphragm is thicker than $^1/_{64}$ inch, it should be countersunk at an angle of 45° on the downstream side, so that the parallel part of the hole is not more than $^1/_{64}$ inch long. On the inlet side of the diaphragm, burrs should be removed and great care taken not to round away the entrance corner which must be left sharp.

Owing to the difficulty of removing the burrs while keeping the corner sharp, it is sometimes easier to use a much thicker diaphragm and form a convergent nozzle in it. The thickness of the diaphragm should then be about twice the diameter of the hole. There should be a parallel portion whose length is about half the diameter of the hole, and a curved portion formed to a radius of about 1½ diameters, making a smooth, rounded or bell-mouthed entrance similar to Fig. 201.

While the diaphragm method is a simple one for finding the steam consumption of auxiliaries, and so forth, it is essential that great care be used in getting the exact diameter of the hole and the exact pressures obtaining.

The pressure gages used should be connected within about 12 inches on each side of the diaphragm. To insure accuracy, they should be tested before and after taking the readings, and, as a further check, the readings should be repeated with the positions of the gages reversed.

Experimental data for the flow of superheated steam through nozzles and orifices are lacking. One of the latest formulas, in the form of that of *Grashof*, is worked out from experiments by *Lewicke* and checked from data in possession of the General Electric Company. This formula is as follows:

$$W = \frac{A P_1^{0.97}}{60\,(1 + 0.0065\,D)} \qquad (56)$$

in which D is the superheat in degrees Fahrenheit, and the other symbols are as before.

Table 62. Properties of Saturated Steam.

Pressure		Temp., °F.	Volume, cu. ft. per lb.	Weight, lb. per cu. ft.	Heat content in B.t.u.		Latent Heat of vaporization in B.t.u.	Entropy		
in. of mercury	Lb. per sq. in. (Abs.)				of liquid	of vapor		of liquid	of vaporization	of vapor
	p	t	v	$\frac{1}{v}$	q	H	L	Φ_e	$\frac{L}{T}$	Φ
29.72	0.0982	34.55	2992	0.000334	2.56	1074.2	1071.7	0.0052	2.1687	2.1739
29.62	.1474	44.97	2036	.000491	13.04	1079.2	1066.1	.0262	2.1130	2.1392
29.52	.1965	52.67	1550	.000645	20.75	1082.8	1062.0	.0413	2.0732	2.1146
29.42	.2456	5883	1255	.000797	26.91	1085.7	1058.8	.0533	2.0423	2.0956
29.32	.2947	63.98	1056	.000947	32.06	1088.1	1056.0	.0632	2.0169	2.0801
29.22	0.3438	68.43	913	0.001096	36.50	1090.1	1053.6	0.0717	1.9956	2.0672
29.12	.3929	72.35	805	.001243	40.42	1091.9	1051.5	.0790	1.9768	2.0558
29.02	.4421	75.87	720	.001389	43.93	1093.5	1049.6	.0856	1.9602	2.0458
28.92	.4912	79.06	652	.001534	47.11	1095.0	1047.9	.0915	1.9455	2.0370
28.82	.5403	81.98	596	.001679	50.03	1096.4	1046.4	.0969	1.9320	2.0290
28.72	0.589	84.68	549	0.001823	52.72	1097.6	1044.9	0.1019	1.9198	2.0217
28.62	.639	87.19	508.7	.001966	55.23	1098.8	1043.5	.1065	1.9085	2.0150
28.52	.688	89.54	474.3	.002108	57.57	1099.8	1042.3	.1108	1.8980	2.0087
28.42	.737	91.75	444.5	.002250	59.77	1100.8	1041.1	.1148	1.8882	2.0030
28.32	.786	93.83	418.2	.002391	61.84	1101.8	1040.0	.1185	1.8791	1.9976
28.22	0.835	95.80	395.0	0.002532	63.81	1102.7	1038.9	0.1221	1.8705	1.9926
28.12	.884	97.67	374.3	.002672	65.68	1103.5	1037.9	.1254	1.8624	1.9878
28.02	.933	99.46	355.7	.002811	67.46	1104.3	1036.9	.1286	1.8547	1.9833
27.92	.982	101.17	338.9	.002950	69.16	1105.1	1036.0	1316	1.8474	1.9790
27.884	1	101.76	333.3	0.00300	69.76	1105.4	1035.6	0.1327	1.8448	1.9775
27.82	1.031	102.80	323.7	0.00309	70.79	1105.9	1035.1	0.1345	1.8404	1.9750
27.72	1.081	104.37	309.8	.00323	72.36	1106.6	1034.2	.1373	1.8338	1.9711
27.62	1.130	105.88	297.1	.00337	73.86	1107.2	1033.4	.1400	1.8274	1.9674
27.52	1.179	107.33	285.5	.00350	75.30	1107.9	1032.6	.1425	1.8213	1.9639
27.42	1.228	108.73	274.7	.00364	76.70	1108.5	1031.8	.1450	1.8155	1.9605
27.32	1.277	110.08	264.7	0.00378	78.05	1109.1	1031.1	0.1474	1.8099	1.9573
27.22	1.326	111.39	255.5	.00391	79.36	1109.7	1030.4	.1497	1.8045	1.9541
27.12	1.375	112.66	246.9	.00405	80.62	1110.3	1029.7	.1519	1.7992	1.9511
27.02	1.424.	113.89	238.9	.00419	81.85	1110.8	1029.0	.1540	1.7942	1.9482
26.92	1.474	115.08	231.4	.00432	83.04	1111.4	1028.3	.1561	1.7893	1.9454
26.82	1.523	116.24	224.4	0.00446	84.19	1111.9	1027.7	0.1581	1.7846	1.9427
26.72	1.572	117.37	217.8	.00459	85.32	1112.4	1027.0	.1601	1.7800	1.9401
26.62	1.621	118.47	211.6	.00473	86.41	1112.9	1026.4	.1620	1.7756	1.9376
26.52	1.670	119.54	205.7	.00486	87.48	1113.3	1025.8	.1638	1.7713	1.9351
26.42	1.719	120.58	200.2	.00500	88.52	1113.8	1025.3	.1656	1.7671	1.9327

Table 62. Properties of Saturated Steam—Cont.

Pressure		Temp., °F.	Volume, cu. ft. per lb.	Weight, lb. per cu. ft.	Heat content in B.t.u.		Latent Heat of vaporization in B.t.u.	Entropy		
In. of mercury	Lb. per sq. in. (Abs.)				of liquid	of vapor		of liquid	of vaporization	of vapor
	p	t	v	$\frac{1}{v}$	q	H	L	Φ_e	$\frac{L}{T}$	Φ
26.32	1.768	121.60	195.0	0.00513	89.53	1114.2	1024.7	0.1673	1.7631	1.9304
26.22	1.817	122.59	190.0	.00526	90.52	1114.7	1024.2	.1690	1.7591	1.9281
26.12	1.866	123.57	185.3	.00540	91.49	1115.1	1023.6	.1707	1.7553	1.9260
26.02	1.916	124.52	180.8	.00553	92.44	1115.5	1023.1	.1723	1.7515	1.9238
25.92	1.965	125.44	176.5	.00566	93.37	1115.9	1022.5	.1739	1.7478	1.9217
25.848	2	126.10	173.6	0.00576	94.02	1116.2	1022.2	0.1750	1.7452	1.9203
25.82	2.014	126.35	172.5	0.00580	94.28	1116.3	1022.0	0.1755	1.7442	1.9197
25.72	2.063	127.25	168.7	.00593	95.16	1116.7	1021.5	.1770	1.7407	1.9177
25.62	2.112	128.12	165.0	.00606	96.03	1117.1	1021.1	.1785	1.7373	1.9158
25.52	2.161	128.97	161.5	.00619	96.89	1117.5	1020.6	.1799	1.7340	1.9139
25.42	2.211	129.81	158.1	0.00633	97.73	1117.8	1020.1	0.1813	1.7307	1.9121
25.32	2.260	130.64	154.8	.00646	98.55	1118.2	1019.7	.1827	1.7275	1.9103
25.22	2.309	131.44	151.7	.00659	99.35	1118.6	1019.2	.1841	1.7244	1.9085
25.12	2.358	132.24	148.8	.00672	100.14	1118.9	1018.8	.1854	1.7214	1.9068
25.02	2.407	133.02	145.9	.00685	100.92	1119.2	1018.3	.1867	1.7184	1.9051
24.92	2.456	133.78	143.2	0.00698	110.68	1119.6	1017.9	0.1880	1.7154	1.9034
23.92	2.947	140.80	120.7	.00829	108.69	1122.6	1013.9	.1998	1.6888	1.8886
23.812	3	141.49	118.7	0.00843	109.38	1122.9	1013.5	0.2009	1.6862	1.8871
22.92	3.438	146.88	110.4	0.00958	114.8	1125.2	1010.5	0.2098	1.6661	1.8760
21.92	3.929	152.26	92.1	.01085	120.2	1127.5	1007.4	.2187	1.6464	1.8651
21.776	4	152.99	90.6	0.01104	120.9	1127.9	1007.0	0.2199	1.6438	1.8637
20.92	4.421	157.10	82.5	0.01212	125.0	1129.6	1004.6	0.2265	1.6290	1.8556
19.92	4.912	161.50	74.8	.01338	129.4	1131.4	1002.1	.2336	1.6134	1.8470
19.74	5	162.25	73.5	0.01360	130.1	1131.7	1001.6	0.2348	1.6107	1.8456
18.92	5.403	165.55	68.4	0.01463	133.4	1133.1	999.7	0.2401	1.5992	1.8393
17.92	5.894	169.30	63.0	.01587	137.2	1134.7	997.5	.2461	1.5862	1.8323
17.704	6	170.07	62.0	0.01614	137.9	1135.0	997.1	0.2473	1.5835	1.8308
16.92	6.39	172.79	58.5	0.01710	140.7	1136.1	995.5	0.2516	.15742	1.8258
15.92	6.88	176.06	54.6	.01833	143.9	1137.5	993.6	.2568	1.5630	1.8198
15.67	7	176.85	53.7	0.01864	144.7	1137.8	993.1	0.2581	1.5603	1.8184

Table 62. Properties of Saturated Steam.—Cont.

Pressure		Temp., °F.	Volume, cu. ft. per lb.	Weight, lb. per cu. ft.	Heat content in B.t.u.		Latent heat of vaporization in B.t.u.	Entropy		
In. of mercury	Lb. per sq. in. (Abs.)				of liquid	of vapor		of liquid	of vaporization	of vapor
	p	t	v	$\frac{1}{v}$	q	H	L	Φ_e	$\frac{L}{T}$	Φ
14.92	7.37	179.14	51.14	0.01955	147.0	1138.8	991.7	0.2617	1.5526	1.8143
13.92	7.86	182.06	48.14	.02077	149.9	1140.0	990.0	.2662	1.5429	1.8091
13.63	**8**	182.87	47.35	0.02112	150.8	1140.3	989.5	0.2675	1.5402	1.8077
12.92	8.35	184.83	45.49	0.02198	152.7	1141.1	988.3	0.2705	1.5337	1.8042
11.92	8.84	187.46	43.12	.02319	155.4	1142.1	986.7	.2746	1.5250	1.7996
11.60	**9**	188.28	42.41	0.02358	156.2	1142.5	986.3	0.2759	1.5223	1.7982
10.92	9.33	189.97	40.99	0.02439	157.9	1143.1	985.2	0.2785	1.5168	1.7953
9.92	9.82	192.38	39.08	.02559	160.3	1144.1	983.8	.2822	1.5089	1.7912
9.56	**10**	193.21	38.43	0.02602	161.1	1144.4	983.3	0.2835	1.5062	1.7897
8.92	10.31	194.68	37.34	0.02678	162.6	1145.0	982.4	0.2858	1.5015	1.7873
7.92	10.81	196.89	35.75	.02797	164.8	1145.9	981.1	.2892	1.4944	1.7835
7.52	**11**	197.75	35.16	0.02844	165.7	1146.2	980.5	0.2905	1.4916	1.7821
6.92	11.30	199.03	34.29	0.02916	167.0	1146.7	979.8	0.2924	1.4876	1.7800
5.92	11.79	201.09	32.95	.03035	169.0	1147.5	978.5	.2955	1.4810	1.7766
5.49	**12**	201.96	32.41	0.03086	169.9	1147.9	978.0	0.2969	1.4783	1.7752
4.92	12.28	203.08	31.71	0.03153	170.1	1148.3	977.3	0.2986	1.4747	1.7733
3.92	12.77	205.00	30.57	.03271	173.0	1149.1	976.1	.3015	1.4687	1.7702
3.45	**13**	205.88	30.07	0.03326	173.8	1149.4	975.6	0.3028	1.4659	1.7687
2.92	13.26	206.87	29.51	0.03388	174.8	1149.8	974.9	0.3043	1.4629	1.7671
1.92	13.75	208.67	28.53	.03505	176.6	1150.5	973.8	.3070	1.4572	1.7642
1.42	**14**	209.56	28.06	0.03564	177.5	1150.8	973.3	0.3083	1.4545	1.7628
0.92	14.24	210.43	27.61	0.03622	178.4	1151.2	972.7	0.3096	1.4518	1.7614
0.0	14.697	**212**	26.81	0.03730	180.0	1151.7	971.7	0.3120	1.4469	1.7589
—	14.74	212.13	26.75	0.03739	180.1	1151.8	971.7	0.3122	1.4465	1.7587

Table 62. Properties of Saturated Steam.—Cont.

Pressure Lb. per sq. in.		Temp., °F.	Volume, cu. ft. per lb.	Weight, lb. per cu. ft.	Heat content in B.t.u.		Latent heat of vaporization in B.t.u.	Entropy		
Gage	Absolute				of liquid	of vapor		of liquid	of vaporization	of vapor
	p	t	v	$\frac{1}{v}$	q	H	L	Φ_e	$\frac{L}{T}$	Φ
0.3	15	213.0	26.30	0.03802	181.0	1152.2	971.2	0.3135	1.4438	1.7573
5.3	20	228.0	20.10	0.0498	196.0	1157.7	961.7	0.3356	1.3987	1.7343
10.3	25	240.1	16.32	0.0613	208.2	1162.1	953.8	0.3531	1.3633	1.7164
15.3	30	250.3	13.76	0.0727	218.6	1165.7	947.1	0.3679	1.3340	1.7019
20.3	35	259.3	11.91	0.0840	227.7	1168.7	941.0	0.3805	1.3090	1.6895
25.3	40	267.2	10.51	0.0951	235.8	1171.3	935.5	0.3917	1.2871	1.6788
30.3	45	274.4	9.41	0.1062	243.1	1173.6	930.5	0.4017	1.2677	1.6694
35.3	50	281.0	8.53	0.1173	249.8	1175.6	925.9	0.4108	1.2501	1.6609
40.3	55	287.1	7.80	0.1283	255.9	1177.5	921.5	0.4190	1.2342	1.6532
45.3	60	292.7	7.18	0.1392	261.7	1179.1	917.4	0.4267	1.2195	1.6462
50.3	65	298.0	6.66	0.1501	267.1	1180.6	913.5	0.4338	1.2058	1.6397
55.3	70	302.9	6.22	0.1609	272.2	1182.0	909.8	0.4405	1.1931	1.6336
60.3	75	307.6	5.82	0.1717	277.0	1183.3	906.2	0.4468	1.1812	1.6280
65.3	80	312.0	5.48	0.1824	281.6	1184.4	902.8	0.4527	1.1700	1.6227
70.3	85	316.3	5.18	0.1932	286.0	1185.5	899.6	0.4583	1.1595	1.6178
75.3	90	320.3	4.905	0.2039	290.1	1186.5	896.4	0.4636	1.1495	1.6131
80.3	95	324.1	4.663	0.2145	294.1	1187.5	893.4	0.4687	1.1400	1.6087
85.3	100	327.8	4.442	0.2251	297.9	1188.4	890.5	0.4736	1.1309	1.6045
90.3	105	331.4	4.240	0.2358	301.6	1189.2	887.6	0.4782	1.1222	1.6004
95.3	110	334.8	4.057	0.2465	305.1	1190.0	884.8	0.4827	1.1138	1.5965
100.3	115	338.1	3.889	0.2572	308.6	1190.7	882.1	0.4870	1.1058	1.5928
105.3	120	341.3	3.735	0.2678	311.9	1191.4	879.5	0.4911	1.0982	1.5893
110.3	125	344.4	3.593	0.2783	315.1	1192.0	876.9	0.4950	1.0908	1.5858
115.3	130	347.4	3.461	0.2889	318.2	1192.6	874.4	0.4989	1.0836	1.5825
120.3	135	350.3	3.340	0.2994	321.2	1193.2	872.0	0.5026	1.0767	1.5793
125.3	140	353.1	3.226	0.3100	324.2	1193.7	869.6	0.5062	1.0700	1.5762
130.3	145	355.8	3.120	0.3206	327.0	1194.2	867.2	0.5097	1.0636	1.5733
135.3	150	358.5	3.020	0.3311	329.8	1194.7	864.9	0.5131	1.0573	1.5704
140.3	155	361.1	2.927	0.3417	332.5	1195.2	862.7	0.5164	1.0512	1.5676
145.3	160	363.6	2.839	0.3522	335.2	1195.7	860.5	0.5196	1.0453	1.5649
150.3	165	366.1	2.757	0.3627	337.8	1196.1	858.3	0.5227	1.0395	1.5622
155.3	170	368.5	2.679	0.3733	340.3	1196.5	856.2	0.5258	1.0339	1.5597
160.3	175	370.8	2.605	0.3838	342.8	1196.9	854.1	0.5287	1.0284	1.5572
165.3	180	373.1	2.536	0.3943	345.2	1197.2	852.0	0.5316	1.0231	1.5547
170.3	185	375.4	2.470	0.4048	347.6	1197.6	849.9	0.5344	1.0179	1.5523

Table 62. Properties of Saturated Steam.—Cont.

Pressure Lb. per sq. in.		Temp., °F.	Volume, cu. ft. per lb.	Weight, lb. per cu. ft.	Heat content in B.t.u.		Latent heat of vaporization in B.t.u.	Entropy		
Gage	Absolute				of liquid	of vapor		of liquid	of vaporization	of vapor
	p	t	v	$\frac{1}{v}$	q	H	L	Φ_e	$\frac{L}{T}$	Φ
175.3	190	377.6	2.408	0.4154	350.0	1197.9	847.9	0.5372	1.0128	1.5500
180.3	195	379.7	2.348	0.4259	352.2	1198.2	846.0	0.5399	1.0079	1.5478
185.3	200	381.9	2.292	0.4364	354.5	1198.5	844.0	0.5426	1.0030	1.5456
190.3	205	383.9	2.238	0.4469	356.7	1198.7	842.1	0.5451	0.9983	1.5434
195.3	210	386.0	2.186	0.457	358.8	1199.0	840.2	0.5477	0.9936	1.5413
200.3	215	388.0	2.137	0.468	361.0	1199.2	838.3	0.5502	0.9890	1.5392
205.3	220	390.0	2.090	0.478	363.0	1199.5	836.5	0.5526	0.9846	1.5372
210.3	225	391.9	2.045	0.489	365.1	1199.7	834.6	0.5550	0.9802	1.5352
215.3	230	393.8	2.002	0.499	367.1	1199.9	832.8	0.5573	0.9760	1.5333
220.3	235	395.6	1.961	0.510	369.1	1200.1	831.0	0.5597	0.9717	1.5314
225.3	240	397.5	1.921	0.521	371.0	1200.3	829.3	0.5619	0.9676	1.5295
230.3	245	399.3	1.883	0.531	373.0	1200.5	827.5	0.5641	0.9635	1.5276
235.3	250	401.1	1.846	0.542	374.9	1200.6	825.8	0.5663	0.9595	1.5258
240.3	255	402.9	1.811	0.552	376.7	1200.8	824.1	0.5685	0.9556	1.5241
245.3	260	404.5	1.777	0.563	378.6	1201.0	822.4	0.5706	0.9517	1.5223
250.3	265	406.2	1.745	0.573	380.4	1201.1	820.7	0.5727	0.9479	1.5206
255.3	270	407.9	1.713	0.584	382.2	1201.2	819.1	0.5747	0.9442	1.5189
260.3	275	409.6	1.683	0.594	383.9	1201.4	817.4	0.5767	0.9405	1.5172
265.3	280	411.2	1.654	0.605	385.7	1201.5	815.8	0.5787	0.9369	1.5156
270.3	285	412.8	1.625	0.615	387.4	1201.6	814.2	0.5806	0.9333	1.5139
275.3	290	414.4	1.598	0.626	389.1	1201.7	812.6	0.5826	0.9298	1.5123
280.3	295	415.9	1.571	0.636	390.8	1201.8	811.0	0.5845	0.9263	1.5108
285.3	300	417.5	1.545	0.647	392.4	1201.9	809.4	0.5863	0.9229	1.5092
290.3	305	419.0	1.520	0.658	394.1	1202.0	807.9	0.5882	0.9195	1.5077
295.3	310	420.5	1.496	0.668	395.7	1202.0	806.4	0.5900	0.9162	1.5062
300.3	315	421.0	1.473	0.679	397.3	1202.1	804.8	0.5918	0.9129	1.5047
305.3	320	423.4	1.450	0.690	398.9	1202.2	803.3	0.5935	0.9097	1.5032
310.3	325	424.9	1.428	0.700	400.4	1202.2	801.8	0.5953	0.9065	1.5018
315.3	330	426.3	1.407	0.711	402.0	1202.3	800.3	0.5970	0.9034	1.5004
320.3	335	427.7	1.386	0.721	403.5	1202.3	798.9	0.5987	0.9003	1.4990
325.3	340	429.1	1.366	0.732	405.0	1202.4	797.4	0.6004	0.8972	1.4976
330.3	345	430.5	1.346	0.743	406.5	1202.4	795.9	0.6020	0.8942	1.4962
335.3	350	431.9	1.327	0.753	408.0	1202.5	794.5	0.6036	0.8912	1.4949
360.3	375	438.5	1.239	0.807	415.1	1202.6	787.5	0.6115	0.8768	1.4884
385.3	400	444.8	1.162	0.860	422.0	1202.5	780.6	0.6190	0.8631	1.4821

P*	100 [327.8]			105 [331.4]			110 [334.8]			115 [338.1]		
°F.	v	Φ	H	v	Φ	H	v	Φ	H	v	Φ	H
Sat.	4.44	1.6045	1188.4	4.24	1.6004	1189.2	4.06	1.5965	1190.0	3.89	1.5928	1190.7
340	4.53	1.6130	1195.2	4.30	1.6065	1194.1	4.09	1.6002	1192.9	3.90	1.5941	1191.8
350	4.60	1.6199	1200.8	4.37	1.6135	1199.7	4.16	1.6073	1198.6	3.97	1.6012	1197.5
360	4.67	1.6267	1206.3	4.44	1.6203	1205.3	4.22	1.6142	1204.2	4.03	1.6082	1203.2
370	4.74	1.6333	1211.7	4.50	1.6270	1210.8	4.29	1.6209	1209.8	4.09	1.6150	1208.8
380	4.81	1.6398	1217.1	4.57	1.6335	1216.2	4.35	1.6275	1215.3	4.15	1.6217	1214.3
390	4.88	1.6461	1222.5	4.64	1.6399	1221.6	4.42	1.6339	1220.7	4.21	1.6282	1219.8
400	4.95	1.6523	1227.8	4.70	1.6462	1227.0	4.48	1.6403	1226.1	4.27	1.6346	1225.3
410	5.02	1.6585	1233.1	4.77	1.6523	1232.3	4.54	1.6465	1231.5	4.34	1.6408	1230.7
420	5.08	1.6645	1238.4	4.83	1.6584	1237.6	4.60	1.6526	1236.9	4.40	1.6470	1236.1
430	5.15	1.6704	1243.6	4.90	1.6644	1242.9	4.67	1.6586	1242.2	4.46	1.6530	1241.4
440	5.22	1.6762	1248.8	4.96	1.6702	1248.1	4.73	1.6645	1247.4	4.52	1.6589	1246.7
450	5.28	1.6820	1254.0	5.02	1.6760	1253.3	4.79	1.6703	1252.7	4.57	1.6647	1252.0
460	5.35	1.6876	1259.2	5.09	1.6817	1258.5	4.85	1.6760	1257.9	4.63	1.6704	1257.2
470	5.41	1.6932	1264.3	5.15	1.6872	1263.7	4.91	1.6816	1263.1	4.69	1.6761	1262.4
480	5.48	1.6986	1269.4	5.21	1.6927	1268.8	4.97	1.6871	1268.2	4.75	1.6817	1267.6
490	5.54	1.7040	1274.5	5.27	1.6981	1273.9	5.03	1.6925	1273.4	4.80	1.6871	1272.8
500	5.61	1.7093	1279.6	5.33	1.7035	1279.0	5.09	1.6979	1278.5	4.86	1.6925	1278.0
550	5.93	1.7349	1304.8	5.64	1.7292	1304.4	5.38	1.7237	1303.9	5.14	1.7184	1303.5
600	6.24	1.7592	1329.8	5.94	1.7535	1329.5	5.67	1.7481	1329.1	5.42	1.7429	1328.8
650	6.55	1.7822	1354.8	6.24	1.7766	1354.5	5.95	1.7712	1354.2	5.69	1.7661	1353.9
700	6.86	1.8042	1379.7	6.53	1.7986	1379.5	6.23	1.7933	1379.2	5.96	1.7882	1379.0
750	7.17	1.8253	1404.7	6.82	1.8197	1404.5	6.51	1.8145	1404.3	6.23	1.8094	1404.1

P*	120 [341.3]			125 [344.4]			130 [347.4]			135 [350.3]		
°F.	v	Φ	H	v	Φ	H	v	Φ	H	v	Φ	H
Sat.	3.74	1.5893	1191.4	3.59	1.5858	1192.0	3.46	1.5825	1192.6	3.34	1.5793	1193.2
350	3.79	1.5955	1196.4	3.63	1.5899	1195.3	3.48	1.5844	1194.2	3.39	1.5863	1198.9
360	3.85	1.6025	1202.1	3.69	1.5970	1201.1	3.54	1.5916	1200.0	3.45	1.5934	1204.8
370	3.91	1.6094	1207.8	3.75	1.6039	1206.8	3.59	1.5986	1205.8	3.50	1.6003	1210.5
380	3.97	1.6161	1213.4	3.80	1.6106	1212.4	3.65	1.6054	1211.5	3.56	1.6070	1216.2
390	4.03	1.6226	1218.9	3.86	1.6172	1218.0	3.70	1.6121	1217.1	3.61	1.6136	1221.8
400	4.09	1.6291	1224.4	3.92	1.6237	1223.6	3.76	1.6186	1222.7	3.66	1.6200	1227.4
410	4.15	1.6354	1229.9	3.97	1.6301	1229.1	3.81	1.6250	1228.2	3.72	1.6263	1232.9
420	4.21	1.6415	1235.3	4.03	1.6363	1234.5	3.87	1.6313	1233.7	3.77	1.6325	1238.4
430	4.26	1.6476	1240.7	4.08	1.6424	1239.9	3.92	1.6374	1239.1	3.82	1.6386	1243.8
440	4.32	1.6536	1246.0	4.14	1.6484	1245.3	3.97	1.6434	1244.5	3.87	1.6446	1249.2
450	4.38	1.6594	1251.3	4.19	1.6543	1250.6	4.03	1.6494	1249.9	3.92	1.6505	1254.6
460	4.43	1.6652	1256.6	4.25	1.6601	1255.9	4.08	1.6552	1255.2	3.97	1.6562	1259.9
470	4.49	1.6709	1261.8	4.30	1.6658	1261.2	4.13	1.6610	1260.5	4.02	1.6619	1265.2
480	4.54	1.6765	1267.0	4.35	1.6714	1266.4	4.18	1.6666	1265.8	4.07	1.6675	1270.5
490	4.60	1.6820	1272.2	4.41	1.6770	1271.7	4.23	1.6721	1271.1	4.12	1.6730	1275.7
500	4.65	1.6874	1277.4	4.46	1.6824	1276.9	4.28	1.6776	1276.3	4.17	1.6784	1280.9
510	4.71	1.6927	1282.6	4.51	1.6878	1282.0	4.34	1.6830	1281.5	4.22	1.6837	1286.2
520	4.76	1.6980	1287.7	4.56	1.6931	1287.2	4.39	1.6883	1286.7	4.27	1.6890	1291.4
530	4.82	1.7032	1292.8	4.62	1.6983	1292.4	4.44	1.6936	1291.9	4.32	1.6942	1296.5
540	4.87	1.7083	1297.9	4.67	1.7034	1297.5	4.49	1.6987	1297.0	4.37	1.6993	1301.7
550	4.92	1.7134	1303.0	4.72	1.7085	1302.6	4.54	1.7039	1302.1	4.60	1.7241	1327.3
600	5.19	1.7379	1328.4	4.98	1.7332	1328.0	4.78	1.7285	1327.7	4.84	1.7475	1352.7
650	5.45	1.7612	1353.6	5.23	1.7565	1353.3	5.03	1.7519	1353.0	5.07	1.7698	1378.0
700	5.71	1.7833	1378.7	5.48	1.7787	1378.5	5.27	1.7742	1378.2	5.30	1.7912	1403.3
750	5.97	1.8046	1403.9	5.73	1.8000	1403.7	5.51	1.7955	1403.5	5.53	1.8117	1428.7

* To the right of (P) appear steam pressures and corresponding saturated steam temperatures; the latter are in brackets.

P and v are respectively the absolute pressure and the volume in cb. ft. per lb.; and Φ and H are the entropy and total heat of superheated steam measured from 32 deg.

P*	140 [353.1]			145 [355.8]			150 [358.5]			155 [361.1]		
°F.	v	Φ	H	v	Φ	H	v	Φ	H	v	Φ	H
Sat.	3.23	1.5762	1193.7	3.12	1.5733	1194.2	3.02	1.5704	1194.7	2.93	1.5676	1195.2
360	3.26	1.5813	1197.9	3.14	1.5763	1196.8	3.03	1.5715	1195.7	.....	.....	.....
370	3.32	1.5884	1203.7	3.19	1.5835	1202.7	3.08	1.5787	1201.6	2.97	1.5741	1200.6
380	3.37	1.5953	1209.5	3.25	1.5905	1208.5	3.13	1.5858	1207.5	3.02	1.5812	1206.5
390	3.42	1.6021	1215.2	3.30	1.5973	1214.3	3.18	1.5927	1213.3	3.07	1.5881	1212.4
400	3.48	1.6087	1220.9	3.35	1.6040	1220.0	3.23	1.5994	1219.1	3.12	1.5949	1218.2
410	3.53	1.6152	1226.5	3.40	1.6106	1225.7	3.28	1.6060	1224.8	3.16	1.6016	1223.9
420	3.58	1.6216	1232.1	3.45	1.6170	1231.3	3.33	1.6124	1230.4	3.21	1.6081	1229.6
430	3.63	1.6278	1237.6	3.50	1.6232	1236.8	3.37	1.6188	1236.0	3.26	1.6144	1235.3
440	3.68	1.6339	1243.1	3.54	1.6294	1242.3	3.42	1.6250	1241.6	3.30	1.6207	1240.8
450	3.73	1.6400	1248.5	3.59	1.6354	1247.8	3.47	1.6310	1247.1	3.35	1.6268	1246.3
460	3.78	1.6458	1253.9	3.64	1.6414	1253.2	3.51	1.6370	1252.5	3.40	1.6328	1251.8
470	3.83	1.6517	1259.3	3.69	1.6472	1258.6	3.56	1.6429	1257.9	3.44	1.6387	1257.3
480	3.87	1.6573	1264.6	3.73	1.6529	1264.0	3.61	1.6486	1263.3	3.48	1.6445	1262.7
490	3.92	1.6629	1269.9	3.78	1.6586	1269.3	3.65	1.6543	1268.7	3.53	1.6502	1268.1
500	3.97	1.6685	1275.2	3.83	1.6641	1274.6	3.69	1.6599	1274.0	3.57	1.6558	1273.4
510	4.02	1.6739	1280.4	3.87	1.6696	1279.9	3.74	1.6654	1279.3	3.62	1.6613	1278.8
520	4.06	1.6793	1285.6	3.92	1.6750	1285.1	3.78	1.6708	1284.6	3.66	1.6667	1284.1
530	4.11	1.6846	1290.9	3.97	1.6803	1290.4	3.83	1.6761	1289.9	3.70	1.6721	1289.3
540	4.16	1.6898	1296.0	4.01	1.6855	1295.6	3.87	1.6814	1295.1	3.75	1.6774	1294.6
550	4.21	1.6949	1301.2	4.06	1.6907	1300.8	3.92	1.6866	1300.3	3.79	1.6826	1299.8
600	4.44	1.7198	1326.9	4.28	1.7156	1326.5	4.13	1 7116	1326.1	4.00	1.7077	1325.8
650	4.66	1.7433	1352.4	4.50	1.7392	1352.1	4.35	1.7352	1351.7	4.20	1.7313	1351.4
700	4.89	1.7656	1377.7	4.72	1.7616	1377.5	4.56	1.7576	1377.2	4.41	1.7538	1377.0
750	5.11	1.7870	1403.1	4.93	1.7830	1402.9	4.77	1.7791	1402.6	4.61	1.7753	1402.4

P*	160 [363.6]			165 [366.1]			170 [368.5]			175 [370.8]		
°F.	v	Φ	H	v	Φ	H	v	Φ	H	v	Φ	H
Sat.	2.84	1.5649	1195.7	2.76	1.5622	1196.1	2.68	1.5597	1196.5	2.61	1.5572	1196.9
370	2.87	1.5696	1199.5	2.78	1.5651	1198.5	2.69	1.5608	1197.4	.....	.....	.....
380	2.92	1.5767	1205.5	2.82	1.5723	1204.5	2.73	1.5681	1203.5	2.65	1.5639	1202.5
390	2.97	1.5838	1211.4	2.87	1.5794	1210.5	2.78	1.5752	1209.5	2.69	1.5711	1208.5
400	3.01	1.5906	1217.3	2.92	1.5863	1216.4	2.82	1.5821	1215.4	2.74	1.5781	1214.5
410	3.06	1.5973	1223.1	2.96	1.5931	1222.2	2.87	1.5889	1221.3	2.78	1.5849	1220.4
420	3.11	1.6038	1228.8	3.00	1.5997	1228.0	2.91	1.5956	1227.1	2.82	1.5916	1226.3
430	3.15	1.6102	1234.5	3.05	1.6061	1233.7	2.95	1.6021	1232.8	2.86	1.5981	1232.0
440	3.20	1.6165	1240.1	3.09	1.6124	1239.3	3.00	1.6084	1238.5	2.91	1.6045	1237.7
450	3.24	1.6226	1245.6	3.14	1.6186	1244.9	3.04	1.6146	1244.2	2.95	1.6108	1243.4
460	3.28	1.6287	1251.1	3.18	1.6247	1250.5	3.08	1.6207	1249.8	2.99	1.6169	1249.0
470	3.33	1.6346	1256.6	3.22	1.6306	1256.0	3.12	1.6267	1255.3	3.03	1.6230	1254.6
480	3.37	1.6404	1262.1	3.26	1.6365	1261.4	3.16	1.6326	1260.8	3.07	1.6289	1260.1
490	3.41	1.6461	1267.5	3.31	1.6422	1266.9	3.20	1.6384	1266.3	3.11	1.6347	1265.6
500	3.46	1.6518	1272.9	3.35	1.6479	1272.3	3.24	1.6441	1271.7	3.15	1.6404	1271.1
510	3.50	1.6573	1278.2	3.39	1.6535	1277.6	3.29	1.6497	1277.1	3.19	1.6460	1276.5
520	3.54	1.6628	1283.5	3.43	1.6589	1283.0	3.33	1.6552	1282.5	3.23	1.6515	1281.9
530	3.58	1.6682	1288.8	3.47	1.6643	1288.3	3.37	1.6606	1287.8	3.27	1.6570	1287.3
540	3.62	1.6735	1294.1	3.51	1.6697	1293.6	3.41	1.6660	1293.1	3.30	1.6624	1292.6
550	3.67	1.6787	1299.3	3.55	1.6749	1298.9	3.45	1.6712	1298.4	3.34	1.6676	1297.9
600	3.87	1.7039	1325.4	3.75	1.7002	1325.0	3.64	1.6966	1324.6	3.53	1.6931	1324.2
650	4.07	1.7276	1351.1	3.95	1.7240	1350.8	3.83	1.7204	1350.5	3.72	1.7170	1350.1
700	4.27	1.7501	1376.7	4.14	1.7466	1376.4	4.02	1.7431	1376.2	3.90	1.7397	1375.9
750	4.47	1.7717	1402.2	4.33	1.7682	1402.0	4.20	1.7647	1401.8	4.08	1.7613	1401.5
800	4.66	1.7924	1427.7	4.52	1.7889	1427.6	4.38	1.7854	1427.4	4.26	1.7821	1427.2
850	4.85	1.8123	1453.4	4.70	1.8088	1453.2	4.56	1.8054	1453.1	4.43	1.8021	1452.9

* To the right of (P) appear steam pressures and corresponding saturated steam temperatures; the latter are in brackets.

P and v are respectively the absolute pressure and the volume in cb. ft. per lb.; and Φ and H are the entropy and total heat of superheated steam measured from 32 deg.

P*	180 [373.1]			185 [375.4]			190 [377.6]			195 [379.7]		
°F.	v	Φ	H	v	Φ	H	v	Φ	H	v	Φ	H
Sat.	2.54	1.5547	1197.2	2.47	1.5523	1197.6	2.41	1.5500	1197.9	2.35	1.5478	1198.2
380	2.57	1.5598	1201.4	2.49	1.5558	1200.4	2.42	1.5518	1199.4	.....	.....	.....
390	2.61	1.5670	1207.6	2.53	1.5631	1206.6	2.46	1.5592	1205.6	2.39	1.5554	1204.6
400	2.65	1.5741	1213.6	2.57	1.5702	1212.6	2.50	1.5663	1211.7	2.43	1.5626	1210.7
410	2.70	1.5810	1219.5	2.62	1.5771	1218.6	2.54	1.5733	1217.7	2.47	1.5696	1216.8
420	2.74	1.5877	1225.4	2.66	1.5839	1224.5	2.58	1.5801	1223.7	2.51	1.5765	1222.8
430	2.78	1.5943	1231.2	2.70	1.5905	1230.4	2.62	1.5868	1229.6	2.55	1.5832	1228.7
440	2.82	1.6007	1237.0	2.74	1.5970	1236.2	2.66	1.5933	1235.4	2.59	1.5897	1234.6
450	2.86	1.6070	1242.7	2.78	1.6033	1241.9	2.70	1.5997	1241.2	2.63	1.5961	1240.4
460	2.90	1.6132	1248.3	2.82	1.6095	1247.6	2.74	1.6059	1246.9	2.66	1.6024	1246.2
470	2.94	1.6192	1253.9	2.86	1.6156	1253.3	2.78	1.6121	1252.6	2.70	1.6086	1251.9
480	2.98	1.6252	1259.5	2.90	1.6216	1258.9	2.81	1.6181	1258.2	2.74	1.6146	1257.5
490	3.02	1.6310	1265.0	2.93	1.6275	1264.4	2.85	1.6240	1263.8	2.77	1.6206	1263.1
500	3.06	1.6368	1270.5	2.97	1.6332	1269.9	2.89	1.6298	1269.3	2.81	1.6264	1268.7
510	3.10	1.6424	1275.9	3.01	1.6389	1275.4	2.93	1.6355	1274.8	2.85	1.6321	1274.2
520	3.13	1.6480	1281.4	3.04	1.6445	1280.8	2.96	1.6411	1280.3	2.88	1.6377	1279.7
530	3.17	1.6534	1286.8	3.08	1.6500	1286.2	3.00	1.6466	1285.7	2.92	1.6433	1285.2
540	3.21	1.6588	1292.1	3.12	1.6554	1291.6	3.03	1.6520	1291.1	2.95	1.6487	1290.6
550	3.25	1.6641	1297.4	3.16	1.6607	1297.0	3.07	1.6574	1296.5	2.99	1.6541	1296.0
600	3.43	1.6896	1323.8	3.34	1.6863	1323.4	3.25	1.6830	1323.0	3.02	1.6594	1301.4
650	3.61	1.7136	1349.8	3.51	1.7104	1349.5	3.42	1.7072	1349.1	3.06	1.6646	1306.7
700	3.79	1.7364	1375.6	3.68	1.7331	1375.4	3.59	1.7300	1375.1	3.09	1.6698	1312.0
750	3.96	1.7581	1401.3	3.85	1.7549	1401.1	3.75	1.7518	1400.9	3.13	1.6749	1317.3
800	4.14	1.7789	1427.0	4.02	1.7757	1426.8	3.92	1.7727	1426.6	3.16	1.6799	1322.6
850	4.31	1.7989	1452.7	4.19	1.7958	1452.6	4.08	1.7927	1452.4	3.33	1.7041	1348.8
900	4.49	1.8183	1478.6	4.36	1.8152	1478.5	4.25	1.8121	1478.3	3.49	1.7269	1374.8

P*	200 [381.9]			205 [383.9]			210 [386.0]			215 [388.0]		
°F.	v	Φ	H	v	Φ	H	v	Φ	H	v	Φ	H
Sat.	2.29	1.5456	1198.5	2.24	1.5434	1198.7	2.19	1.5413	1199.0	2.14	1.5392	1199.2
390	2.32	1.5516	1203.6	2.26	1.5479	1202.6	2.20	1.5443	1201.6	2.15	1.5407	1200.5
400	2.36	1.5589	1209.8	2.30	1.5552	1208.8	2.24	1.5517	1207.9	2.18	1.5482	1206.9
410	2.40	1.5660	1215.9	2.34	1.5624	1215.0	2.28	1.5589	1214.1	2.22	1.5554	1213.1
420	2.44	1.5729	1221.9	2.38	1.5693	1221.1	2.32	1.5659	1220.2	2.26	1.5625	1219.3
430	2.48	1.5796	1227.9	2.42	1.5761	1227.1	2.35	1.5727	1226.2	2.29	1.5694	1225.4
440	2.52	1.5862	1233.8	2.45	1.5828	1233.0	2.39	1.5794	1232.2	2.33	1.5761	1231.4
450	2.56	1.5927	1239.7	2.49	1.5893	1238.9	2.43	1.5859	1238.1	2.36	1.5827	1237.4
460	2.59	1.5990	1245.5	2.53	1.5956	1244.7	2.46	1.5923	1244.0	2.40	1.5891	1243.3
470	2.63	1.6052	1251.2	2.56	1.6019	1250.5	2.50	1.5986	1249.8	2.43	1.5954	1249.1
480	2.67	1.6113	1256.9	2.60	1.6080	1256.2	2.53	1.6047	1255.5	2.47	1.6015	1254.8
490	2.70	1.6172	1262.5	2.63	1.6140	1261.8	2.57	1.6108	1261.2	2.50	1.6076	1260.5
500	2.74	1.6231	1268.1	2.67	1.6199	1267.4	2.60	1.6167	1266.9	2.54	1.6136	1266.2
510	2.77	1.6288	1273.6	2.70	1.6256	1273.0	2.63	1.6225	1272.5	2.57	1.6194	1271.9
520	2.81	1.6345	1279.1	2.74	1.6313	1278.6	2.67	1.6282	1278.0	2.60	1.6251	1277.4
530	2.84	1.6400	1284.6	2.77	1.6369	1284.1	2.70	1.6338	1283.5	2.64	1.6307	1283.0
540	2.88	1.6455	1290.1	2.80	1.6424	1289.6	2.73	1.6393	1289.0	2.67	1.6363	1288.5
550	2.91	1.6509	1295.5	2.84	1.6478	1295.0	2.77	1.6447	1294.5	2.70	1.6417	1294.0
560	2.95	1.6562	1300.9	2.87	1.6531	1300.4	2.80	1.6501	1299.9	2.73	1.6471	1299.4
570	2.98	1.6614	1306.2	2.90	1.6584	1305.8	2.83	1.6553	1305.3	2.76	1.6524	1304.9
580	3.01	1.6666	1311.6	2.94	1.6636	1311.1	2.86	1.6605	1310.7	2.80	1.6576	1310.3
590	3.05	1.6717	1316.9	2.97	1.6687	1316.5	2.90	1.6657	1316.1	2.83	1.6628	1315.6
600	3.08	1.6768	1322.2	3.00	1.6737	1321.8	2.93	1.6707	1321.4	2.86	1.6678	1321.0
650	3.24	1.7010	1348.5	3.16	1.6981	1348.2	3.09	1.6951	1347.8	3.01	1.6923	1347.5
700	3.40	1.7239	1374.5	3.32	1.7211	1374.3	3.24	1.7182	1374.0	3.16	1.7154	1373.7
750	3.56	1.7458	1400.4	3.48	1.7429	1400.2	3.39	1.7401	1399.9	3.31	1.7374	1399.7

* To the right of (P) appear steam pressures and corresponding saturated steam temperatures; the latter are in brackets.

P and v are respectively the absolute pressure and the volume in cb. ft. per lb.; and Φ and H are the entropy and total heat of superheated steam measured from 32 deg.

P*	220 [390.0]			225 [391.9]			230 [393.8]			235 [395.6]		
°F.	v	Φ	H	v	Φ	H	v	Φ	H	v	Φ	H
Sat.	2.09	1.5372	1199.5	2.05	1.5352	1199.7	2.00	1.5333	1199.9	1.96	1.5314	1200.1
400	2.13	1.5447	1205.9	2.08	1.5413	1204.9	2.02	1.5379	1204.0	1.98	1.5346	1202.9
410	2.17	1.5520	1212.2	2.11	1.5486	1211.3	2.06	1.5453	1210.3	2.01	1.5421	1209.4
420	2.20	1.5591	1218.4	2.15	1.5558	1217.5	2.10	1.5526	1216.6	2.05	1.5494	1215.7
430	2.24	1.5660	1224.5	2.18	1.5628	1223.7	2.13	1.5596	1222.8	2.08	1.5564	1222.0
440	2.27	1.5728	1230.6	2.22	1.5696	1229.8	2.16	1.5664	1229.0	2.11	1.5633	1228.2
450	2.31	1.5794	1236.6	2.25	1.5762	1235.8	2.20	1.5731	1235.0	2.15	1.5700	1234.3
460	2.34	1.5859	1242.5	2.28	1.5827	1241.8	2.23	1.5797	1241.0	2.18	1.5766	1240.3
470	2.38	1.5922	1248.4	2.32	1.5891	1247.7	2.26	1.5861	1246.9	2.21	1.5831	1246.2
480	3.41	1.5984	1254.2	2.35	1.5953	1253.5	2.30	1.5923	1252.8	2.24	1.5894	1252.1
490	2.44	1.6045	1259.9	2.38	1.6014	1259.3	2.33	1.5985	1258.6	2.28	1.5955	1257.9
500	2.47	1.6105	1265.6	2.42	1.6074	1265.0	2.36	1.6045	1264.4	2.31	1.6016	1263.7
510	2.51	1.6163	1271.3	2.45	1.6133	1270.7	2.39	1.6104	1270.1	2.34	1.6075	1269.5
520	2.54	1.6221	1276.9	2.48	1.6191	1276.3	2.42	1.6162	1275.7	2.37	1.6134	1275.1
530	2.57	1.6277	1282.5	2.51	1.6248	1281.9	2.45	1.6219	1281.3	2.40	1.6191	1280.8
540	2.60	1.6333	1288.0	2.54	1.6304	1287.5	2.49	1.6275	1286.9	2.43	1.6247	1286.4
550	2.64	1.6388	1293.5	2.57	1.6359	1293.0	2.52	1.6331	1292.5	2.46	1.6303	1292.0
560	2.67	1.6442	1299.0	2.60	1.6413	1298.5	2.55	1.6385	1298.0	2.49	1.6357	1297.5
570	2.70	1.6495	1304.4	2.64	1.6466	1303.9	2.58	1.6438	1303.5	2.52	1.6411	1303.0
580	2.73	1.6547	1309.8	2.67	1.6519	1309.4	2.61	1.6491	1308.9	2.55	1.6464	1308.5
590	2.76	1.6599	1315.2	2.70	1.6571	1314.8	2.64	1.6543	1314.3	2.58	1.6516	1313.9
600	2.79	1.6650	1320.6	2.73	1.6622	1320.2	2.67	1.6594	1319.7	2.61	1.6567	1319.3
650	2.94	1.6895	1347.1	2.88	1.6868	1346.8	2.81	1.6841	1346.5	2.75	1.6815	1346.1
700	3.09	1.7126	1373.4	3.02	1.7100	1373.1	2.95	1.7073	1372.8	2.89	1.7047	1372.5
750	3.24	1.7346	1399.5	3.16	1.7320	1399.2	3.09	1.7294	1399.0	3.03	1.7269	1398.8
800	3.38	1.7557	1425.5	3.30	1.7531	1425.3	3.23	1.7505	1425.1	3.16	1.7480	1424.9

P*	240 [397.5]			245 [399.3]			250 [401.1]			255 [402.9]		
°F.	v	Φ	H	v	Φ	H	v	Φ	H	v	Φ	H
Sat.	1.92	1.5295	1200.3	1.88	1.5276	1200.5	1.846	1.5258	1200.6	1.811	1.5241	1200.8
400	1.93	1.5314	1202.0									
410	1.96	1.5389	1208.4	1.92	1.5357	1207.5	1.877	1.5326	1206.5	1.835	1.5295	1205.6
420	2.00	1.5462	1214.8	1.95	1.5430	1213.9	1.910	1.5400	1213.0	1.868	1.5369	1212.1
430	2.03	1.5533	1221.1	1.99	1.5502	1220.2	1.942	1.5472	1219.4	1.900	1.5442	1218.5
440	2.07	1.5602	1227.3	2.02	1.5572	1226.5	1.974	1.5542	1225.7	1.932	1.5513	1224.8
450	2.10	1.5670	1233.5	2.05	1.5640	1232.7	2.006	1.5611	1231.9	1.963	1.5582	1231.1
460	2.13	1.5736	1239.5	2.08	1.5707	1238.8	2.038	1.5678	1238.0	1.994	1.5649	1237.2
470	2.16	1.5801	1245.5	2.11	1.5772	1244.8	2.069	1.5743	1244.0	2.025	1.5715	1243.3
480	2.19	1.5864	1251.4	2.15	1.5836	1250.7	2.099	1.5807	1250.0	2.055	1.5779	1249.3
490	2.23	1.5926	1257.3	2.18	1.5898	1256.6	2.129	1.5870	1255.9	2.085	1.5842	1255.3
500	2.26	1.5987	1263.1	2.21	1.5959	1262.5	2.159	1.5931	1261.8	2.114	1.5904	1261.2
510	2.29	1.6047	1268.8	2.24	1.6019	1268.2	2.189	1.5991	1267.6	2.143	1.5964	1267.0
520	2.32	1.6105	1274.5	2.27	1.6078	1274.0	2.218	1.6050	1273.4	2.172	1.6024	1272.8
530	2.35	1.6163	1280.2	2.30	1.6135	1279.7	2.247	1.6108	1279.1	2.201	1.6082	1278.5
540	2.38	1.6220	1285.9	2.33	1.6192	1285.3	2.276	1.6166	1284.8	2.229	1.6139	1284.2
550	2.41	1.6275	1291.4	2.36	1.6248	1290.9	2.305	1.6222	1290.4	2.257	1.6196	1289.8
560	2.44	1.6330	1297.0	2.38	1.6303	1296.5	2.333	1.6277	1296.0	2.285	1.6251	1295.5
570	2.46	1.6384	1302.5	2.41	1.6357	1302.0	2.361	1.6331	1301.6	2.313	1.6305	1301.1
580	2.49	1.6437	1308.0	2.44	1.6410	1307.5	2.389	1.6384	1307.1	2.340	1.6359	1306.6
590	2.52	1.6489	1313.5	2.47	1.6463	1313.0	2.417	1.6437	1312.6	2.368	1.6412	1312.1
600	2.55	1.6541	1318.9	2.50	1.6514	1318.5	2.444	1.6489	1318.1	2.395	1.6464	1317.6
650	2.69	1.6789	1345.8	2.63	1.6763	1345.4	2.579	1.6738	1345.1	2.527	1.6714	1344.7
700	2.83	1.7022	1372.3	2.77	1.6997	1372.0	2.711	1.6973	1371.7	2.657	1.6949	1371.4
750	2.96	1.7244	1398.5	2.90	1.7219	1398.3	2.840	1.7195	1398.0	2.784	1.7172	1397.8
800	3.09	1.7456	1424.7	3.03	1.7431	1424.5	2.968	1.7408	1424.3	2.909	1.7385	1424.1

* To the right of (P) appear steam pressures and corresponding saturated steam temperatures; the latter are in brackets.

P and v are respectively the absolute pressure and the volume in cb. ft. per lb.; and Φ and H are the entropy and total heat of superheated steam measured from 32 deg.

P*	260 [404.5]			265 [406.2]			270 [407.9]			275 [409.6]		
°F	v	Φ	H	v	Φ	H	v	Φ	H	v	Φ	H
Sat.	1.777	1.5223	1201.0	1.745	1.5206	1201.1	1.713	1.5189	1201.2	1.683	1.5172	1201.4
410	1.795	1.5264	1204.6	1.757	1.5234	1203.6	.....	.....	.....	.....	.....	.....
420	1.828	1.5339	1211.2	1.789	1.5309	1210.2	1.751	1.5281	1209.3	1.715	1.5252	1208.4
430	1.860	1.5413	1217.6	1.820	1.5383	1216.7	1.782	1.5355	1215.8	1.746	1.5326	1215.0
440	1.891	1.5484	1224.0	1.851	1.5455	1223.1	1.813	1.5427	1222.3	1.776	1.5399	1221.4
450	1.922	1.5553	1230.3	1.882	1.5525	1229.5	1.843	1.5497	1228.6	1.806	1.5469	1227.8
460	1.952	1.5621	1236.5	1.912	1.5593	1235.7	1.873	1.5565	1234.9	1.835	1.5538	1234.1
470	1.982	1.5687	1242.6	1.942	1.5659	1241.8	1.902	1.5632	1241.1	1.864	1.5605	1240.3
480	2.012	1.5752	1248.6	1.971	1.5724	1247.9	1.931	1.5698	1247.2	1.893	1.5671	1246.5
490	2.042	1.5815	1254.6	2.000	1.5788	1253.9	1.960	1.5762	1253.2	1.921	1.5735	1252.6
500	2.071	1.5877	1260.5	2.029	1.5850	1259.9	1.988	1.5824	1259.2	1.949	1.5798	1258.6
510	2.099	1.5938	1266.4	2.057	1.5911	1256.8	2.016	1.5885	1265.1	1.977	1.5860	1264.5
520	2.128	1.5998	1272.2	2.085	1.5971	1271.6	2.044	1.5946	1271.0	2.004	1.5920	1270.4
530	2.156	1.6056	1278.0	2.113	1.6030	1277.4	2.071	1.6005	1276.8	2.031	1.5980	1276.2
540	2.184	1.6113	1283.7	2.140	1.6088	1283.1	2.098	1.6063	1282.6	2.058	1.6038	1282.0
550	2.212	1.6170	1289.4	2.168	1.6145	1288.8	2.125	1.6120	1288.3	2.084	1.6095	1287.8
560	2.239	1.6225	1295.0	2.195	1.6200	1294.5	2.152	1.6176	1294.0	2.110	1.6151	1293.5
570	2.266	1.6280	1300.6	2.221	1.6255	1300.1	2.178	1.6231	1299.6	2.136	1.6206	1299.1
580	2.293	1.6334	1306.2	2.248	1.6309	1305.7	2.204	1.6285	1305.2	2.162	1.6261	1304.7
590	2.320	1.6387	1311.7	2.274	1.6362	1311.2	2.230	1.6338	1310.8	2.188	1.6314	1310.3
600	2.347	1.6439	1317.2	2.301	1.6415	1316.7	2.256	1.6391	1316.3	2.213	1.6367	1315.9
650	2.477	1.6690	1344.4	2.429	1.6666	1344.0	2.382	1.6643	1343.7	2.338	1.6620	1343.3
700	2.605	1.6925	1371.1	2.555	1.6902	1370.8	2.506	1.6879	1370.5	2.459	1.6857	1370.2
750	2.730	1.7149	1397.6	2.678	1.7126	1397.3	2.627	1.7104	1397.1	2.578	1.7082	1396.8
800	2.853	1.7362	1423.8	2.798	1.7339	1423.6	2.746	1.7317	1423.4	2.695	1.7296	1423.2
850	2.974	1.7566	1450.1	2.917	1.7544	1449.9	2.863	1.7522	1449.7	2.810	1.7501	1449.6

P*	280 [411.2]			285 [412.8]			290 [414.4]			295 [415.9]		
°F	v	Φ	H	v	Φ	H	v	Φ	H	v	Φ	H
Sat.	1.654	1.5156	1201.5	1.625	1.5139	1201.6	1.598	1.5123	1201.7	1.571	1.5108	1201.8
420	1.680	1.5223	1207.4	1.647	1.5195	1206.5	1.614	1.5167	1205.5	1.583	1.5139	1204.6
430	1.711	1.5298	1214.1	1.677	1.5270	1213.2	1.644	1.5243	1212.3	1.612	1.5216	1211.4
440	1.741	1.5371	1220.6	1.707	1.5344	1219.7	1.673	1.5317	1218.9	1.641	1.5290	1218.0
450	1.770	1.5442	1227.0	1.736	1.5415	1226.2	1.702	1.5389	1225.4	1.670	1.5362	1224.5
460	1.799	1.5511	1233.3	1.764	1.5485	1232.6	1.730	1.5459	1231.8	1.698	1.5432	1231.0
470	1.828	1.5579	1239.6	1.792	1.5553	1238.8	1.758	1.5527	1238.1	1.725	1.5501	1237.3
480	1.856	1.5645	1245.8	1.820	1.5619	1245.0	1.786	1.5594	1244.3	1.753	1.5568	1243.6
490	1.884	1.5710	1251.9	1.848	1.5684	1251.2	1.813	1.5659	1250.5	1.780	1.5634	1249.8
500	1.911	1.5773	1257.9	1.875	1.5748	1257.3	1.840	1 5723	1256.6	1.806	1.5698	1255.9
510	1.939	1.5835	1263.9	1.902	1.5810	1263.3	1.866	1.5785	1262.6	1.832	1.5761	1262.0
520	1.966	1.5895	1269.8	1.929	1.5871	1269.2	1.893	1.5846	1268.6	1.858	1.5823	1268.0
530	1.992	1.5955	1275.7	1.955	1.5931	1275.1	1.919	1.5906	1274.5	1.884	1.5883	1273.9
540	2.019	1.6013	1281.5	1.981	1.5989	1280.9	1.944	1.5965	1280.4	1.909	1.5942	1279.8
550	2.045	1.6071	1287.2	2.007	1.6047	1286.7	1.970	1.6023	1286.2	1.934	1.6000	1285.6
560	2.070	1.6127	1292.9	2.032	1.6103	1292.5	1.995	1.6080	1291.9	1.959	1.6057	1291.4
570	2.096	1.6182	1298.6	2.057	1.6159	1298.2	2.020	1.6136	1297.6	1.984	1.6113	1297.1
580	2.122	1.6237	1304.3	2.082	1.6214	1303.8	2.045	1.6191	1303.3	2.008	1.6168	1302.8
590	2.147	1.6291	1309.9	2.107	1.6268	1309.4	2.069	1.6245	1309.0	2.032	1.6222	1308.5
600	2.172	1.6344	1315.5	2.132	1.6321	1315.0	2.093	1.6298	1314.6	2.056	1.6276	1314.1
650	2.295	1.6597	1342.9	2.253	1.6575	1342.6	2.213	1.6553	1342.2	2.174	1.6532	1341.8
700	2.414	1.6835	1369.9	2.371	1.6813	1369.6	2.329	1.6792	1369.3	2.288	1.6771	1369.0
750	2.531	1.7060	1396.6	2.486	1.7039	1396.3	2.442	1.7018	1396.1	2.400	1.6997	1395.8
800	2.646	1.7274	1423.0	2.599	1.7253	1422.8	2.553	1.7233	1422.6	2.509	1.7213	1422.4
850	2.759	1.7480	1449.4	2.710	1.7459	1449.2	2.663	1.7439	1449.0	2.617	1.7419	1448.9
900	2.872	1.7677	1475.7	2.821	1.7657	1475.6	2.772	1.7637	1475.4	2.724	1.7617	1475.3

* To the right of (P) appear steam pressures and corresponding saturated steam temperatures; the latter are in brackets.

P and v are respectively the absolute pressure and the volume in cb. ft. per lb.; and Φ and H are the entropy and total heat of superheated steam measured from 32 deg.

P*	300 [417.5]			310 [420.5]			320 [423.4]			330 [426.3]		
°F.	v	Φ	H	v	Φ	H	v	Φ	H	v	Φ	H
Sat.	1.545	1.5092	1201.9	1.496	1.5062	1202.0	1.450	1.5032	1202.2	1.407	1.5004	1202.3
430	1.582	1.5189	1210.4	1.523	1.5136	1208.6	1.469	1.5084	1206.8	1.417	1.5033	1204.9
440	1.610	1.5263	1217.1	1.551	1.5211	1215.4	1.496	1.5160	1213.6	1.444	1.5110	1211.8
450	1.638	1.5336	1223.7	1.579	1.5285	1222.0	1.523	1.5235	1220.3	1.471	1.5186	1218.6
460	1.666	1.5407	1230.2	1.606	1.5357	1228.6	1.550	1.5307	1227.0	1.497	1.5259	1225.3
470	1.693	1.5476	1236.6	1.633	1.5427	1235.0	1.576	1.5378	1233.5	1.522	1.5330	1231.9
480	1.720	1.5544	1242.9	1.659	1.5495	1241.4	1.602	1.5447	1239.9	1.547	1.5400	1238.4
490	1.747	1.5610	1249.1	1.685	1.5561	1247.7	1.627	1.5514	1246.3	1.572	1.5468	1244.9
500	1.773	1.5674	1255.2	1.711	1.5626	1253.9	1.652	1.5580	1252.6	1.597	1.5534	1251.2
510	1.799	1.5737	1261.3	1.736	1.5690	1260.0	1.677	1.5644	1258.8	1.621	1.5599	1257.4
520	1.825	1.5799	1267.4	1.761	1.5752	1266.1	1.701	1.5707	1264.9	1.645	1.5662	1263.6
530	1.850	1.5859	1273.3	1.786	1.5813	1272.1	1.725	1.5768	1271.0	1.669	1.5724	1269.7
540	1.875	1.5919	1279.2	1.810	1.5873	1278.1	1.749	1.5829	1277.0	1.692	1.5785	1275.8
550	1.900	1.5977	1285.1	1.834	1.5932	1284.0	1.773	1.5888	1282.9	1.715	1.5845	1281.8
560	1.924	1.6034	1290.9	1.858	1.5990	1289.8	1.796	1.5946	1288.8	1.738	1.5903	1287.7
570	1.949	1.6090	1296.6	1.882	1.6046	1295.6	1.819	1.6003	1294.6	1.761	1.5961	1293.6
580	1.973	1.6146	1302.4	1.905	1.6102	1301.4	1.842	1.6059	1300.4	1.783	1.6017	1299.5
590	1.997	1.6200	1308.1	1.929	1.6157	1307.1	1.865	1.6114	1306.2	1.805	1.6073	1305.2
600	2.020	1.6254	1313.7	1.952	1.6211	1312.8	1.887	1.6169	1311.9	1.827	1.6128	1311.0
650	2.136	1.6510	1341.5	2.065	1.6469	1340.7	1.997	1.6428	1340.0	1.934	1.6388	1339.3
700	2.249	1.6750	1368.7	2.174	1.6710	1368.1	2.104	1.6670	1367.5	2.038	1.6632	1366.9
750	2.359	1.6977	1395.6	2.281	1.6937	1395.0	2.208	1.6898	1394.5	2.140	1.6861	1394.0
800	2.467	1.7193	1422.2	2.386	1.7153	1421.7	2.310	1.7115	1421.3	2.239	1.7078	1420.9
850	2.573	1.7399	1448.7	2.489	1.7360	1448.3	2.410	1.7323	1447.9	2.336	1.7286	1447.6
900	2.678	1.7597	1475.1	2.591	1.7559	1474.8	2.509	1.7522	1474.5	2.443	1.7486	1474.2

P*	340 [429.1]			360 [434.6]			380 [439.8]			400 [444.8]		
°F.	v	Φ	H	v	Φ	H	v	Φ	H	v	Φ	H
Sat.	1.366	1.4976	1202.4	1.291	1.4922	1202.5	1.223	1.4871	1202.6	1.162	1.4821	1202.5
430	1.368	1.4983	1203.0	.....	.....	.....	.....	.....	.....	.....	.....	.....
440	1.395	1.5061	1210.0	.....	.....	.....	.....	.....	.....	.....	.....	.....
450	1.421	1.5137	1216.9	.....	.....	.....	.....	.....	.....	.....	.....	.....
460	1.447	1.5211	1223.7	1.355	1.5119	1220.4	1.272	1.5030	1217.0	1.198	1.4943	1213.6
470	1.472	1.5283	1230.4	1.379	1.5193	1227.2	1.296	1.5105	1224.0	1.221	1.5020	1220.7
480	1.497	1.5354	1236.9	1.403	1.5265	1233.9	1.319	1.5178	1230.8	1.243	1.5094	1227.7
490	1.521	1.5422	1243.4	1.427	1.5335	1240.5	1.342	1.5249	1237.5	1.265	1.5167	1234.6
500	1.545	1.5489	1249.8	1.450	1.5403	1247.0	1.364	1.5319	1244.2	1.287	1.5238	1241.3
510	1.569	1.5555	1256.1	1.473	1.5469	1253.4	1.386	1.5387	1250.7	1.309	1.5307	1248.0
520	1.592	1.5619	1262.4	1.495	1.5534	1259.8	1.408	1.5453	1257.2	1.330	1.5374	1254.6
530	1.615	1.5681	1268.5	1.517	1.5598	1266.1	1.429	1.5518	1263.6	1.350	1.5440	1261.1
540	1.638	1.5743	1274.6	1.539	1.5660	1272.3	1.451	1.5581	1269.9	1.371	1.5505	1267.5
550	1.661	1.5803	1280.7	1.561	1.5721	1278.4	1.472	1.5643	1276.1	1.391	1.5568	1273.8
560	1.683	1.5862	1286.6	1.582	1.5781	1284.5	1.492	1.5704	1282.3	1.411	1.5629	1280.0
570	1.705	1.5920	1292.6	1.604	1.5840	1290.5	1.513	1.5764	1288.4	1.430	1.5690	1286.2
580	1.727	1.5977	1298.5	1.625	1.5898	1296.5	1.533	1.5822	1294.4	1.450	1.5749	1292.4
590	1.749	1.6033	1304.3	1.645	1.5954	1302.4	1.553	1.5880	1300.4	1.469	1.5807	1298.5
600	1.770	1.6088	1310.1	1.666	1.6010	1308.2	1.572	1.5936	1306.4	1.488	1.5864	1304.5
650	1.875	1.6350	1338.5	1.766	1.6275	1337.0	1.669	1.6204	1335.4	1.581	1.6136	1333.9
700	1.976	1.6594	1366.2	1.863	1.6522	1365.0	1.761	1.6453	1363.7	1.669	1.6387	1362.4
750	2.075	1.6824	1393.5	1.957	1.6754	1392.4	1.851	1.6687	1391.4	1.755	1.6622	1390.3
800	2.172	1.7042	1420.4	2.049	1.6974	1419.5	1.939	1.6908	1418.6	1.839	1.6845	1417.7
850	2.267	1.7251	1447.2	2.139	1.7183	1446.5	2.024	1.7118	1445.7	1.921	1.7057	1444.9
900	2.360	1.7451	1473.9	2.228	1.7384	1473.3	2.109	1.7320	1472.6	2.002	1.7259	1472.0

* To the right of (P) appear steam pressures and corresponding saturated steam temperatures; the latter are in brackets.

P and v are respectively the absolute pressure and the volume in cb. ft. per lb.; and Φ and H are the entropy and total heat of superheated steam measured from 32 deg.

CHAPTER 13

FUEL

COAL in its different forms is the principal fuel used in boilers. Its application, analysis and purchase have been most highly developed. The use of oil is increasing rapidly, and other fuels are employed when factors of economy or delivery warrant. Natural gas and crude oil or petroleum have the highest heat value of the commercial gaseous and liquid fuels; and because of their ease of operation, gas and oil are highly regarded as fuels.

Classification of Coals

COAL is a dark brown or black mineral substance, found in the carboniferous geological formation. All coals are formed from vegetable growth fossilized by moisture, heat, pressure and time, and can be individually distinguished by the physical structure as well as by the chemical peculiarities. A broad classification includes wood fiber or cellulose, which is the lowest of the group, followed in order by peat, lignite, bituminous coal, semi-bituminous,

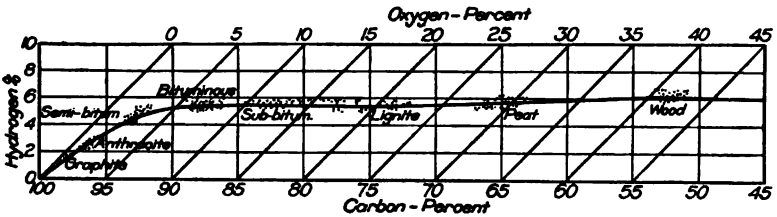

Fig. 203. Grouping Coals according to Chemical Constituents.

semi-anthracite, anthracite coal and graphite. The differences in composition are shown in Fig. 203, based on data prepared by the *Bureau of Mines*. Starting from the lowest in the group, each succeeding variety of coal is distinguished by an increase in carbon and a decrease in oxygen. The hydrogen remains practically constant for the lower part of the group but decreases rapidly in the higher part. The curve is plotted from analyses computed on a basis of coal free from moisture, ash, nitrogen and sulphur. Therefore, the sum of the carbon, hydrogen and oxygen content as given equals 100 per cent.

Wood is the representative of the organic substance from which coal is derived. The extreme variations of its properties explain the differences found in coal. The term wood includes trees, small plants, and mosses, which are composed chemically of cellulose, or of fiber and sap or sap deposits between the fibers. Actual wood has a higher carbon content than cellulose or moss. It contains from 15 to 25 per cent of moisture even when air dried. The ash content may be from 2 to 3 per cent. Dry wood has a heat value of 8000 to 9000 B.t.u., and ordinary fire wood of 5000 to 6000 B.t.u. per pound.

Peat is organic matter in the first stages of conversion to coal. It is found in swamps and bogs and consists of roots and fibers in every stage of decomposition, these containing 70 to 85 per cent of moisture. Its color varies from yellow, through brown, to black. Its percentage of nitrogen and oxygen is large and its volatile matter poorly combustible. Peat is valuable

as a fuel only after having been thoroughly dried. Air-dried peat has a heat value of 9000 B.t.u., and when completely dry the value may be over 10,000 B.t.u. per pound.

Lignite, sometimes called brown coal, is the next step from peat in the formation of coal. It contains from 30 to 50 per cent of water, this being reduced by air-drying to from 10 to 20 per cent. Lignite is of a woody texture and does not coke on being carbonized. Its heat value is between 7000 and 8000 B.t.u. per pound, while the ash content varies from 5 to 10 per cent. As it disintegrates rapidly on exposure, lignite cannot be shipped any distance except in cold weather when frozen.

Sub-bituminous coal is next to lignite in order of age. The chemical difference between it and lignite is not clearly defined and so it is sometimes called black lignite. However, the physical difference is marked. The sub-bituminous coal is black and shiny, has only a small trace of woody structure, contains less water and has a higher heat value than lignite. It differs from bituminous coals by the slacking it undergoes when exposed to the weather.

Bituminous coal includes the so-called soft coals, which vary in color from dark brown to pitch black. The important divisions of this group are the caking and the non-caking coals; both burn with a yellowish flame, and give off smoke. Caking coal has a tendency to fuse and swell in size during heating. Its high volatile content and richness in hydrocarbons make it valuable in the manufacture of coal gas. Non-caking coal burns freely without fusing, is therefore well adapted to burning on grates without interfering with the air supply required for combustion, and is used extensively under steam boilers. The heat value is between 14,000 and 15,000 B.t.u. per pound.

Semi-bituminous coal is brighter in appearance, and somewhat harder than bituminous coal, more nearly resembling anthracite. It is generally free burning, without smoke. It burns with a short flame and has a high heat value.

Semi-anthracite coal is harder than semi-bituminous. It burns freely with a short flame, yielding great heat with little clinker and ash. It swells considerably in size but does not cake, and tends to split up on burning. Semi-anthracite when newly fractured will soil or soot the hand, while pure anthracite will not. There is only a small amount of this coal in the United States.

Anthracite, commonly called hard coal, is practically all fixed carbon. It generally occurs with slate streaks, has a deep black color, and a shiny semi-metallic luster. It contains little hydrocarbon, is slow to ignite, and burns with a short yellowish flame which changes to a faint blue, but with little or no smoke. Anthracite does not soften or swell, but breaks into small pieces when rapidly heated. Because the price of the coal decreases with the size, anthracite of less than ¾-in. diameter is generally used for steam purposes. The smaller sizes often contain slate which cannot be distinguished, so that the ash content is high. Anthracite has a specific gravity varying from 1.3 to 1.8.

Graphite is the highest of the coal group but is not available for fuel because of the high temperature required for its ignition. While practically pure carbon it can be burned only with difficulty in the hottest fire and when mixed with other coals.

The classification of coals by name, as above, is only a convenience. The different coals overlap to some extent and a technical description is necessary. For this purpose the chemical properties of the coals have generally been used, as shown in Table 64, by *C. E. Lucke. Campbell* proposes a classification on the ratio of the total carbon (C) to the total hydrogen (H)

of the ultimate analysis. The coals are divided into twelve groups, but sufficient data to fix the values marked (?) are not available. *Fraser* suggests the fixed carbon (f. c.) divided by the volatile combustible matter (v. m.) of the proximate analysis, while *Muck* recommends the total carbon content of dry and ash free coal, as a standard. Another classification is based on the fixed carbon in the combustible, as in the last column of the tabulation.

Table 64. Classification of Coal by Composition.

Class.	Coal	Campbell	Fraser	Muck	General
		C/H	f. c./v.m.	% C in Combustible	% f. c. in Combustible
A	Graphite and graphite coal.....	∞ to ?	Anthracite 100 to 12	Anthracite 95	Anthracite 97 to 92.5
B	Anthracite.....	? to 30			
C	Anthracite.....	30 to 26			
D	Semi-anthracite.....	26 to 23	12 to 8		92.5 to 87.5
E	Semi-bituminous.....	23 to 20	8 to 5	Common Coal 82	87.5 to 75
F	Bituminous.....	20 to 17	Bituminous 5 to 0		Bituminous, Eastern 75 to 60
G	Bituminous.....	17 to 14.4			
H	Bituminous.....	14.4 to 12.5			Bituminous, Western 65 to 50
I	Bituminous.....	12.5 to 11.2			
J	Lignite.....	11.2 to 9.3	.....	70	Under 50
K	Peat.....	9.3 to ?		59	
L	Wood or Cellulose...	7.2		50	

Cannel coal differs from the general group of coals and is therefore not included in the previous classification. It lies somewhere between bituminous and sub-bituminous but is considerably higher in hydrogen than either. It is said that the name is derived from the fact that this coal burns like a candle. Cannel coal is hard, dull black, easily broken, and gives a large amount of gas when heated. It is valuable, therefore, as an "enricher" in gas making.

Location of Coal Deposits in the United States

THE map, Fig. 204, shows the areas in which coals are mined, the older deposits being grouped into seven fields. Some graphite coal is found in Rhode Island; most of the anthracite comes from Eastern Pennsylvania; semi-bituminous comes mainly from the northeast section of the Appalachian field; bituminous coals are found in the remaining larger fields; sub-bitumi-

Arapahoe County Court House and Jail, Denver, Colorado, equipped with Heine Boilers.

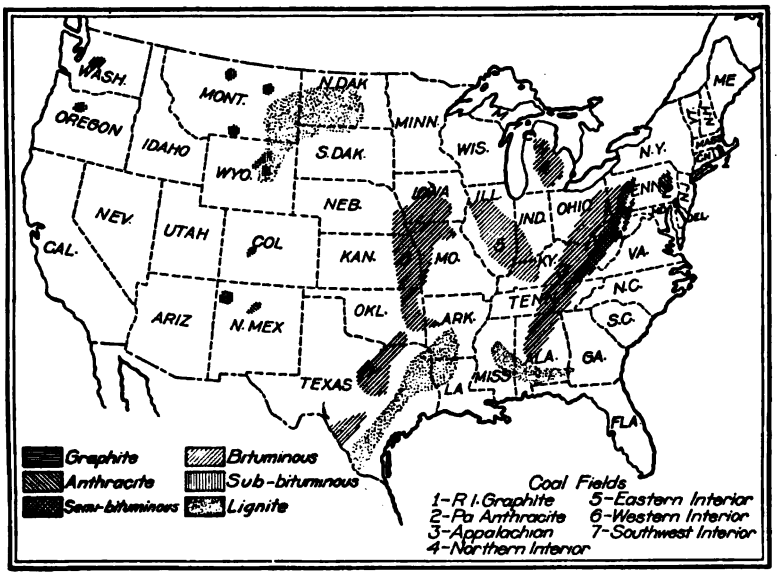

Fig. 204. Coal Fields of the United States.

nous is found mostly in the western states, and lignite comes from the South and Northwest. The coals from all these localities have been analyzed by the *Bureau of Mines,* the compositions being listed in Table 65.

Composition of Coals

IN burning coal, first the moisture is driven off, next the volatile matter, and then the remaining fixed carbon ignites, leaving a residue of ash. These four constituents of coal are ordinarily determined by the "proximate analysis," which gives information sufficient for all practical purposes. The chemical elements are accurately determined by the "ultimate analysis" which gives the percentage of carbon, hydrogen, nitrogen, sulphur and ash. The percentage of oxygen is taken as the difference between 100 and the sum of the other five constituents because there is no simple direct method of determining it.

The results for both analyses, Table 65, are for coal "as received," which means that the weight of moisture in the actual sample, as received at the laboratory or in the coal at the point of sampling in the mine, is included in the test samples. However, both proximate and ultimate analyses can be made or computed to a dry or "moisture free" condition or to a basis of "moisture-and-ash-free" coal. The moisture-free analysis gives the composition and heat value of dry coal while the moisture-and-ash-free analysis gives the approximate composition and heat value of the dry combustible matter. Table 68, for a typical coal sample, indicates the three values.

Commercial Sizes of Coals

FOR commercial purposes, coals are classified by trade names that designate the size, but the names and sizes vary in different localities. In bituminous fields this variation is marked, while in the anthracite trade a fair standard exists, as indicated in Table 66.

Table 65. Composition and Heat Value of United States Coals.

County, Bed or Local Name	Proximate Analysis "As Received"				Ultimate Analysis "As Received"					Heat Value, B.t.u. per Lb. "As Received"
	Moisture	Volatile Matter	Fixed Carbon	Ash	Sulphur	Hydrogen	Carbon	Nitrogen	Oxygen	
Alabama										
Bibb, Belle Ellen	3.16	31.05	59.56	6.23	1.20	5.33	78.28	1.37	7.59	14,141
Jefferson, Dolomite	3.16	25.40	67.75	3.69	0.56	5.05	82.28	1.36	7.06	14,616
Jefferson, Littleton	2.53	26.94	59.48	11.05	0.79	4.80	74.44	1.59	7.33	13,286
St. Clair, Davis (Tillman Sta.)	3.39	30.69	57.08	8.84	2.34	5.18	73.81	1.53	8.30	13,363
Shelby, Straven	3.33	32.03	58.66	5.48	0.97	5.29	77.26	1.25	9.75	13,799
Tuscaloosa, Avernant	2.62	24.18	64.11	9.09	0.64	4.72	77.52	1.48	6.55	13,729
Alaska										
Alaska Peninsula, Chignik Bay, Thompson Valley	10.77	30.37	43.99	14.87	0.70	4.98	55.27	0.61	23.57	9,641
Bering River, Hartline	4.75	13.72	63.31	18.22	0.62	3.14	65.93	1.32	10.77	10,820
Cook Inlet, Port Graham	19.96	38.73	32.46	8.85	0.52	5.81	49.53	0.92	34.37	8,793
Matanuska, Matanuska River	1.72	24.36	58.97	14.95	0.46	4.46	70.78	1.42	7.93	12,585
Seward Peninsula, Chicago Creek	37.82	26.14	32.16	3.88	0.65	6.12	41.79	0.67	45.89	.....
Arizona										
Navajo, Oraibi	9.88	32.64	46.86	10.62	1.12	5.42	62.00	1.13	19.71	10,800
Arkansas										
Logan, Paris	2.77	14.69	73.47	9.07	2.79	4.02	78.71	1.46	3.95	13,774
Pope, Russellville	2.07	9.81	78.82	9.30	1.74	3.62	80.28	1.47	3.59	13,702
Sebastian, Greenwood	3.21	14.84	72.66	9.29	3.12	3.75	78.37	1.52	3.95	13,588
California										
Monterey, Stone Canyon	6.95	46.69	40.13	6.23	4.17	6.28	66.01	1.17	16.14	12,477
Colorado										
Boulder, Lafayette	19.15	30.82	44.27	5.76	0.25	5.93	56.38	1.08	30.60	9,616
El Paso, Pikeview	26.20	29.67	37.67	6.46	0.30	6.13	49.36	0.66	37.09	8,352
Garfield, Newcastle	4.45	42.05	49.56	3.94	0.44	5.43	72.57	1.72	15.90	13,129
Montezuma, Cortez	3.89	37.01	46.58	12.52	7.04	4.96	66.19	1.16	8.13	12,341
Weld, Platteville	28.90	28.83	37.25	5.02	0.46	6.64	48.36	0.93	38.59	8,465
Georgia										
Chattooga, Menlo	3.80	15.88	65.83	14.49	1.27	4.32	70.59	1.09	8.24	12,791
Idaho										
Fremont, Hayden	11.45	37.24	47.01	4.30	0.54	5.94	68.09	1.40	19.73	12,094
Illinois										
Clinton, *Germantown	11.35	34.62	40.63	13.40	4.76	5.41	57.36	1.05	18.02	10,733
Franklin, Zeigler	11.82	27.66	55.10	5.42	0.46	5.44	67.87	1.34	19.47	11,961
La Salle, *La Salle	12.39	36.89	41.80	8.92	3.92	5.85	61.29	1.00	19.02	11,399
Macoupin, *Staunton	13.54	35.69	40.03	10.74	4.03	5.71	58.69	0.95	19.88	10,807
Madison, Collinsville	12.70	36.36	41.47	9.47	3.67	5.81	60.91	0.99	19.15	10,989
Marion, *Centralia	9.95	34.76	42.06	13.23	3.87	5.25	59.64	1.04	16.97	10,960
Montgomery, Panama	13.31	33.62	41.34	11.73	3.75	5.19	59.07	0.95	19.31	10,548
St. Clair, *Shiloh	11.69	35.70	39.42	13.19	4.38	5.46	57.15	0.94	18.88	10,899
Saline, Harrisburg	6.01	32.37	54.32	7.30	1.66	5.27	71.63	1.34	12.80	12,793
Sangamon, *Auburn	16.00	32.41	37.82	13.77	4.05	5.55	53.89	0.91	21.83	9,940
Williamson, Carterville	9.18	27.30	55.40	8.12	0.90	5.10	68.45	1.14	16.29	12,015
Williamson, Herrin	8.80	29.85	53.83	7.52	1.13	5.08	68.70	1.33	16.24	12,222
Indiana										
Clay, *Brazil	16.91	26.85	38.87	17.37	1.89	5.48	52.97	1.01	21.28	9,524
Greene, *Linton	13.58	32.07	46.20	8.15	0.91	5.65	63.53	1.42	20.34	11,419
Knox, *Bicknell	12.08	32.48	44.42	11.02	3.65	5.34	60.45	0.89	18.65	11,011
Parke, *Rosedale	10.72	39.29	41.42	8.57	3.83	5.86	63.48	1.16	17.10	11,767
Pike, *Littles	11.12	36.98	42.55	9.35	3.78	5.63	63.01	1.13	17.10	11,549
Sullivan, Dugger	13.48	32.51	48.38	5.63	1.09	5.94	66.01	1.49	19.84	11,788
Vigo, *Macksville	12.82	34.30	42.08	10.30	3.27	5.66	61.16	1.03	18.58	11,119
Warrick, Elberfeld	9.69	38.59	41.04	10.68	4.79	5.39	62.36	1.28	15.50	11,412
Iowa										
Appanoose, *Centerville	14.08	35.59	39.37	10.96	4.26	5.57	58.49	0.90	19.82	10,723
Lucas, *Chariton	15.39	30.49	41.49	12.63	3.19	5.74	55.81	1.14	21.49	10,242
Polk, *Altoona	13.88	36.94	35.17	14.01	6.15	5.52	54.68	0.84	18.80	10,244
Wapello, *Laddsdale	8.24	30.74	45.02	16.00	5.03	4.81	59.82	0.94	13.40	11,027
Kansas										
Cherokee, *Scammon	2.50	33.80	51.25	12.45	5.68	4.91	69.07	1.20	6.69	12,900
Crawford, Fuller	4.85	33.53	52.52	9.10	4.95	5.08	71.20	1.24	8.43	12,942
Leavenworth, Lansing	11.10	35.51	40.69	12.70	3.99	5.30	60.72	1.13	16.16	11,065
Linn, *Jewett	9.04	29.69	45.55	15.72	3.72	5.01	60.99	1.06	13.50	11,142

*Indicates samples from car deliveries; all others are mine samples.

Table 65. Composition and Heat Value of United States Coals—Cont.

County, Bed or Local Name	Proximate Analysis "As Received"				Ultimate Analysis "As Received"					Heat Value, B.t.u. per Lb. "As Received"
	Moisture	Volatile Matter	Fixed Carbon	Ash	Sulphur	Hydrogen	Carbon	Nitrogen	Oxygen	
Kentucky										
Johnson, Flambeau	2.36	48.40	38.75	10.49	1.20	6.47	71.98	1.16	8.70	13,770
Muhlenberg, Central City	8.78	37.76	45.98	7.58	2.65	5.52	67.65	1.42	15.18	12,208
Ohio, McHenry	9.89	35.94	43.36	10.81	3.64	5.37	62.27	1.33	16.58	11,392
Pike, Hellier	3.73	30.01	59.42	6.84	0.56	5.07	76.30	1.06	10.17	13,649
Webster, Wheatcroft	6.29	31.97	54.13	7.61	1.35	5.49	69.78	1.37	14.40	12,874
Maryland										
Allegany, Eckhart	2.70	14.50	74.00	8.80	1.00	4.44	79.21	1.69	4.86	13,910
Allegany, Frostburg	3.20	14.50	75.60	6.70	0.92	4.51	80.99	1.77	5.11	14,100
Allegany, Lord	2.26	16.05	75.86	5.83	0.79	4.68	82.45	1.73	4.52	14,483
Allegany, Midland	3.10	15.50	74.50	6.90	0.86	4.57	80.71	1.69	5.32	14,070
Allegany, Washington	3.40	15.00	75.10	6.50	1.04	4.63	80.69	1.55	5.60	14,160
Michigan										
Saginaw, Saginaw	11.91	31.50	49.75	6.84	1.24	5.84	66.56	1.19	18.33	11,781
Missouri										
Adair, Kirksville	15.98	38.15	37.18	8.69	4.12	5.90	59.09	0.94	21.26	10,798
Caldwell, Hamilton	10.99	35.00	41.37	12.64	4.81	5.43	60.40	1.16	15.56	11,093
Henry, Windsor	13.51	33.24	41.88	11.37	4.08	5.89	59.16	0.85	18.65	10,779
Lafayette, Napoleon	13.44	32.00	40.27	14.29	3.08	5.62	55.83	0.98	20.20	10,232
Macon, Bevier	16.25	33.38	40.97	9.40	3.41	5.75	58.25	1.05	22.14	10,625
Ray, Richmond	13.56	34.29	40.66	11.49	3.77	5.65	58.16	1.04	19.89	10,771
Montana										
Carbon, Bear Creek	9.67	35.92	46.39	8.02	1.64	5.52	6.166	1.48	21.68	10,832
Cascade, Geyser	8.76	25.72	50.36	15.16	3.91	4.40	58.93	0.79	16.81	10,127
Custer, Miles	29.13	25.33	30.51	15.03	0.55	5.60	40.09	0.54	38.19	6,662
Fergus, Lewistown	15.35	28.27	48.08	8.30	4.53	5.42	61.15	0.71	19.89	10,615
Missoula, Missoula	24.70	29.33	26.11	19.86	0.85	5.56	39.04	0.74	33.95	6,727
Yellowstone, Musselshell	16.66	27.35	48.07	7.42	1.00	5.61	59.22	0.97	25.78	10,226
New Mexico										
Colfax, Raton	2.12	36.06	50.22	11.60	0.64	4.94	69.96	1.33	11.53	12,965
Lincoln, White Oaks	2.52	34.63	45.99	16.86	0.76	4.97	66.65	1.32	9.44	11,956
M'Kinley, Blackrock	14.69	34.93	41.56	8.82	0.79	5.82	60.93	1.12	22.52	10,809
North Dakota										
Morton, Leith	36.18	29.77	25.35	8.70	0.68	6.76	39.45	0.59	43.82	6,700
M'Lean, *Wilton	35.96	31.92	24.37	7.75	1.15	6.54	41.43	1.21	41.92	7,069
Stark, *Lehigh	35.38	29.59	25.68	9.35	1.55	6.61	40.23	0.54	41.72	6,923
Williams, *Williston	36.78	28.16	29.97	5.09	0.48	6.93	41.87	0.69	44.94	7,204
Ohio										
Belmont, *Bellaire	4.14	39.30	47.18	9.38	3.96	5.19	69.58	1.20	10.69	12,874
Guernsey, *Danford	6.65	33.94	48.86	10.55	3.13	5.30	67.38	1.20	12.44	12,179
Jackson, *Wellston	7.71	38.32	42.02	11.95	4.61	5.41	62.49	1.11	14.43	11,515
Jefferson, Amsterdam	3.50	37.98	51.08	7.44	3.09	5.43	73.39	1.46	9.19	13,286
Noble, Belle Valley	5.15	37.34	49.00	8.51	2.94	5.42	70.51	1.50	11.12	12,733
Perry, *Dixie	7.55	38.00	46.08	8.37	2.84	5.48	67.02	1.29	15.00	12,128
Oklahoma										
Coal, Lehigh	7.07	36.41	45.68	10.84	3.64	5.13	64.33	1.44	14.57	11,468
Haskell, McCurtain	2.70	21.07	69.88	6.35	0.77	4.46	81.33	1.67	5.42	14,098
Pittsburg, Carbon	2.09	27.59	50.25	20.07	5.73	4.46	63.66	1.33	4.75	11,695
Pittsburg, McAlester	3.58	32.11	59.04	5.27	0.56	5.31	77.11	1.62	10.13	13,615
Oregon										
Coos, Beaver Hill	16.10	31.10	39.63	13.17	0.81	5.53	51.07	1.19	28.23	9,081
Pennsylvania										
Allegheny, Bruceton	2.73	36.03	54.98	6.26	1.39	5.26	76.82	1.46	8.81	13,815
Allegheny, Oak Station	3.48	35.15	55.45	5.92	1.18	5.42	75.73	1.45	10.30	13,700
Allegheny, Scott Haven	2.60	32.67	59.41	5.32	0.77	5.39	78.16	1.45	8.91	14,085
Bedford, Hopewell	1.58	16.32	69.98	12.12	1.94	4.09	77.01	1.44	3.40	13,408
Cambria, Barnesboro	2.87	21.44	69.23	6.46	1.52	5.00	80.53	1.19	5.30	14,177
Cambria, Beaverdale	3.44	16.18	73.46	6.92	1.33	4.64	80.61	1.20	4.80	14,114
Cambria, Carrolltown Road	0.93	23.10	69.29	6.68	1.30	4.31	81.64	1.26	4.31	14,485
Cambria, Fallen Timber	3.34	24.06	62.75	9.85	1.80	4.96	76.78	1.25	5.36	13,618
Cambria, Hastings	2.89	23.67	66.34	7.10	1.37	5.02	79.49	1.30	5.72	14,107
Cambria, Johnstown	1.32	14.63	75.24	8.81	1.57	4.26	81.19	1.39	2.78	14,047

*Indicates samples from car deliveries; all others are mine samples.

Table 65. Composition and Heat Value of United States Coals—Cont.

County, Bed or Local Name	Proximate Analysis "As Received"				Ultimate Analysis "As Received"					Heat Value, B.t.u. per Lb. "As Received"
	Moisture	Volatile Matter	Fixed Carbon	Ash	Sulphur	Hydrogen	Carbon	Nitrogen	Oxygen	
Pennsylvania—Continued										
Cambria, Nanty Glo	2.84	19.78	70.89	6.49	1.85	4.87	80.83	1.32	4.64	14,285
Cambria, Portage	3.52	17.32	73.27	5.89	1.06	4.73	82.06	1.23	4.98	14,278
Cambria, St. Benedict	2.94	19.52	70.87	6.67	1.76	5.04	79.78	1.26	5.49	14,143
Cambria, Van Ormer	2.73	24.98	63.64	8.65	0.81	4.89	78.24	1.22	6.19	13,860
Cambria, Vintondale	3.63	18.63	71.20	6.54	1.98	4.90	80.59	1.23	4.76	14,119
Cambria, Windber	3.30	12.50	77.90	6.33	1.04	4.46	81.65	1.27	5.25	14,340
Center, Osceola Mills	2.08	21.46	69.87	6.59	1.99	4.92	80.58	1.29	4.63	14,274
Clarion, Blue Ball Station	1.90	22.00	66.30	9.80	1.95	4.66	78.05	1.14	4.40	13,760
Clearfield, Boardman	2.95	21.29	66.92	8.84	1.35	4.74	78.51	1.19	5.37	13,901
Clearfield, Philipsburg	0.90	21.59	68.49	9.02	1.99	4.57	79.49	1.31	3.62	14,060
Clearfield, Smoke Run	3.73	20.29	68.41	7.57	1.33	4.86	78.92	1.22	6.10	13,970
Fayette, Connellsville	3.24	27.13	62.52	7.11	0.95	5.24	78.00	1.23	7.47	13,919
Indiana, Clymer	2.06	24.46	66.09	7.39	2.19	5.08	79.39	1.19	4.76	14,170
Indiana, Glen Campbell	3.08	27.32	61.16	8.44	1.29	4.99	76.71	1.27	7.30	13,772
Jefferson, Sykesville	2.44	28.44	60.68	8.44	1.32	5.07	76.91	1.31	6.95	13,732
Lackawanna, Dunmore	3.43	6.79	78.25	11.53	0.46	2.52	78.85	0.77	5.87	12,782
Luzerne, Pittston	2.19	5.67	86.24	5.90	0.57	2.70	86.37	0.91	3.55	13,828
Schuylkill, Minersville	2.76	2.48	82.07	12.69	0.54	2.23	79.22	0.68	4.64	12,577
Schuylkill, Tower City	3.33	3.27	84.28	9.12	0.60	3.08	81.35	0.79	5.06	13,351
Somerset, Jerome	1.44	15.21	73.38	9.97	0.90	4.17	79.43	1.34	4.19	13,799
Somerset, MacDonaldton	1.03	16.03	72.57	10.37	2.22	4.29	79.17	1.24	2.71	13,700
Somerset, Windber	2.40	13.50	77.80	6.31	1.26	4.44	82.62	1.31	4.06	14,370
Sullivan, Lopez	3.16	8.59	78.08	10.17	0.67	3.47	79.49	1.10	5.10	13,376
Washington, Marianna	1.44	34.61	57.77	6.18	0.78	5.23	78.76	1.44	7.61	14,242
Westmoreland, Greensburg	2.14	30.02	58.81	9.03	1.17	5.03	76.33	1.56	6.88	13,662
Rhode Island										
Newport, Portsmouth	22.92	2.78	58.37	15.93	0.10	2.34	58.46	0.18	22.49	8,523
Providence, Cranston	4.54	3.01	78.69	13.76	0.87	0.46	82.39	0.12	1.75	11,624
South Dakota										
Perkins, Lodgepole	39.16	24.68	27.81	8.35	2.22	6.60	38.02	0.53	44.28	6,307
Tennessee										
Anderson, Briceville	1.70	35.02	53.14	10.14	1.06	4.97	75.32	1.80	6.71	13,462
Campbell, Lafollette	2.92	32.04	58.23	6.81	1.14	5.19	74.95	1.62	10.29	13,514
Rhea, Dayton	1.76	27.86	49.57	20.81	0.49	4.51	66.24	1.19	6.76	11,666
Texas										
Houston, Crockett	34.70	32.23	21.37	11.20	0.79	6.93	39.25	0.72	41.11	7,056
Wood, Hoyt	33.71	29.25	29.76	7.28	0.53	6.79	42.52	0.79	42.09	7,348
Utah										
Carbon, Sunnyside	5.96	38.68	48.77	6.59	1.73	5.43	71.28	1.52	13.45	12,841
Emery, Emery	3.93	40.92	49.22	5.93	0.39	5.52	73.02	1.25	13.89	12,965
Iron, Cedar City	10.35	36.33	43.70	9.62	5.82	5.13	61.24	0.95	17.24	10,374
Summit, Coalville	14.20	36.00	44.80	5.00	1.41	5.79	61.40	1.09	25.31	10,630
Virginia										
Henrico, Gayton	2.81	25.70	62.47	9.02	1.43	4.90	76.55	1.31	6.29	13,493
Lee, Darbyville	3.42	34.36	58.33	3.39	0.58	5.25	77.98	1.29	11.51	14,134
Russell, Dante	2.76	34.96	56.51	5.77	0.59	5.32	80.13	1.43	6.76	14,148
Tazewell, Pocahontas	3.50	15.50	76.80	4.20	0.73	4.77	83.36	1.08	5.86	14,630
Wise, Georgel	2.48	31.71	60.30	5.51	0.52	5.59	79.69	1.56	7.13	14,252
Washington										
King, Black Diamond	7.98	37.69	45.95	8.38	0.45	5.60	64.79	1.69	19.09	11,732
King, Cumberland	5.84	31.82	36.46	26.38	0.47	4.80	52.77	1.30	14.28	9,529
Kittitas, Roslyn	3.89	37.00	46.49	12.62	0.37	5.58	68.55	1.31	11.57	12,434
Pierce, Carbonado	3.81	26.60	49.33	20.26	0.39	5.01	63.85	1.93	8.56	11,518
Thurston, Centralia	25.08	32.25	34.02	8.65	0.82	6.37	47.26	.91	35.99	8,170
West Virginia										
Fayette, Carlisle	4.95	18.16	73.75	3.14	0.82	5.09	82.15	1.48	7.32	14,434
Fayette, Fayette	3.22	22.28	71.68	2.82	0.55	5.11	83.07	1.56	6.89	14,702
Fayette, Hawks Nest	5.00	24.50	67.20	3.30	0.55	5.12	80.06	1.38	9.59	14,280
Fayette, Kay Moor	3.17	25.11	68.81	2.91	0.52	5.09	82.59	1.63	7.26	14,584
Fayette, MacDonald	3.22	17.53	76.46	2.79	0.64	5.01	84.11	1.56	5.89	14,760

*Indicates samples from car deliveries; all others are mine samples.

Table 65. Composition and Heat Value of United States Coals—Cont.

County, Bed or Local Name	Proximate Analysis "As Received"				Ultimate Analysis "As Received"					Heat Value, B.t.u. per Lb. "As Received"
	Moisture	Volatile Matter	Fixed Carbon	Ash	Sulphur	Hydrogen	Carbon	Nitrogen	Oxygen	
West Virginia—Continued										
Fayette, Page	3.32	28.88	62.72	5.08	0.80	5.29	79.73	1.37	7.73	14,209
Fayette, Sun	2.94	19.69	68.67	8.70	1.86	4.70	77.66	1.45	5.63	13,786
Logan, Holden	1.66	32.89	59.94	5.51	0.93	5.16	78.97	1.26	8.17	14,126
M'Dowell, Ashland	2.80	14.50	77.40	5.33	0.64	4.56	83.39	1.03	5.05	14,550
M'Dowell, Big Four	2.30	16.98	76.21	4.51	0.66	4.36	85.00	1.20	4.27	14,636
M'Dowell, Coalwood	2.19	13.91	75.25	8.65	0.57	4.45	80.69	1.19	4.45	13,995
M'Dowell, Eckman	3.32	16.22	76.35	4.11	0.55	4.67	83.05	1.16	6.46	14,587
M'Dowell, Ennis	3.25	14.46	78.05	4.24	0.48	4.65	84.05	1.12	5.46	14,571
M'Dowell, Powhatan	2.55	13.44	78.57	5.44	0.57	4.58	83.60	1.01	4.80	14,569
M'Dowell, Roderfield	2.32	16.76	69.80	11.12	1.78	4.35	77.46	1.27	4.02	13,514
M'Dowell, Worth	3.00	13.00	78.80	5.23	0.48	4.46	82.84	1.05	5.94	14,500
Marion, Monongah	2.95	35.01	56.44	5.60	0.67	5.33	77.89	1.38	9.13	13,862
Mercer, Coaldale	3.43	14.58	77.89	4.10	0.67	4.79	83.79	1.06	5.59	14,602
Mercer, Wenonah	3.58	13.17	79.10	4.15	0.56	4.90	83.59	1.07	5.73	14,598
Monongalia, Richard	1.63	28.42	62.01	7.94	0.96	5.00	78.24	1.28	6.58	13,937
Preston, Masontown	1.40	26.40	62.92	9.28	1.50	4.83	77.92	1.43	5.04	13,808
Raleigh, Sophia	3.30	14.00	77.60	5.14	0.63	4.60	82.94	1.41	5.28	14,490
Raleigh, Stonewall	3.02	16.06	78.75	2.17	0.80	5.02	85.02	1.40	5.59	15,001
Tucker, Thomas	1.12	20.74	70.38	7.76	1.05	4.52	81.22	1.59	3.86	13,800
Wyoming										
Bighorn, Cody	17.29	31.33	45.89	5.49	0.35	5.64	59.15	0.85	28.52	10,055
Carbon, Hanna	11.45	42.58	39.33	6.64	0.38	5.27	59.66	0.94	27.11	10,890
Fremont, Hudson	21.27	32.83	42.75	3.15	0.39	6.13	55.91	0.75	33.17	9,779
Hot Springs, Kirby	15.86	33.01	47.39	3.74	0.59	6.06	62.03	1.29	26.29	10,984
Sweetwater, Superior	16.02	33.63	47.60	2.75	0.94	6.11	62.29	1.08	26.83	10,849
Sheridan, Monarch	23.88	34.33	38.44	3.35	0.38	6.29	54.07	1.14	34.77	9,335

*Indicates samples from car deliveries; all others are mine samples.

Table 66. Commercial Sizes of Anthracite Coal.

Sizes	Prepared with square-mesh screens		Prepared with round-mesh screens	
	Through mesh opening, inches	Over mesh opening, inches	Through mesh diameter, inches	Over mesh diameter, inches
Broken (furnace)	4	2¾	4½	3¼
Egg	2¾	2	3¼	2¼
Stove	2	1⅜	2¼	1½
Nut (chestnut)	1⅜	¾	1½	⅞
Pea	¾	½	⅞	9/16
Buckwheat No. 1	½	¼	9/16	5/16
Buckwheat No. 2 (rice)	¼	⅛	5/16	3/16
Buckwheat No. 3 (barley)	.....	.....	3/16	1/16

In some instances a No. 4 Buckwheat has been marketed; and some mines supply "Birdseye" which is practically a mixture of Nos. 2 and 3 Buckwheats, or "through 5/16 and over 1/16."

Hotel Claridge, New York City, equipped with Heine Boilers.

For the sizing of bituminous coals the *American Society of Mechanical Engineers* has recommended the following:

EASTERN BITUMINOUS

Lump coal must pass over a 1¼-in. mesh bar screen.

Nut coal must pass through a 1¼-in. mesh, and over a ¾-in. screen.

Slack coal must pass through a ¾-in. bar screen.

WESTERN BITUMINOUS

Lump coal comes in 6-in., 3-in. and 1¼-in. sizes, and the respective lumps must pass over circular openings of corresponding size. Where the lump coal is sized as 6 by 3 in. and 3 by 1¼ in., the coal must pass through the larger opening and over the smaller.

Steam nut of 3-in. size must pass through a 3-in. circular opening and over a 1¼-in. mesh. Nut of 1¼-in. size must pass through a 1¼-in. and over a ¾-in. opening, and ¾-in. coal must pass through a ¾-in. mesh and over a ⅝-in. opening.

Coal screenings must pass through a 1¼-in. round mesh.

In the coal fields "run-of-mine" is the name given to the unscreened coal taken from the mine, and "culm" is the residue from screenings, including "silt" and other anthracite dust.

Sampling Coal

SAMPLES taken at the mine, says *G. S. Pope,* are generally of higher grade than those obtained from the average commercial shipments. The former contain a lower percentage of ash and have a higher heat value. Persons without experience generally select a sample better than the average run of the coal delivered. However, an experienced collector, by using good judgment, can obtain samples so fairly representative that the results of the analyses are reasonably accurate.

The value of laboratory analysis has been questioned largely because of ignorance or carelessness in taking the samples. The laboratory test makes use of one gram—about $^1/_{28}$ of an ounce—of coal. The particles of coal in this sample should have been a considerable and equal distance apart in the original bulk shipment. A representative sample can be obtained only by repeated and systematic crushing, dividing and discarding—such as is described below.

The sample should contain about the same proportions of fine and coarse coal as well as foreign matter, such as slate and bone, in order to show the quality of the coal delivered as a whole. To this end portions of coal are selected from all parts of the wagon, car, or ship, then mixed and systematically reduced to the quantity required for analysis. The original or gross sample should weigh 500 lb. or more, preferably 1000 to 2000 pounds. The *Bureau of Mines* has established a 1000-lb. sample as sufficient to give reliable results for coal comparatively free from impurities. For other coals a larger sample is required. Increasing the size of the gross sample tends toward accuracy, but the possible increase is limited by the cost of collection and reduction. A separate sample should be taken from each 500 tons or less of coal delivered. The gross sample is usually reduced to quantities varying between 2 to 5 lb. and then sent to the laboratory.

Representative samples can best be taken during the time when the coal is being loaded or unloaded. Portions of 10 to 30 lb., depending upon the size and weight of the largest pieces of coal, should be systematically taken with a shovel or a specially designed tool. The mechanical method is preferred to shovel sampling, as it eliminates the personal equation. Care should be exercised to secure equal amounts of coal from near the top, the middle and bottom of the load. Clean boxes, buckets or ash cans may

be used for holding the portions of coal that make up the gross sample. The receptacles should have tight-fitting lids which can be locked, to prevent gain or loss in moisture and to preserve the integrity of the sample.

The next step is to prepare the 1000 lb. gross sample for shipment to the laboratory. Three operations are involved: crushing, mixing and reduction in quantity. These can be done by mechanical means, using a so-called sample grinder, or else by the hand method described by the *Bureau of Mines*, which involves six stages, Fig. 205, to obtain the final 5 lb. sample.

In this procedure the coal must be broken down to the sizes given in Table 67, before division into equal parts. The lumps can be crushed with a tamper, maul or sledge, on a hard, clean, dry floor free from cracks. Other tools required are a shovel, broom and rake; also a blanket measuring about 6 by 8 ft. The coal is raked while being crushed, so that all lumps will be broken. The floor or blanket is swept clean of discarded coal after each sample has been divided into equal parts. The space where this is done should be protected from rain, snow, wind and direct sunlight.

The alternate-shovel method of reducing the gross sample, as shown in the first and second stages in Fig. 205, is repeated until the sample is reduced

Table 67. Largest Sizes of Coal Allowable in Samples.

Stage of Preparation	Weight of Sample, Lb.	Size of Coal, Inches
1	1,000	1
2	500	3/4
3	250	1/2
4	125	3/8
5	60	1/4
6	30	3/16

to about 250 pounds. Before each reduction in quantity the sample should be crushed to the fineness prescribed in Table 67.

The crushed coal is shoveled into a conical pile as in diagrams 2 and 7, by depositing each shovelful of coal on top of the preceding one, and then formed into a long pile as follows:

The sampler takes a shovelful of coal from the conical pile and spreads it out in a straight line as in diagrams 3 at A and 8 at A, the width being that of the shovel and the length from 5 to 10 feet. His next shovelful is spread directly over the top of the first shovelful, but in the opposite direction, and so on back and forth, the pile being occasionally flattened until all the coal has been formed into one long pile, as shown in diagrams 3 and 8 at B.

The sampler then discards half of his pile, and beginning at one side of the pile, at either end, and shoveling from the bottom of the pile, takes one shovelful (No. 1, in diagrams 4 and 9) and sets it aside; advancing along the side of the pile a distance equal to the width of the shovel, he takes a second shovelful (No. 2) and discards it; again advancing in the same direction one shovel width, he takes a third shovelful (No. 3), and adds it ,to the first. Shovelful No. 4 is taken in a like manner and discarded, the fifth shovelful (No. 5) is retained, and so on, the sampler advancing always in the same direction around the pile, so that its size will be reduced uniformly. When the pile is removed, about half the original

coal should be contained in the new pile formed by the alternate shovelfuls which have been retained. The retained halves are shown at A and the rejected halves are shown at B, in diagrams 5 and 10, Fig. 205.

After the gross sample has been decreased by the above method to about 250 lb., the quantity is further reduced by the quartering method. Before each quartering, the sample should be crushed to the fineness described in Table 67.

Quantities of 125 to 250 lb. should be thoroughly mixed by coning and reconing, as in diagrams 12 and 13; quantities less than 125 lb. should be placed on a cloth or blanket, measuring about 6 by 8 ft.; mixed by raising first one end of the cloth and then the other, as in diagrams 18, 24 and 30, so as to roll the coal back and forth; and after being thoroughly mixed, formed into a conical pile by gathering the four corners of the cloth, as in diagrams 19, 25 and 31.

The conical pile is quartered by flattening the cone, its apex being pressed vertically down with a shovel or board. The flattened mass, which must be of uniform thickness and diameter, is then marked into quarters, as in diagrams 14, 20, 26 and 32, by two lines that intersect at right angles directly under a point corresponding to the apex of the original cone. The diagonally

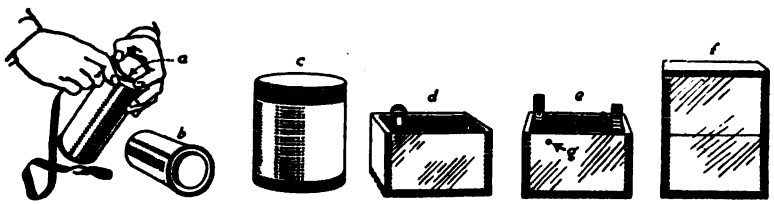

Fig. 206. Bureau of Mines Coal Sample Containers.

opposite quarters, B in diagrams 16, 22, 28 and 34, are shoveled away and discarded and the space that they occupied brushed clean. The coal remaining is successively crushed, mixed, coned and quartered until two opposite quarters equal approximately 10 lb. of $^{3}/_{16}$-inch size. This 10-lb. quantity is divided into two equal parts. Each part is immediately sealed into a container for transportation. One of the samples is forwarded for analysis to the laboratory and the other held in reserve, should the sample forwarded be lost or damaged in transit.

One or more containers can be used for this purpose, depending upon the quantity they will hold. Glass jars or metal cans of one or two-quart size are ordinarily employed.

The *Bureau of Mines* has developed two sample holders, Fig. 206, one a galvanized iron can and the other a double container consisting of a wooden shipping box and an inclosed pressed-paper case. The metal can is 11 in. long and 3⅛ in. diameter, inside dimensions, with a screw cap 2 in. diameter. The capacity is 2½ to 3 lb. of coal, so that two cans are used for the laboratory sample. Before filling, each can should be carefully inspected as to tightness and freedom from rust. The coal should then be carefully packed in, so as to occupy as much of the space as possible and exclude the air. This can be accomplished by shaking or jarring the container repeatedly and vigorously while filling it. The screw cap is then closed against a rubber washer. To insure tightness, the cap when screwed down in place is wrapped carefully with electrician's rubber or adhesive tape, the first layer of which completely covers the joint, as at *a* in Fig. 206. At *b* the can is shown properly sealed and ready to be wrapped for mailing. Solder, paraffin or sealing wax should not be used, because some of it may become mixed with the coal, either when it is applied or when the cap is removed.

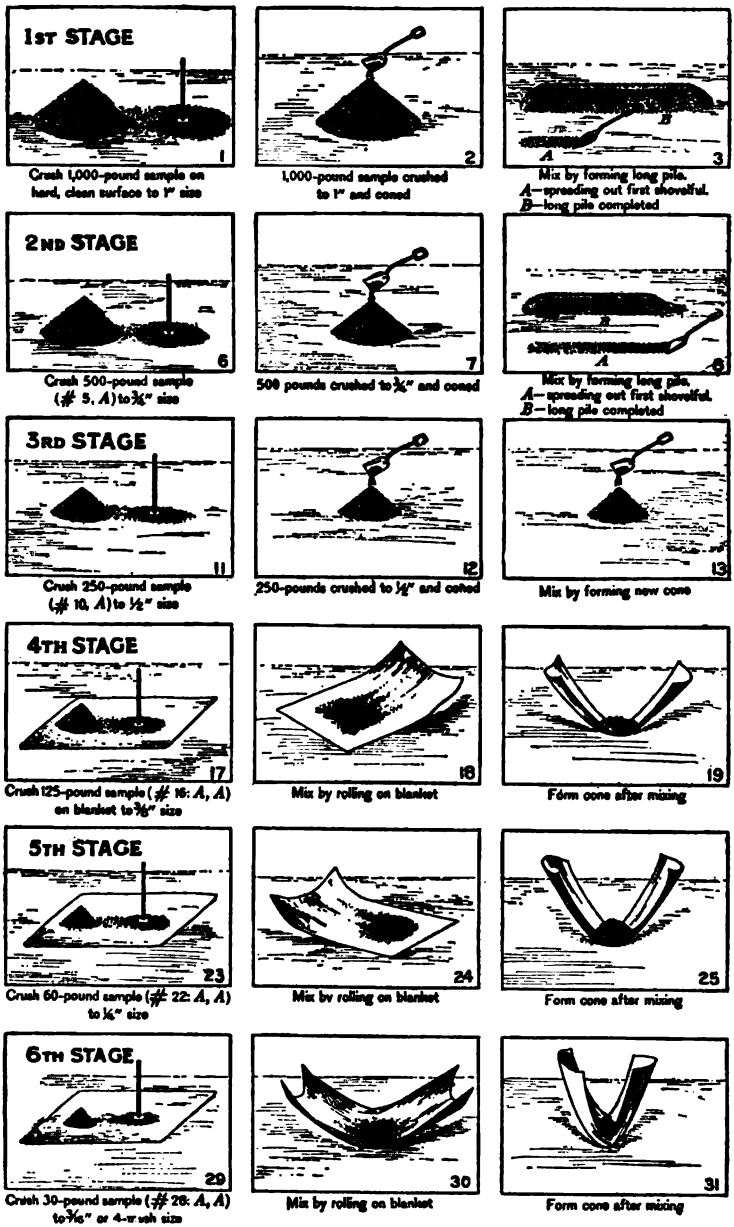

Fig. 205. Preparation of Coal Sample by Hand.

(Read straight across both pages.)

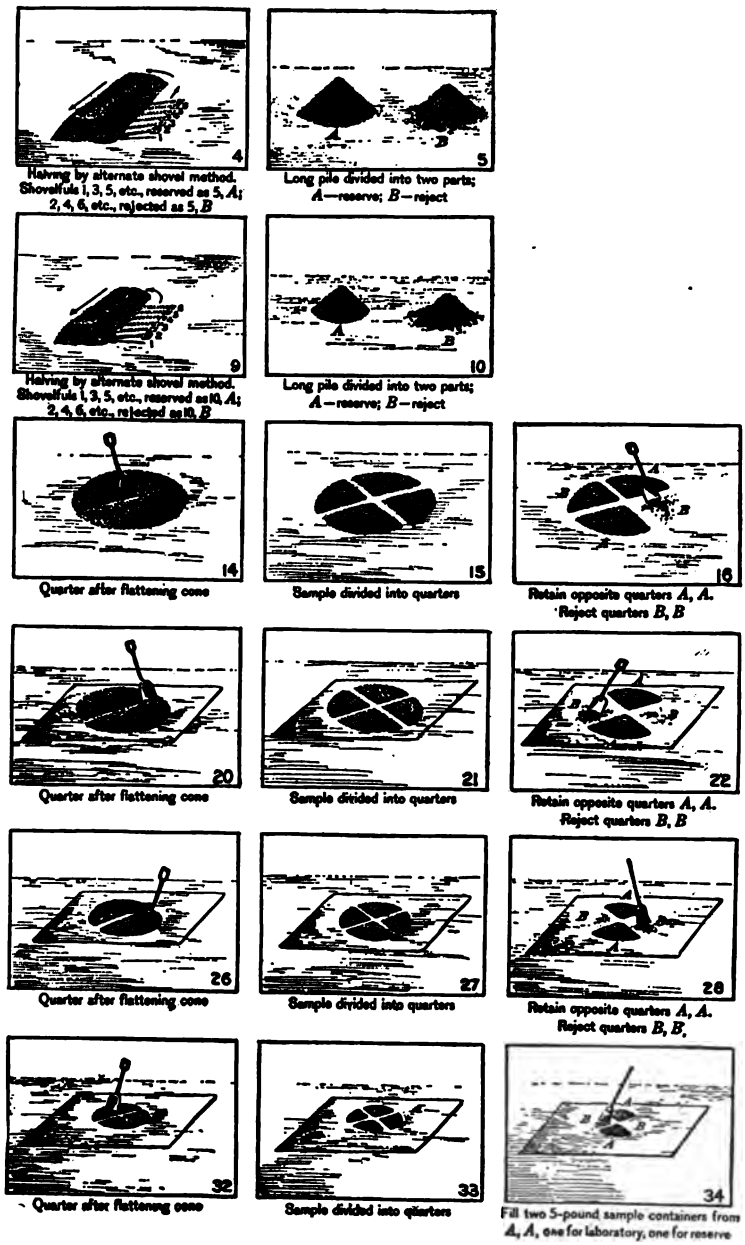

Fig. 205. Preparation of Coal Sample by Hand.

(*Read straight across both pages.*)

In the double container shown at the right, Fig. 206, *c* is the pressed paper case, *d* and *e* sections of the wooden box, and *f* the assembled container. The paper case, 5⅞ in. diameter and 7 in. long, has a capacity of 5 to 7 lb. of coal. The shipping box is made of well-seasoned basswood with lock-jointed corners, fully reinforced. Two suit-case catches are placed near opposite corners, inside the box, to operate in either of the two possible ways of assembly. Small holes are drilled through opposite sides of the box, as at *g*, and through a small part of the catch lug. By releasing the catches with a nail inserted in the two holes, the box is easily opened. In using this container, the sample of coal is placed in the paper case and the edge of the cap is sealed tight with adhesive tape.

With each container sent to the laboratory for analysis, there should be a ticket bearing the name and address of the plant, the date, the kind and size of coal, the number of tons represented by the sample, and other similar information. This form, properly filled in, can be placed inside the container or preferably around the container on the outside, before wrapping for mailing. A copy should be retained for reference or checking.

Fuel Analysis

THE term moisture, as used in fuel analyses, represents the loss in weight of a coal sample when dried for a given time at a given temperature. This is taken as the total moisture in the coal received at the laboratory.

Volatile matter is the gaseous combustible matter of the coal and represents the hydrocarbons and other gaseous compounds which distill off on application of heat, as well as some incombustible gases.

Fixed carbon is the solid combustible matter represented by the uncombined carbon in the coal or the carbon remaining after distillation. It is not pure carbon nor is it the total carbon in the coal, for a part of the carbon is expelled as volatile matter.

Ash is the incombustible remaining after the moisture and volatile matter have been driven from the coal and the fixed carbon burned; it is the residue left from complete combustion of the coal.

These four items are set forth in the proximate analysis, which may show them in either of three different ways. The whole four items may be given in one statement, as in the second column of Table 68, known as "as received." The moisture may be stated separately or ignored, and the other three items given as in the third column; and this is known as "moisture free" or "dry coal." The ash also may be stated separately, and the other two items given as in the fourth column, known as "combustible" or "moisture and ash free."

Table 68. Proximate Coal Analysis Statements.

Constituent	As received, Per cent	Moisture-free, Per cent	Moisture and ash-free, Per cent
Moisture	10	.....	.....
Volatile matter	30	33.33	37.50
Fixed Carbon	50	55.56	62.50
Ash	10	11.11	.....
Total	100	100.00	100.00

The following instructions for the proximate and ultimate analyses of coal, and for the analyses of liquid fuels are taken from the 1915 Code of the American Society of Mechanical Engineers.

Proximate Analysis of Coal. The apparatus required for proximate analysis consists of a mill for grinding coal, chemical scales sensitive to $^1/_{1000}$ of the amount weighed, drying apparatus, a platinum crucible, a Bunsen burner and blast lamp, a supply of oxygen gas, and such chemicals and chemical apparatus as may be required. The elements to be determined are moisture, volatile matter, fixed carbon, ash and sulphur.

Determine the loss from air-drying and the total moisture in the ash as received, as explained elsewhere.

To determine volatile matter, place about one gram of the air-dried powdered coal in the crucible and heat in a drying oven to 220° F. for one hour (or longer if necessary to obtain minimum weight), cool in a desiccator and weigh. Cover the crucible with a loose platinum plate. Heat 7 minutes with a Bunsen burner giving a 6 to 8 in. flame, the crucible being supported 3 in. above the top of the burner tube and protected from outside air currents by a cylindrical asbestos chimney 3 in. diameter. Cool in a desiccator, remove the cover, and weigh. The loss in weight represents the volatile matter.

In the *U. S. Bureau of Mines* practice a 1-gram sample of fine (60-mesh) air-dried coal is heated to a temperature of 1750° F. in a platinum crucible with a close-fitting cover for seven minutes over a No. 3 Meker burner giving a flame 16 to 18 cm. high. The crucible is placed so that its bottom is 2 cm. above the top of the burner. To protect the crucible from the effects of drafts it is surrounded by a sheet iron chimney of special design. The loss in weight minus the weight of moisture determined at 220° F. represents the volatile matter.

To ascertain the ash, expose the residue in the crucible to the blast lamp until it is completely burned, using a stream of oxygen if desired to hasten the process. The residue left is the ash.

The *Bureau of Mines* determines the ash in the residue from the moisture determination. The moisture is determined by heating 1 gram of the 60-mesh air-dried coal in a porcelain crucible for one hour at 220° F. in a constant temperature heating-oven. To determine the ash, the crucible is heated slowly in a muffle furnace until the volatile matter is driven off. Ignition in the muffle is continued at a temperature of 1380° F., with occasional stirring of the ash until all the particles of carbon have disappeared. The crucible is cooled in a desiccator, weighed, heated again for half an hour, and weighed again. The process is repeated until the variation in weight between two successive ignitions is 0.0005 gram or less.

The difference between the residue left after the expulsion of the volatile matter and the ash is the fixed carbon.

To determine sulphur by Eschka's method, which is the one commonly used, a sample of 60-mesh coal weighing 1.3736 grams is mixed in a 30 cc. platinum crucible with about 2 grams of Eschka mixture (2 parts light calcined magnesium oxide, 1 part anhydrous sodium carbonate) and about 1 gram of the Eschka mixture is spread over it as a cover. The mixture is carefully burned out over a gradually increasing alcohol or natural gas flame. When all black particles are burned out the crucible is cooled, the contents digested with hot water, filtered, washed, and the solution treated with saturated bromine water and hydrochloric acid, boiled, and the sulphur precipitated as barium sulphate by adding a solution of barium chloride.

Ultimate Analysis of Coal. The apparatus required for ultimate analysis consists of a mill and other apparatus for grinding and pulverizing the coal; chemical scales sensitive to $^1/_{1000}$ of the amount weighed; drying apparatus; combustion apparatus, embracing a combustion furnace, a glass combustion tube one end of which is filled with copper oxide and chromate of lead and the other end with a roll of oxidized copper gauze, a porcelain boat, a set of

The Adams Bag Co., Chagrin Falls, Ohio, equipped with Heine Boilers.

bulbs containing hydrate of potassium, a U-tube filled with chloride of calcium, and a supply of pure oxygen and pure air; together with suitable chemicals and chemical apparatus required for the various processes. The elements to be determined are moisture, carbon, hydrogen, oxygen, sulphur, nitrogen, and ash.

The moisture is determined in the manner as pointed out above.

The carbon and hydrogen are obtained by the use of the combustion apparatus. One-half gram of the pulverized oven-dried coal is placed in the porcelain boat, which is introduced between the copper roll and the copper oxide within the combustion tube. After the contents within have been thoroughly dried out by a sufficient preliminary heating aided by a current of dry air, the furnace is set to work and the coal burned by first passing air through the tube and finally oxygen, conducting the products of combustion through the potash bulbs and the chloride of calcium tube. The carbon dioxide produced by the combustion of the carbon is absorbed by the potash, and the water formed by the combustion of hydrogen is taken up by the chloride of calcium. The quantity of carbon is determined by weighing the bulbs before and after, thereby obtaining the weight of the carbon dioxide produced, and then calculating the weight of carbon from the known composition of the dioxide. Likewise, the quantity of hydrogen is determined by weighing the calcium tube before and after, which gives the amount of water produced, and, dividing by 9, the amount of hydrogen.

Sulphur is found by the method described above under the heading Proximate Analysis.

To determine nitrogen, a certain weight of coal is mixed with strong sulphuric acid and permanganate of potash and heated until nearly colorless. This process converts the nitrogen into ammonia and then into sulphate of ammonia, and the amount of sulphate is determined by making the solution alkaline and then distilling it. The nitrogen is found by calculation from the known composition of ammonia.

The ash is found by weighing the refuse left in the combustion boat after the coal is completely burned.

The oxygen is the difference between the sum of the elements previously determined and the original weight of coal.

The ultimate analysis of coal, as will be seen from the above description, requires the use of so much chemical apparatus, and at best it is so complicated that it is not likely to be done except in a fully equipped chemical laboratory. It should not be undertaken by one who is not entirely familiar with all the details of the work.

Analysis of Liquid Fuels. The determination of carbon and hydrogen in liquid fuels is made in the same manner as that concerning the solid fuels above described, using special means for preventing loss in the various processes on account of the volatile characteristics of the fuel.

To determine the sulphur, the oil or other liquid is heated with nitric acid and barium chloride. The quantity of sulphate of barium thus produced is ascertained by filtering and weighing, and the sulphur calculated from the known composition of the compound.

The ultimate analysis of liquid fuel, like that of coal, should be undertaken only by a person familiar with all the necessary details.

Heat Value of Coal

THE heat value of coal is represented by the heat units liberated by perfect combustion and is usually expressed in British thermal units per pound of fuel. This value can be approximated from either the proximate or ultimate analysis.

From its proximate analysis the B.t.u. value of one pound of coal is given by *Lucke* as:

$$\text{B.t.u.} = 14{,}544\, c + 27{,}000\, v \left(1 - \frac{1}{\frac{c}{v} + 0.5} \right) \qquad (57)$$

in which c and v are the fractional weights of fixed carbon and volatile, respectively, in the coal.

From its ultimate analysis the B.t.u. value of coal can be approximated by the *Dulong* formula:

$$\text{B.t.u.} = 14{,}544\, C + 62{,}028 \left(H - \frac{O}{8} \right) + 4050\, S \qquad (58)$$

in which C is carbon, H is hydrogen, O is oxygen and S is sulphur, expressed as the fractional part of one pound of coal.

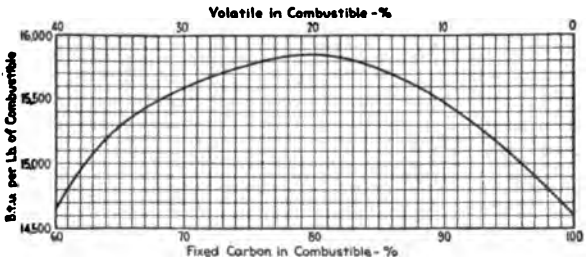

Fig. 207. Heat Value of Coal by Proximate Analysis.

Based on the proximate analysis of samples of coals, *Wm. Kent* has established a relation between the heat value and the fixed carbon as well as the volatile matter in the combustible, as shown in Fig. 207. The figures give a useful approximation and are correct within the indicated limits.

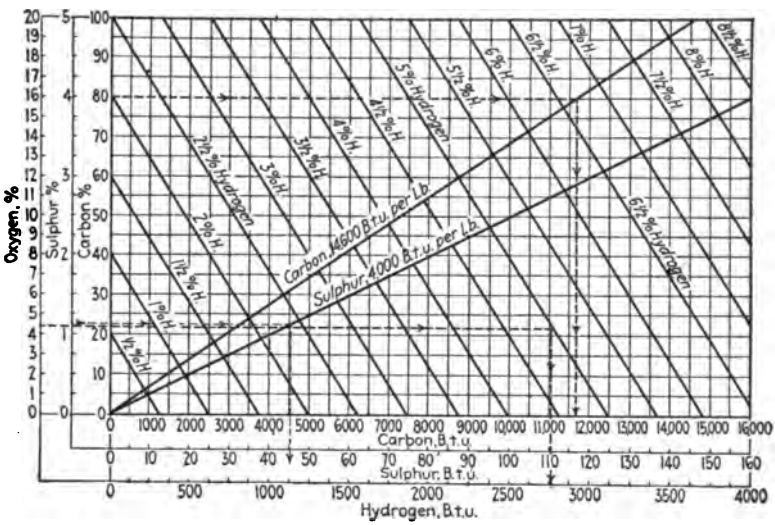

Fig. 208. Heat Value of Coal by Ultimate Analysis.

A graphical method of determining the heat value of coal, developed by *W. C. Stripe*, is shown in Fig. 208. The diagram is based on the ultimate analysis and corresponds with the formula by *Dulong*, given above. Knowing the constituents of the coal from the ultimate analysis, connect the values on the left-hand scale with the diagonals as shown by the dotted lines, and read the results on the lower scales. The sum of the three determined values will give the total approximate heat value of the coal.

Fig. 208 is for a coal containing 79.9 per cent carbon; 4.98 per cent hydrogen; 4.31 per cent oxygen; 1.85 per cent nitrogen; 1.13 per cent sulphur; 7.83 per cent ash and 2.91 per cent moisture. The dotted-arrow lines show that the carbon represents 11,660 B.t.u.; the hydrogen, for the oxygen content given, represents 2,750 B.t.u.; and the sulphur represents 45 B.t.u. Adding these values gives 14,455 B.t.u. as the approximate heat value of the coal.

A more direct and accurate method of determining the heat value of coal is by a fuel calorimeter of the "bomb" type. A sample of the coal is burned in the bomb or combustion chamber, which is immersed in water. The heat of combustion, transmitted to the water, raises its temperature and from this rise the heat value of the coal is calculated.

Mahler Coal Calorimeter

THE Mahler coal calorimeter consists essentially of a strong cylindrical vessel having a capacity of about 800 cc., which is closed at the top and filled with oxygen gas, under a pressure of 300 lb. per sq. in. A sample of finely powdered coal which will pass through a 100-mesh sieve, weighing about 1 gram, is placed in a pan suspended within the interior vessel provided with two electrodes through which an electric current from a battery can be passed. The whole is immersed in an outer vessel containing about

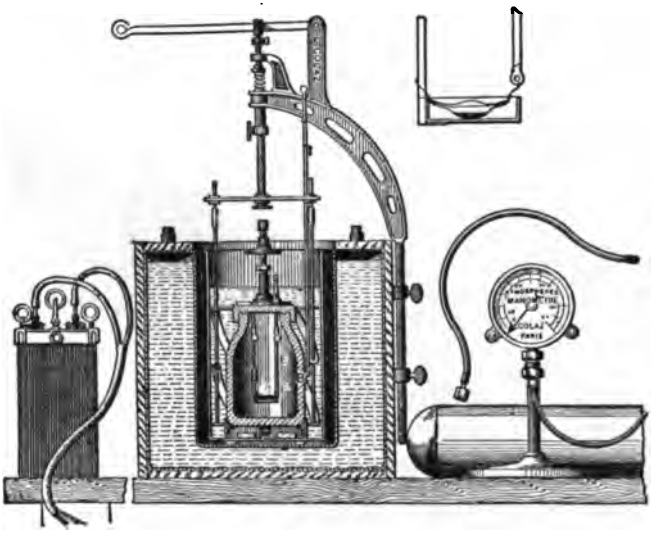

Fig. 209. Mahler Bomb Calorimeter.

2500 grams of water, thoroughly stirred, the temperature of the water observed, the coal set on fire by completing the electric circuit, the water again stirred, and the temperature observed at intervals of half a minute

Five 366 H. P. Heine Standard Boilers installed in the Cook County Court House, Chicago, Ill.

until the thermometer ceases to rise. The difference between the initial and final temperatures thus determined is corrected for radiation, the latter being found by observing the rate at which the temperature changes before and after the coal is fired.

The weight of water contained in the outer vessel is added to the water equivalent of the apparatus, and the sum of the two is multiplied by the corrected rise of temperature expressed in deg. cent. The heat generated in burning the fuse wire, the heat due to the formation of aqueous nitric acid, and that due to the combustion of sulphur to sulphuric acid, are subtracted from this product. The remainder, divided by the weight of fuel expressed in grams, is the heat of combustion expressed in gram-calories per gram. This result is multiplied by 1.8 to convert to heat of combustion expressed in B.t.u. per lb.

The correction for iron fuse wire is 1.6 calories per milligram. The correction for nitric acid, which is obtained by titrating the washings with standard ammonia solution (0.00587 grams of NH_3 per cc.) is 5 gram-calories per cc. of the ammonia solution. The correction for sulphur, which is obtained by precipitation as barium sulphate is 13 gram-calories per 0.01 gram of sulphur.

The sample used for the calorimeter test should be powdered and air-dried at the temperature of the room. A duplicate sample should be taken for the determination of the moisture in this air-dried coal by heating in a drying oven to 220° F. for one hour (or longer if necessary to obtain minimum weight), cooling in a desiccator and weighing. The results obtained on the calorimeter test should be corrected for the moisture thus found and reported as being referred to dry coal.

Ash

ASH is a mechanical mixture of silicates, oxides and sulphates. The composition of ash in different coals is given in Table 69, due to *J. S. Cosgrove*. The amount of ash in coals varies with the locality of the mine, and for coal from the same district, with mining conditions. Depending on the kind and size of coal, the ash content is from 3 to 25 per cent. The nominal amount of ash is that contained in the face sample of coal taken from the seam proper; this amount is usually increased by ash added from the roof or bottom in the course of mining.

Table 69. Composition of Constituents in Percentage of Total Ash.

Constituent	Anthracite	Semi-Bituminous	Bituminous		Bituminous Slack	Lignite
			(a)	(b)		
Sulphur Oxide (SO_3)	0.17	1.00	0.10	26.90	0.40	12.50
Silica (SiO_2)	25.66	54.80	47.30	15.20	53.20	39.30
Calcium Oxide (Lime) (CaO)	1.56	1.40	1.20	18.10	1.00	14.90
Alumina (Al_2O_3)	27.03	29.20	34.60	8.60	26.00	24.08
Iron Oxide (Fe_2O_3)	42.83	6.80	9.80	13.30	15.80	3.80
Magnesium Oxide (MgO)	11.83	0.60	0.40	10.00	0.70	1.70
Potassium Oxide (K_2O)	.....	2.10	2.50	1.80	1.60	0.40
Sodium Oxide (Na_2O)	.....	1.90	2.10	5.30	0.30	0.10
Total Ash, per cent	7.26	7.50	17.40	8.20	11.40	16.60

Run of mine and prepared sizes of coal made over a 1¼-in. screen can be improved by removing the excess ash by hand. Impurities amounting to 1.2 per cent have been taken out in this manner. It is advisable, therefore, to wash, screen or hand-pick the impurities before shipping the coal. According to *L. J. Joffray*, the washing of coal at the mine will reduce the excess ash in screenings, so that the heat value approaches that of lump bituminous, as shown by these figures:

	Ash per cent.	B.t.u. per lb.
Dry or unwashed screenings	22.61	8,895
Washed screenings	14.05	10,085
Lump	12.39	10,499

These are actual values and refer to coal taken from one mine in the Central West.

The relation between *ash content and heat value* can be established for any particular coal. Fig. 210 has been determined by *M. B. Smith* on a basis of 1800 samples of Hocking Valley slack coal. The samples came from 20 different mines and were tested over a long period. It is stated that the figures in the diagram agree, within 10 to 50 B.t.u., with actual calorimeter tests. The average proximate analysis of this coal is:

Fixed carbon, per cent	52.60
Volatile, per cent	34.20
Ash, per cent	13 20
Sulphur, per cent	1.80
Heat value, B.t.u. per lb.	12,300
Moisture as received, per cent	9.85

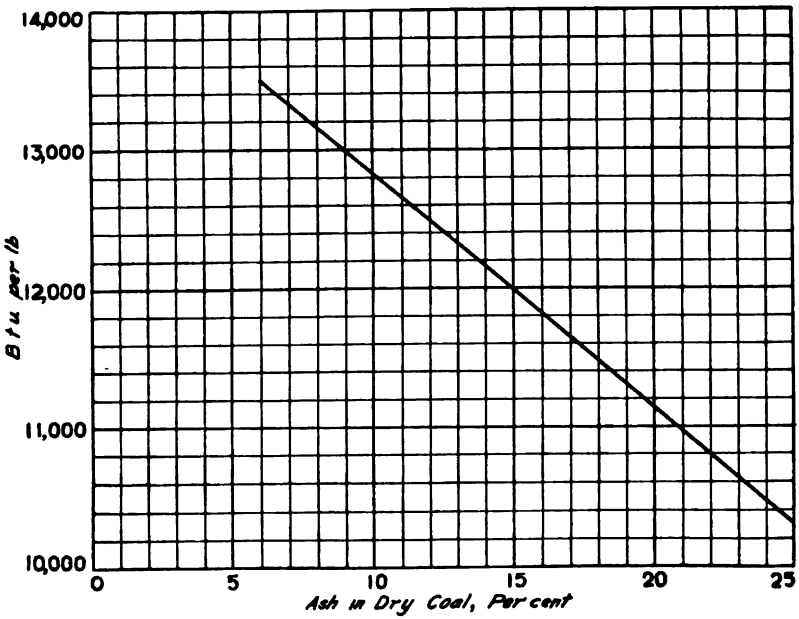

Fig. 210. Relation between Heat and Ash Content.

The *evaporation* is related to ash content as shown in Fig. 211, due to *W. N. Polakov.* With an increase of ash the evaporation falls, rapidly at first and more slowly when the percentage is high. Large excess of air and additional losses due to frequent cleaning accompany the use of coal of high ash content.

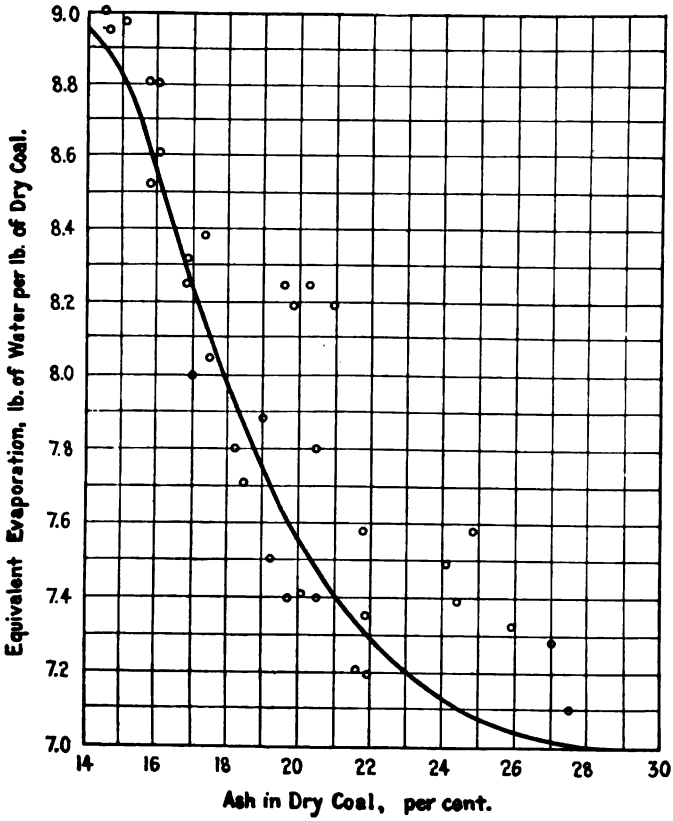

Fig. 211. Relation between Evaporation and Ash Content of Coal.

Clinker

CLINKER is formed by the mechanical adhesion of the particles of ash, or by the fusion of the ash to form slag. Some of the constituents of ash act as alloys and form a fused mass of clinker known as "running ashes." Clinker can be classified as "hard" and "soft" by these characteristics:

Hard clinker is the result of the direct melting of the ash or some of its components. When due to the fusing of the ash, the clinker will form a large, hard cake. When due to the melting of some of the ash constituents the clinker will be distributed throughout the ash in the form of small

1000 H. P. Heine Boiler installation in the Robey Street Terminal of the Baltimore & Ohio Railroad Co., Chicago, Ill.

hard chunks. Hard clinker hardens while in the ash on the grates. It is usually the direct result of bad firing methods.

Soft clinker is not directly chargeable to poor firing, but poor firing may start the formation and hasten the spread of clinker. Soft clinker is caused by the slagging of the ash, that is, the silica of the ash combines with the base having the lowest fusing temperature. After having formed, the clinker continues to grow until the whole grate is covered. In appearance it is not unlike hard clinker, having a crust on top although fluid beneath the surface. Soft clinker varies in consistency from a thick paste to a heavy oil; the more fluid it is, the faster it spreads, remaining molten while on the grate but hardening when the temperature is lowered.

Fusion of Ash. For the constituents of ash, the fusing temperatures (in degrees Fahrenheit) are as follows:

Sulphur (S)	239	Alumina (Al_2O_3)	3416
Silica (SiO_2)	3227	Calcium oxide (CaO)	3452
Iron (Fe)	2840	Magnesium oxide (MgO)	3882

All the fusing temperatures (except sulphur) are higher than those found in a boiler furnace.

The effect of clinker is shown in Fig. 212, due to *J. P. Sparrow.* The tests were made on boilers equipped with standard stokers. The efficiency remained constant up to 2335 degrees. Above this the efficiency increased rapidly with a small rise in temperature, but beyond 2475 deg., the efficiency remained constant up to 2900 degrees. The critical point of ash-fusion is between 2400 and 2500 degrees. If the ash-fusion temperatures are below 2400 deg., the coals are classed as clinkering, and if above 2500 deg., as non-clinkering. The standard ash-fusion temperature is taken as 2450 deg., with a variation of 50 deg. plus or minus.

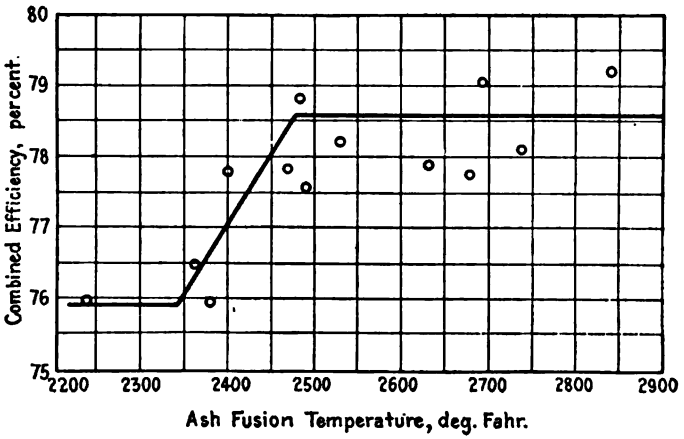

Fig. 212. Effect of Clinker on Efficiency.

The clinkering behavior of coal is indicated in Table 70, due to *L. J. Joffray,* which gives results from burning tests. The coals with non-clinkering ash listed in the table were low in sulphur and in lime, and did not clinker at 2900 deg. in a dazzling white fire. The ash in the clinkering coals fused at a temperature of 2200 deg., because the sulphur and lime content were

high in proportion to the silica, alumina, and the iron oxide. Sulphur content alone does not indicate that the coal may clinker, although with normal ash content and 4 per cent or more sulphur, the coals listed have such a tendency.

Table 70. Ash Behavior of Coal from Illinois and Indiana Mines.

Test No.	Ash in Dry Coal, per cent.	Sulphur, per cent.	Heat Value, B.t.u. per Lb.	Clinker	Color of Ash
1	9.63	0.64	12,325	No	White
2	10.30	1.30	12,136	No	White
3	10.00	1.19	12,368	No	Light Gray
4	12.73	2.96	12,389	Yes	Reddish Gray
5	11.80	4.43	11,768	Slightly	Reddish Gray
6	13.85	4.02	11,842	Yes	Reddish Gray
7	12.80	4.52	11,693	Yes	Reddish Gray
8	17.96	4.58	11,124	Yes	Reddish Gray
9	8.48	1.47	12,251	No	White
10	12.49	4.50	11,921	Yes	Dark Gray

Investigations of the *Bureau of Mines* on the fusibility of ash have been compiled in Table 71. The softening temperatures represent the average point of fusion. In making the tests, the ash samples were molded into solid triangular pyramids ¾-in. high and ¼-in. along the base. These were mounted in a vertical position and fused down to a spherical lump. The values thus obtained in the laboratory are said to be comparable with those obtained in the actual boiler furnace.

The softening temperatures in Table 71 vary from 1900 to 3100 degrees. Above 2400 deg., little trouble should be experienced from clinkering. The temperatures have been grouped into three classes, as follows: (1) Refractory ashes softening above 2600 deg. (2) Ashes of medium fusibility, softening between 2200 and 2600 deg. (3) Easily fusible ash, softening below 2200 deg. The coals of high softening temperatures are from the lower or older beds. The bituminous fields of Pennsylvania, however, give a more refractory ash than similar beds in West Virginia. The ash from the anthracite districts is very refractory and the softening temperatures are usually above 3000 degrees.

The softening or fusing temperature of ash is a measure of its clinkering qualities, although seldom included in coal specifications. This is undoubtedly due to the many difficulties surrounding the temperature determination, and to the fact that no definition of melting temperature has been accepted as standard.

Clinkering in boiler furnaces is due to thick or heavy fires, excessive stirring of fuel beds, live coals in ashpit, too much slack in the coal, closed ashpit doors, or to the admission of pre-heated air under grates.

With thick fires the air supply is decreased, so that the ash becomes heated. In an atmosphere furnishing oxygen, the melting point of ash is higher than if it is heated in a reducing atmosphere. A considerable thickness of ash is mixed with the burning coal in the thick fuel bed, and on account of the lower air velocity, a reducing zone exists near the grate. In the thin fire the reducing zone is confined to the last inch or two, at the top, where the few ash particles are separated and cannot fuse into clinker.

Table 71. Fusibility of Ash from the Coals of the United States.

Location and Bed	Softening Temp. Deg.	Percent in Dry Coal		Location and Bed	Softening Temp. Deg.	Percent in Dry Coal	
		of Ash	of Sulphur			of Ash	of Sulphur
ALABAMA							
Black Creek	2,530	3.31	0.83	Maylene	2,350	8.29	0.45
Clark	2,350	8.68	1.06	Montevallo	3,330	7.24	0.76
Coal City	2,250	4.35	1.10	Nickel Plate	2,620	4.73	0.75
Gholson	2,240	6.64	0.73	Pratt	2,430	5.49	1.59
Harkness	2,460	11.51	1.57	Thompson	2,230	8.85	0.52
Helena	2,430	8.91	0.46	Upper Straven	2,340	7.45	0.88
Jagger	2,690	9.81	0.67	Yellow Creek	2,370	13.90	2.91
Jefferson	2,120	7.45	2.80	Youngblood	3,130	8.62	1.08
Mary Lee	2,830	9.90	0.74				
ARKANSAS							
Denning	2,200	7.38	2.45	Paris	2,140	3.38	10.12
Hartshorne	2,120	11.59	1.40	Sluin Basin	2,180	2.23	10.36
ILLINOIS							
No. 1 Bed	2,110	11.74	4.86	No. 6 Bed	2,160	10.27	2.30
No. 2 Bed	2,010	9.97	3.58	No. 7 Bed	2,050	10.62	2.69
No. 5 Bed	1,990	10.84	3.28				
INDIANA							
No. 3 Bed	2,090	10.61	4.34	No. 6 Bed	2,040	9.91	2.65
No. 4 Bed	2,390	8.17	1.62	Minshall	2,120	9.80	2.99
No. 5 Bed	2,130	10.23	3.54				
KANSAS							
Bevier	1,980	14.83	.....	Leavenworth	2,020	18.26	5.46
Cherokee	2,110	9.42	.....	Weir-Pittsburgh	2,010	11.68	5.31
KENTUCKY							
No. 6 Bed	2,130	8.81	2.97	Jellico	2,460	6.92	1.56
No. 9 Bed	2,030	10.53	3.67	Kellioka	2,830	2.21	0.49
No. 10 Bed	1,990	11.99	4.18	Lower Boiling	2,880	11.65	1.01
No. 11 Bed	2,030	9.57	4.08	Lower Hignite	2,440	4.57	1.10
No. 12 Bed	2,150	10.20	2.30	LowerStandiford	2,260	5.24	1.81
Alum	2,940	4.37	0.61	Mason	2,320	3.93	1.14
Elkhorn	2,470	3.83	0.68	Miller Creek	2,160	4.33	1.90
Fire Clay	2,790	5.35	0.82	Poplar Lick	2,670	5.30	1.05
Flag	2,880	7.52	0.83	Rawl	2,680	7.53	1.90
Harlan	2,700	3.94	0.85	Straight Creek	2,110	3.40	1.17
Hazard	2,460	8.56	0.79	Thacker	2,430	4.42	1.39
Hickory	2,340	5.37	1.07	Upper Hance	2,330	4.74	1.61

Table 71. Fusibility of Ash from the Coals of the United States—Cont.

MARYLAND

Location and Bed	Softening Temp. Deg.	Percent in Dry Coal		Location and Bed	Softening Temp. Deg.	Percent in Dry Coal	
		of Ash	of Sulphur			of Ash	of Sulphur
Bakerstown	3,560	10.26	1.70	Lower Kittaning	2,440	10.76	2.26
Bluebaugh	2,770	12.99	1.63	Mercer	2,620	18.14	3.28
Brush Creek	2,470	9.61	1.26	Pittsburgh	2,930	7.67	1.03
Clarion	2,280	9.61	2.42	Quakertown	3,010	17.03	2.92
Franklin	2,410	8.48	1.36	Split-Six	2,220	12.42	2.55
Gallitzen	2,140	12.15	3.33	Upper Freeport	2,500	10.72	2.03
Grantsville	2,490	8.23	1.22	Upper Kittaning	3,010	9.50	0.86
Little Pittsburgh	3,010	7.95	1.18	Upper Sewickley	2,840	6.65	1.09
Lower Freeport	2,150	20.51	4.11	Waynesburg	2,410	13.75	2.58

MISSOURI

Bevier	1,960	13.47	4.90	Lower-Weir-Pittsburgh	1,940	10.78	4.45
Bowen	1,940	13.18	4.61	Mulberry	1,990	14.58	3.18
Cainsville	1,980	12.71	5.78	Milky	1,940	11.28	5.25
Cherokee	2,150	7.51	1.97	Richhill	1,970	15.47	6.12
Jordan	2,010	12.74	4.42	Tebo	2,040	11.64	4.66
Lexington	2,000	13.48	4.04	Waverly	2,020	17.43	8.29
Lower Richhill	1,940	15.39	5.43				

OHIO

Anderson	2,120	10.86	3.92	Pittsburgh	2,210	8.47	3.58
Lower Freeport	2,280	9.55	2.95	Uniontown	2,230	16.10	3.58
Lower Kittaning	2,120	9.24	5.72	Upper Freeport	2,280	8.48	3.09
Mahoning	2,040	6.59	3.67	Washington	2,520	21.90	2.98
Meigs Creek	2,330	13.02	4.23	Waynesburg	2,400	15.92	3.15
Middle Kittaning	2,450	8.00	1.86				

OKLAHOMA

Dawson	1,920	8.95	3.91	McCurtain	2,110	6.92	0.84
Henryetta	1,980	8.03	1.59	Panama	2,160	6.81	1.46
Lehigh Coal	2,150	11.46	4.17	Stigler	2,050	5.13	1.91
Lower Hartshorne	2,020	6.03	1.43	Upper Hartshorne	2,170	6.15	1.51
McAllister	2,180	6.94	1.67				

PENNSYLVANIA (Bituminous Region)

Bloss	2,630	11.96	2.25	Lower Kittaning	2,550	7.86	2.03
Brookville	2,809	12.98	1.86	Middle Kittaning	2,380	11.06	2.98
Fulton	2,940	7.36	1.18	Pittsburgh	2,360	7.17	1.43
Little Pittsburgh	2,390	8.13	1.70	Upper Freeport	2,350	9.35	2.13
Lower Freeport	2,390	8.52	2.06	Upper Kittaning	2,350	8.67	2.16

Table 71. Fusibility of Ash from the Coals of the United States—Cont.

PENNSYLVANIA—Continued—(Districts in Anthracite Region)

Location and Bed	Softening Temp. Deg.	Percent in Dry Coal		Location and Bed	Softening Temp. Deg.	Percent in Dry Coal	
		of Ash	of Sulphur			of Ash	of Sulphur
East Schuylkill..	2,990	11.19	0.78	Scranton.....	3,010	12.39	0.79
Hazelton.....	2,960	14.50	0.61	Shamokin.....	2,960	16.59	0.90
Pittston.....	3,010	6.03	0.58	West Schuylkill..	2,730	18.07	0.82
Plymouth.....	3,010	12.52	0.84	Wilkesbarre.....	3,010	13.17	0.78
TENNESSEE							
No. 4 Bed.....	2,220	9.08	3.62	Monarch.....	2,320	11.29	2.77
No. 10 Bed.....	2,150	11.42	3.14	Morgan Spring..	2,260	11.05	3.46
Angel.....	2,160	5.80	1.94	Mud Slip.....	2,640	4.21	0.92
Battle Creek....	2,520	9.68	1.52	Nelson.....	2,340	18.73	1.11
Billygoat.....	2,600	3.26	1.12	Old Eagle.....	2,290	3.57	1.39
Blue Gem.....	2,100	3.32	1.34	Old Etna.....	2,140	2.63	0.76
Bon Air No. 2...	2,180	10.27	3.24	Paint Rock.....	2,420	6.03	1.74
Castle Rock.....	2,260	10.78	2.68	Poplar Lick.....	2,610	8.36	1.84
Catoosa.....	2,250	7.11	2.59	Red Ash.....	2,570	6.13	1.13
Coal Creek.....	2,260	6.30	2.37	Rex Bed.....	2,230	5.59	1.07
Frozen Head....	2,680	6.92	0.92	Richland.....	2,590	10.53	0.92
Grassy Ridge...	2,470	3.75	1.87	Rich Mountain .	2,370	3.03	1.29
Hooper.....	2,330	2.58	0.69	Sandstone Parting.....	2,380	10.34	1.26
Jellico.....	2,350	4.95	1.87	Sewanee.....	2,460	10.02	1.20
Jordan.....	2,320	3.33	0.90	Soddy.....	2,580	16.38	1.16
Kelly.....	2,530	7.63	1.33	Upper Dean.....	2,290	12.02	2.29
Lower Dean.....	2,340	3.69	0.72	Waldon Ridge...	2,580	8.17	0.92
Mingo.....	2,390	4.25	1.27				
TEXAS							
Santa Tomas....	2,580	19.21	1.98				
VIRGINIA							
No. 4 Bed.....	2,180	6.58	0.49	Little Bed.....	3,010	21.29	0.49
"B" Bed.....	2,420	17.73	2.21	Lower Banner...	2,280	6.37	0.72
Big Bed.....	2,420	19.89	0.57	Lower Boiling...	2,720	8.74	1.12
Big A., No. 2...	2,320	6.34	0.60	Meadow.....	2,480	12.92	0.62
Big Townhill....	2,240	11.84	0.48	Milner.....	2,120	5.89	1.69
"C" Bed.....	2,210	10.26	1.40	Mohawk.....	2,160	3.49	1.32
Clintwood.....	2,670	3.26	0.87	Pardee.....	2,460	8.04	1.59
Duncan.....	2,160	6.65	0.88	Pocahontas No.3	2,420	4.26	0.54
Glamorgan.....	2,160	5.86	1.22	Pocahontas No.5	2,090	5.19	0.82
Imboden.....	2,420	11.47	1.56	Red Ash.....	2,240	5.96	0.64
Jawbone.....	2,240	19.86	1.03	Small.....	3,010	42.98	0.34
Kennedy.....	2,190	7.95	1.09	Splash Dam.....	2,720	5.77	0.65
Large Bed.....	2,880	20.19	0.62	Upper.....	3,010	29.72	0.38
Little Townhill..	2,440	8.40	0.56	Upper Banner...	2,420	6.43	0.67

Table 71. Fusibility of Ash from the Coals of the United States—Cont.

WEST VIRGINIA

Location and Bed	Softening Temp. Deg.	Percent in Dry Coal		Location and Bed	Softening Temp. Deg.	Percent in Dry Coal	
		of Ash	of Sulphur			of Ash	of Sulphur
No. 2 Gas.....	2,750	5.86	0.88	Pocahontas No. 3	2,440	4.70	0.59
Beckley.....	2,800	4.76	0.65	Pocahontas No. 4	2,480	6.31	0.64
Cedar Grove....	2,610	5.83	1.07	Pocahontas No. 5	2,700	6.23	0.62
Coalburg.....	2,960	8.80	0.76	Pocahontas No. 6	2,400	2.88	0.70
Eagle.....	2,940	4.40	0.77	Redstone.....	2,120	6.96	1.92
Fire Creek.....	2,540	6.60	0.84	Sewell.....	2,560	3.93	0.72
Lower Freeport..	2,090	9.84	3.14	Sewickley.....	2,080	9.51	3.99
Lower Kittaning.	2,660	7.64	1.76	Upper Freeport..	2,190	6.17	1.97
Mahoning.....	2,160	5.62	1.89	Welch.....	2,840	7.41	0.62
Middle Kittaning	2,110	10.93	4.06	Winifrede.....	2,970	8.44	0.83
Pittsburgh.....	2,170	7.20	2.24				

Avoiding Clinker. The following suggestions are offered by the *Bureau of Mines*:

Use thin fires and keep the fuel bed level by placing fresh coal on thin spots. Do not level fire with rake or stir it with splice bar.

Fire coal in small charges, especially if it contains much slack. This will prevent crust formation and the need of breaking it.

Do not burn coal in the ashpit. Keep water in tight ashpits, otherwise blow in steam. In heating and decomposing, the steam will absorb heat as it passes through the grate, ash and fuel bed.

Keep the ashpit doors open and regulate the draft by dampers.

When the coal contains clinkering ash, an increase of the draft, states *L. J. Joffray,* gives better combustion and reduces the slag. The air added through the fire keeps the temperature of the ash below the fusing point. Should clinkering continue, relief can be had, according to *L. Rankin,* by spreading over the grate a few shovelfuls of limestone crushed to the size of a walnut; this should be done when the fire is banked or after it is cleaned. More heat may be lost by the frequent cleaning of the fire than because of its clinkering, especially with coals that fuse into large masses. Frequently the combustion is almost entirely stopped while the clinker is being removed.

Storage of Coal

COAL in a compact or solid mass, has the following approximate weights per cubic foot of space occupied: Anthracite, 85 to 95 lb.; bituminous, 70 to 80 lb.; lignite, 65 to 75 lb. Peat weighs between 25 and 35 lb., while briquetted fuel weighs 40 to 45 lb. per cubic foot. Table 72 gives the approximate weights of coals in storage.

The variation in weight of different grades of coal is not due solely to the specific gravity of the solid coal. The quantity of surface moisture, the proportions of coarse and fine coal, and the amount of shaking or settling also influence its weight as delivered or as stored. Coals of high fixed carbon are relatively heavy, while increased ash content lowers the weight per cubic foot. The younger coals and those of high moisture content are relatively of low weight.

Table 72. Approximate Weights of Coals.

Name	Anthracite		Name	Bituminous	
	Lb./cu. ft.	Cu. ft./ton		Lb./cu. ft.	Cu. ft./ton
Broken.....	70	28	Lump.....	60	33
Stove.....	65	31	Nut.....	55	36
Pea.....	60	33	Slack.....	50	40
Buckwheat.....	55	36	Run of mine...	45	45

Deterioration in Storage

COAL undergoes a change in heat value and weight due to weathering when stored in the open, indoors or under water. Usually the volume and sometimes the weight is increased. Coal stored under fresh or salt water may retain from 2 to 12 per cent moisture, but its heat value is practically unchanged. Exposure of coal to the air, either in the open or under cover, reduces its heat value. The quantity of carbon and disposable hydrogen is diminished, while the quantity of oxygen and indisposable hydrogen is increased.

Extensive experiments by *S. W. Parr* on Illinois coal showed that the most rapid loss in heat value occurred during the first ten days. After this the rate of loss diminished, although the loss continued indefinitely. The total loss in the open was substantially the same as in covered bins, ranging from 1 to 3 per cent after exposure for one year.

Fine coal suffers a greater loss in heat value than do the larger sizes. The loss of volatile matter is negligible in its effect on heat value. After being exposed to air for one year, West Virginia slack lost less than 1 per cent in heat value; run-of-mine only 0.5 per cent; Pittsburgh run-of-mine 0.4 per cent; and Wyoming sub-bituminous about 3.5 per cent. This last coal deteriorated 5.3 per cent in heat value after an exposure to air for 2¾ years.

Coal in transit will lose in heat value because of oxidation of its new surface after mining. The loss increases with the hydrogen content, ranging from 0.1 per cent for semi-bituminous to 1.3 per cent for sub-bituminous and lignite.

Spontaneous Combustion of Coal

IN the storage of coal, spontaneous combustion must be provided against. Anthracite coal is not subject to spontaneous combustion and can be safely stored in any quantity. Soft coal may ignite and disintegrate unless stored under water.

Spontaneous combustion of coal is due to slow oxidation in an air supply sufficient to support the oxidation, but insufficient to carry away all the heat formed. The friability of the coal, or its tendency to break up into fine particles and dust, as well as its chemical nature, are the major causes of spontaneous combustion.

Dust and small sizes of coal are dangerous in a coal pile containing larger-sized coal, because the resultant openings permit the flow of a moderate amount of air to the interior. The amount of volatile matter in the coal does not of itself increase the liability to spontaneous heating, and there is no assurance of safety in the storage of low volatile or smokeless coals. Pittsburgh run-of-mine has shown a greater tendency to spontaneous

Finance Building, Philadelphia, Pa., equipped with Heine Boilers.

combustion than have high volatile gas coals. Western coals with a high amount of volatile are usually liable, but this is due particularly to the high oxygen content. Such coals become heated readily by oxidation faster than the heat can be dissipated.

The influence of moisture and sulphur on spontaneous combustion has not been definitely determined. The *Bureau of Mines* has not found a single instance of moisture causing heating, although laboratory tests by *Richter* show that moist coal oxidizes rapidly. While there are no conclusive data on the action of sulphur, experiments indicate that it is only a minor factor.

According to the *Bureau of Mines,* the following precautions should be observed in storing coal:

1. Do not pile in cones; pile evenly not over 12 ft., and so that any point in the interior will not be over 10 ft. from an air cooled surface.
2. If possible, store only screened nut coal.
3. Keep out the dust as much as possible by reducing the handling to a minimum.
4. Pile so that lump and fine sizes are distributed evenly, not allowing lumps to roll to the bottom and form air passages.
5. Rehandle and screen after two months.
6. Do not store near outside heat sources, even though moderate in degree.
7. After mining, allow six weeks' seasoning before storing.
8. Avoid alternate wetting and drying.
9. Prevent air reaching the interior of the pile by avoiding interstices around timbers and brick work, or through porous bottoms, such as coarse cinders.
10. Do not attempt to ventilate with pipes as they may do more harm than good.

In practice coal that has been stored six to eight weeks and has even become heated will seldom again heat spontaneously if rehandled and thoroughly cooled by the air.

The drenching of the coal pile will not extinguish a fire, because the crust that forms over the fire prevents the water from reaching it. It is necessary to remove the coal from around the burning part and to spread out the coal before water can be used with effect.

Briquets

COAL dust, culm, slack and similar waste due to mining of the coals and low grade fuels unsuitable for transportation can be used as fuel by briquetting or pressing into solid blocks. Domestic experiments and the experience of foreign manufacturers indicate that briquetting increases the commercial value of low grade coals sufficiently to more than cover the cost of production.

Undoubtedly on account of the low cost, briquetted fuel is used in European countries. In the United States, the difference in cost between steam sizes and slack is small and the cost of manufacturing the briquetted fuel is high, so that its use is limited to locomotive furnaces and to house heaters or stoves. However, tests by the *U. S. Geological Survey* with briquetted coal in hand-fired furnaces of Heine Boilers have repeatedly shown satisfactory economy, with no smoke.

Briquets are generally machine made. Coal dust and small pieces of coal are mixed with a binding substance to hold the particles together, are heated, and are subjected to heavy pressure in molds. The fuel material is sometimes mixed with clay, rolled into balls by hand, and then air-dried. They are made in shapes and sizes, Fig. 213, weighing from 1 oz. to several pounds. Rectangular briquets measuring 6¾ by 5½ by 4½ in. and having rounded corners, weigh about 7 pounds. Smaller briquets, of 6¾ by 4¼ by 2½ in. weigh about 4 lb. each.

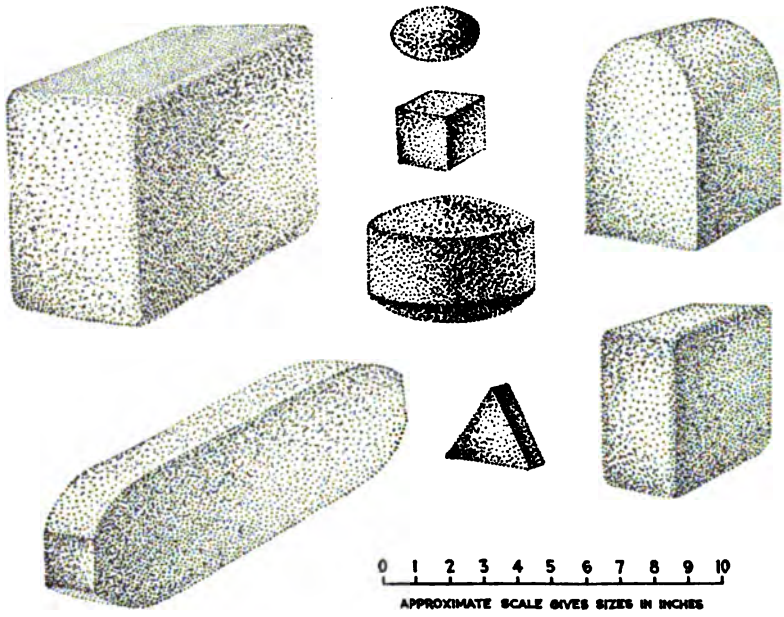

Fig. 213. Different Styles, Shapes and Sizes of Coal Briquets.

As the coal resources of the country diminish, the economic importance of briquetted fuel will be better realized. Further development should also lead to methods for the recovery of valuable by-products from the coals used in making briquets.

The size and shape of a briquet determine the extent of its use. Heavy rectangular blocks are convenient for storage. According to *J. E. Mills,* the French Navy estimates the weight of briquets that can be stored in a given space as 10 per cent more than that of lump coal. The British Admiralty reports a gain as high as 20 per cent. To hasten combustion large briquets are broken up when fed into the furnace.

Stored briquets are not subject to spontaneous combustion or to noticeable weathering due to exposure. Briquets not over 2 lb. in weight are favored abroad. The most common forms are prismatic with round edges or ovoid shapes. These briquets are easily handled, cause little dust and minimum breakage. The rounded edges permit good air circulation and therefore thorough combustion.

The properties of briquetted fuel depend largely upon the grade and amount of binder used with the coal mixture. The most common binder used, states *C. L. Wright,* is a pitch made either from coal tar or water-gas tar, although starch, lime and sulphite liquor are sometimes used.

With the correct binder smokeless combustion can be expected. Other advantages of this fuel are regularity in size, uniform condition of fuel-bed, no clinker, minimum attention to fires, high heating value, high rates of combustion, small loss from breakage, and little weathering.

Anthracite briquets have been made from coal dust mixed with dry pitch. According to *E. F. Loiseau,* the pitch represents 10 per cent of the bulk of the briquet and is prepared from tar at 572 deg. by separating the volatile matter it contains. The fuel mixture is continuously heated by steam so

as to maintain a temperature of 212 deg., at which the pitch acts as a binder. It is then passed between rollers made of semi-oval molds, in which the briquets are formed. The pressed fuel, about the size of an egg, drops on to a belt conveyor; this carries it to a screen in eight minutes, the briquets then being cool enough for handling and delivery.

Carbocoal briquets are made in sizes ranging from 1 to 5 oz. and represent about 72 per cent of the raw coal. As described by *C. T. Malcolmson,* the raw coal is first crushed and then distilled at a temperature of about 900 deg., yielding gas, tar and "semi-carbocoal," which is rich in carbon. Pitch obtained from the tar is then mixed with the semi-carbocoal and formed into briquets. These are in turn distilled at a temperature of about 1800 deg., resulting in the recovery of additional coal-tar products and the production of the carbocoal fuel. The fuel is dense, uniform in size and quality, and of grayish black color. Analysis shows from 1 to 3 per cent moisture; 0.75 to 3.5 per cent volatile matter; 82 to 90 per cent fixed carbon and 7 to 12 per cent ash. It is said that carbocoal requires no greater draft than bituminous coal.

Lignite briquets can be made without a binding material, according to the *Bureau of Mines.* Lignite briquets burnt in furnaces of steam boilers have proved equal to good Middle West bituminous coal. They will endure handling and resist weathering better than raw lignite, and manual labor is not required from the time the lignite is loaded into the mine car until the briquets are delivered to the consumer.

The lignite after mining is crushed and screened and then dried to reduce the high moisture content. Closed conveyors carry the powdered lignite to hoppers that feed the molds, where it is subjected to a pressure of about 20,000 lb. per sq. in. The heat developed during compression liberates the tarry matter from the material and cements the fuel.

Lignite yields gas, ammonia, oils and tar on carbonizing. The residue can be made into briquets by the addition of a binding material. In one plant, states *J. B. C. Kershaw,* the ovens or retorts take a 10-ton charge of lignite and heat it for two hours at about 900 deg. The yield of by-products at this temperature include 10,000 cu. ft. of gas, 13 gal. of tar oil, and 2.5 lb. of ammonium sulphate per ton of lignite. After the distillation is completed the residue is mixed with pitch and other binders to form the briquets. Analysis of these lignite briquets shows 1.34 per cent moisture; 7.6 per cent volatile matter; 84.04 per cent fixed carbon; 7.02 per cent ash, and a heat value of 14,000 B.t.u. per pound.

Peat briquets are possible commercial fuel for steam boilers. The peat used abroad as a domestic fuel is not as rich in combined nitrogen as the peat of the United States. By gasification the latter will yield ammonia, tar and other chemical compounds of value.

Peat produces a large amount of gas of good quality when consumed in a gas producer. The gas can be used in engines or for the firing of boilers. With by-product gas producers, sufficient ammonia can be recovered to pay for most of the operating costs, so that the gas and power it furnishes are practically free.

Technical success, says *F. P. Coffin,* has been attained by several processes but commercial success in peat manufacture has not yet been demonstrated. Of the several plants that have at times operated in the United States, one uses a centrifugal pump for removing the peat from its bed. According to *Wm. Kent,* the pump discharges into storage bins, and after some of the water in the peat has drained away, the material is further dried by exhaust steam and stack gases. When dry, the peat is reduced to powder, and conveyed to a press where it is compressed into regularly shaped blocks. The briquetted peat is clean and withstands handling as well as transportation.

A part of 3388 H. P. installation of Heine Boilers in the Sand Springs, Okla. plant of the Pierce Oil Corporation. This company operates 5650 H. P. of Heine Boilers.

Solid Fuels Other Than Coal

WOOD fuel consists of sawdust, shavings or other refuse produced in quantity, as in wood-working plants and saw mills. Cord wood is used to a limited extent, when timber is plentiful and other fuels expensive. Wood, of course, is used in starting coal fires.

Table 73. Weights and Compositions of Air-Dried Woods.

Wood	Lb. per cu. ft.	Lb. in 1 cord	C.	H.	O.	N	Ash	Heat Value, B.t.u. per lb.
Ash.....	46	3,520	49.18	6.27	43.91	0.07	0.57	5,420
Beech.....	43	3,250	49.36	6.01	42.69	0.91	1.06	5,400
Birch.....	45	2,880	50.20	6.20	41.62	1.15	0.81	5,580
Elm.....	35	2,350	48.99	6.20	44.25	0.06	0.50	5,400
Oak.....	52	3,850	49.64	5.92	41.16	1.29	1.97	5,460
Pine.....	30	2,000	50.31	6.20	43.08	0.04	0.37	6,700
Poplar.....	36	2,130	49.37	6.21	41.60	0.96	1.86	6,660
Willow.....	25	1,920	49.96	5.96	39.56	0.96	3.37	6,830

Freshly cut wood contains about 45 per cent of water by weight. After air-drying the moisture content is 15 to 25 per cent. The average heat value of dry wood is about 7700 B.t.u. per pound. The weights and compositions of air-dried wood are given in Table 73. As fuel, 1 lb. of wood is assumed to equal 0.40 lb. of coal, or 1 lb. of coal equals 2½ lb. of wood. Measuring in bulk, 2 cords of wood are considered the equal of 1 ton of coal. Sometimes 1 lb. of wood is said to give an evaporation of 6 lb. of water from and at 212 deg., which represents a heat value of 5794 B.t.u. per pound. By weight, shavings, sawdust and refuse lumber have the same heat value as the original wood.

Charcoal is made by heating wood in a closed vessel. Distillation begins at about 400 deg., leaving a residue of common black charcoal. Other grades of charcoal are obtained at higher carbonizing temperatures. The wood melts, and at about 620 deg. yields a mass similar to soft coal coke. At temperatures over 2000 deg. a black dense solid charcoal is formed.

Wood will yield about 18 per cent charcoal and 82 per cent volatile matter by weight at high temperature, and 68 per cent charcoal and 32 per cent volatile at low temperature. The carbon content varies then from 85 to 55 per cent. The heat value is generally about 11,000 B.t.u. per pound. Charcoal absorbs moisture rapidly up to 15 per cent. It is seldom used in boiler practice except when it is a by-product, as in the manufacture of wood alcohol or turpentine.

Coke is the solid substance remaining after coals are distilled in retorts or partly burned in ovens. The bituminous coals are used extensively, although lignite and peat offer commercial possibilities. In gas retorts, a large yield of gas of high illuminating value is desired, so that the coke is a by-product. In beehive coke ovens high-grade coke is produced for use in metallurgical processes. In by-product coke-ovens, good coke, a large coke yield or else gas and chemical by-products may be desired. The coke yield varies between 35 to 90 per cent of the weight of coal. Cokes are generally rough and may be dense and soft, or porous and hard. The color varies from silvery, light gray to dark gray and black. They readily attract and retain moisture and if not properly protected may contain 20

per cent by weight. Coke burns without flame or smoke and makes an intense fire when forced. The heat value is between 12,000 and 14,000 B.t.u. per pound. Analysis gives an average of 1.3 per cent volatile matter; 88 per cent fixed carbon; 0.8 per cent sulphur; 1.5 per cent moisture; and 8.4 per cent ash. The average weight of solid coke is about 45 lb. per cubic foot. Heaped coke weighs about 30 lb. per cubic foot, or 75 cubic feet to the long ton. Coke generally costs as much as coal, so that it is not used to any extent as a boiler fuel.

Coke breeze consists of the fine particles left when the coke is drawn from the ovens, or of the screenings from coke prepared for blast furnaces. It represents about 2 to 2½ per cent of the coal originally used in the coking process. Generally, it is considered as waste, but by burning coke breeze under boilers, its fuel value can be utilized.

Corn has been used as fuel when the crop was plentiful and the price low. At 15 cents a bushel corn would be as cheap a fuel as coal at about $8 per ton. It is sometimes used as an emergency fuel in grain-growing localities. Boiler tests by *C. R. Richards* showed that bituminous coal gave 1.9 times as much heat per pound as corn on account of the difference in heat value of the fuels. Calorimeter tests place the heat value of corn and cob at about 8000 B.t.u. per pound, the cob alone at 7500 B.t.u., and dry corn at 9000 B.t.u. Corn weighs about 56 lb. per bushel.

Straw, used in some localities as fuel, consists of the stems or stalks of grain. Its composition is about 36 per cent carbon; 5 per cent hydrogen; 38 per cent oxygen; 0.5 per cent nitrogen; 15.75 per cent moisture; and 4.75 per cent ash, which gives a heat value of 5411 B.t.u. per pound. Dry straw will average from 5600 to 6700 B.t.u. per pound. Straw when compressed weighs about 7 lb. per cubic foot.

Tan bark is the fibrous portion, known as spent tan, which is left from ground bark employed as a leather tanning agent. The raw bark is usually air-dried oak or hemlock but in the process it absorbs sufficient moisture to make the spent tan weigh more than twice the raw material, two-thirds of this weight being water. The waste heat of the chimney gases can be used for drying the fuel.

Fig. 214 gives heat values of tan bark for different moisture contents, derived from Table 74. The net heat value cannot be measured directly, so that the total calorific value should be determined by combustion in a fuel calorimeter. At best, the useful heat of a liquid, gaseous or wet fuel, can be determined only approximately, for it involves the ultimate analysis and assumptions depending upon operating conditions.

Table 74. Calorific Value of Tan Bark with various Percentages of Moisture.

Moisture	B.t.u. per Lb. Wet Tan.	Losses of Heat due to			Net Heat Value, B.t.u.	Efficiency, Per cent	Lb. Evap. per Lb. Wet Tan.
		Moisture	H in Fuel	Heating Air			
0.20	6,336	261	564	1,446	4,065	64.2	4.19
0.30	5,544	392	493	1,266	3,393	61.2	3.50
0.40	4,752	522	423	1,085	2,772	57.3	2.81
0.50	3,960	653	352	904	2,051	51.8	2.11
0.60	3,168	784	282	723	1,379	43.5	1.42
0.70	2,376	914	211	542	709	29.8	0.73
0.80	1,584	1,045	141	362	36	2.5	0.03

Composition of dry tan bark assumed to be C, 0.50; H, 0.06; O, 0.40; N and Ash, 0.04. Heating value by Dulong's formula 7,920 B.t.u. per pound. Exit gases are assumed to be at 600 deg. Fahr.

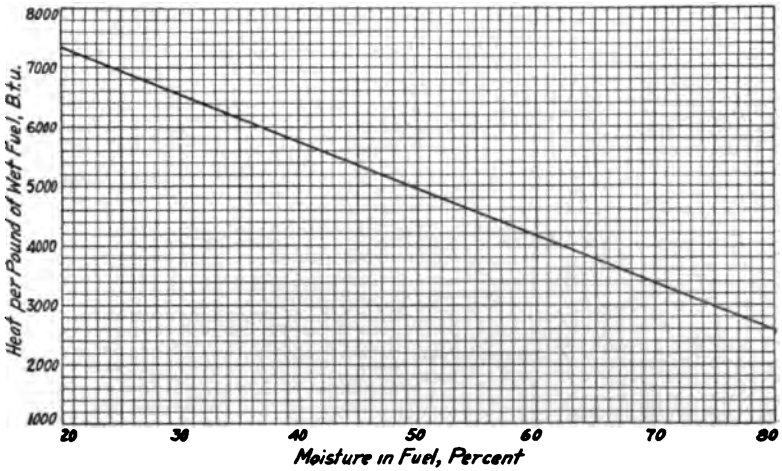

Fig. 214. Heat Value of Tan Bark.

Dry tan bark consists of about 50 per cent carbon; 6 per cent hydrogen; 40 per cent nitrogen; and 4 per cent ash, giving a heat value of 8000 B.t.u. per pound. Dry tan bark with 15 per cent ash has a heat value of about 6100 B.t.u.; and with 1.5 per cent ash, about 9000 B.t.u. per pound. Wet tan bark, as used for boiler firing, has a heat value of about 5500 B.t.u. per pound with 30 per cent moisture; and 3500 B.t.u. with 60 per cent moisture. An evaporation from and at 212 deg. of 2 to 3 lb. of water per pound of wet fuel can be expected in specially designed furnaces.

Bagasse, or megass, that part of the sugar cane remaining after the extraction of the juice, is widely used as fuel for boilers on sugar plantations. The refuse resulting from the treatment of the raw cane by the sugar mill rolls is known as "mill bagasse," while the product remaining after a series of soaking processes of the raw chopped cane is known as "diffusion bagasse," The fuel value of bagasse depends upon the amount of woody fiber it contains and upon the amount of combustible matter, such as sucrose, glucose and gum, retained in the liquid. Louisiana bagasse, according to *E. C. Freeland,* consists of about 40 per cent fibre, 7 per cent sucrose and other constituents, the remaining 53 per cent being water. Bagasse obtained from tropical cane, according to *L. A. Becuel,* contains 37 to 45 per cent woody fiber; 9 to 10 per cent combustible; and 46 to 53 per cent water. The composition of dry bagasse ranges between 43 and 47 per cent carbon; 5.4 and 6.6 per cent hydrogen; 45 and 49 per cent oxygen; and 5 and 3 per cent ash. Its average heat value as determined by test is 8300 B.t.u. per pound. Owing to the usual moisture content of the fuel as fired, its heat value then is only 4000 B.t.u. or less. One pound of the fuel will evaporate about 2 to 3 lb. of water from and at 212 deg. By utilizing waste gases and drying the bagasse before firing, better results can be obtained. The fuel yield from sugar cane can be taken as 25 per cent. One ton of cane as ground will therefore give 500 lb. or more of wet bagasse.

Table 75 gives the calorific values of diffusion bagasse of varying percentages of moisture.

Table 76 gives the calorific value of one pound of mill bagasse at different extractions, based upon a cane of 10 per cent fiber and juice of 15 per cent total solids.

1200 H. P. of Heine Boilers installed in the Yubari Coal Mines of the Hokkaido Colliery & Railroad Co., Hokkaido, Japan. This company has installed 2300 H. P. of Heine Boilers.

Table 75. Fuel Values of One Pound of Diffusion Bagasse at Various Degrees of Moisture.

Moisture in Bagasse, Per cent.	Heat Developed per Pound of Bagasse, B.t.u.	Heat Available per Pound of Bagasse, B.t.u.	Number of Pounds of Bagasse Equivalent to 1 Lb. of Coal of 14,000 B.t.u.
0	8,325	8,325	1.68
20	6,660	6,420	2.18
30	5,827	5,468	2.56
40	4,995	4,516	3.10
50	4,162	3,563	3.93
60	3,330	2,611	5.41
70	2,497	1,658	8.44
75	2,081	1,183	11.90

Table 76. Fuel Values of One Pound of Mill Bagasse at different Extractions upon Cane of 10 per cent Fiber and Juice of 15 per cent Total Solids.

Per cent Extraction on Weight of Cane.	Per cent Moisture in Bagasse	Fibre		Sugar		Molasses		Total Heat Developed, B.t.u.	Heat Required to Evaporate the Water Present, B.t.u.	Heat Available, B.t.u.	Pounds Bagasse Required to Equal 1 lb. Coal of 14,000 B.t.u.	Coal Equivalent per Ton of Cane, Pounds
		Per cent in Bagasse	Fuel Value, B.t.u.	Per cent in Bagasse	Fuel Value, B.t.u.	Per cent in Bagasse	Fuel Value, B.t.u.					
90	0.00	100.00	8,325	.....	.....	.....	.....	8,325	.....	8,325	1.68	119
85	28.33	66.67	5,550	3.33	240	1.67	116	5,900	339	5,561	2.52	119
80	42.50	50.00	4,162	5.00	361	2.50	174	4,697	509	4,188	3.34	120
75	51.00	40.00	3,330	6.00	433	3.00	209	3,972	611	3,361	4.17	120
70	56.67	33.33	2,775	6.67	482	3.33	232	3,489	679	2,810	4.98	120
65	60.71	28.57	2,378	7.15	516	3.57	248	3,142	727	2,415	5.80	121
60	63.75	25.00	2,081	7.50	541	3.75	261	2,883	764	2,119	6.61	121
55	66.12	22.22	1,850	7.78	562	3.88	270	2,682	792	1,890	7.40	121
50	68.00	20.00	1,665	8.00	578	4.00	278	2,521	815	1,706	8.21	122
45	69.55	18.18	1,513	8.18	591	4.09	284	2,388	833	1,555	9.00	122
40	70.83	16.67	1,388	8.33	601	4.17	290	2,279	849	1,430	9.79	123
25	73.67	13.33	1,110	8.67	626	4.33	301	2,037	883	1,154	12.13	124
15	75.00	11.77	980	8.82	637	4.41	307	1,924	899	1,025	13.66	124
0	76.50	10.00	832	9.00	650	4.50	313	1,795	916	879	15.93	126

Fig. 215 gives the heat value of both "diffusion" and "mill" bagasse, corresponding to Column 2 of Table 75 and Column 9 of Table 76.

Heat Value of Wet Fuels

THE useful heat liberated by fuels fired wet is lower than the total heat value determined by calorimeter tests. The calorific power, as fired, of green wood, tan bark and bagasse, is termed the gross heat value. By deducting from this gross value the heat required to evaporate the moisture and raise it to the temperature of the gases leaving the boiler, the net heat

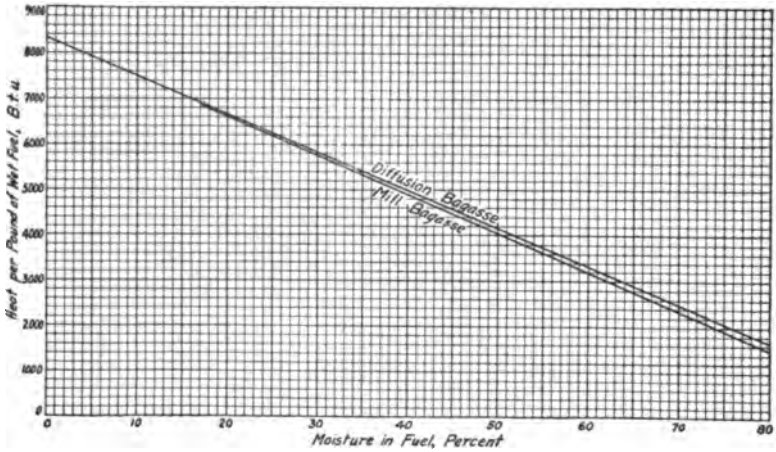

Fig. 215. Heat Value of Bagasse.

value absorbed by the boiler water is obtained. Therefore, a dry sample having a total of 7000 B.t.u. per pound by calorimeter test will have a gross heat value of 5600 B.t.u. per pound, if it contains 20 per cent moisture.

To compute the net heat value of wet fuels, the following formula can be used:

$$h.\,l. = (9\,H + W) \times [\,(212 - t) + 972] + [0.48\,(t_1 - 212)\,] \quad (59)$$

in which $h.\,l.$ is the B.t.u. lost per pound; H is the hydrogen content; W the water; t and t_1 are the temperatures of the air supply and the chimney gases. The result is the heat lost in the superheated steam formed by the combustion of the hydrogen and from the water in the wet fuel.

If green wood contains 6 per cent hydrogen and 24 per cent water as fired, and the air supplied for combustion is at 72 deg., resulting in a stack temperature of 462 deg., the loss is:

$$(9 \times 0.06 + 0.24) \times [\,(212 - 72) + 972] + [0.48\,(462 - 212)\,] = 987 \text{ B.t.u.}$$

Assume that this wood sample has a heat value of 6987 B.t.u. by calorimeter test. The net heat value is found by deducting the loss due to hydrogen and water, which gives 6000 B.t.u. per pound for steaming purposes.

Liquid Fuels

FUEL oil consists practically of petroleum or of its residue after the more volatile oils have been removed. The petroleum or crude oil is a viscous mineral oil varying in color from light brown through shades of green to black. The specific gravity is generally between 0.80 and 0.98, corresponding to 45 and 12 deg. Baumé, respectively.

Fuel oil at 10 deg. Baumé has a specific gravity of 1.00, the same as that of water. The gravity of oil is usually measured on the Baumé scale. This can be converted by the following *Bureau of Standards* formula, for liquids lighter than water:

$$\text{Specific Gravity} = \frac{140}{130 + \text{deg. Bé}} \quad (60)$$

$$\text{Deg. Baumé} = \frac{140}{\text{Spec. Grav.}} - 130 \quad (61)$$

Crude oil is a mixture of hydrocarbons that often contain a small percentage of sulphur, oxygen and nitrogen. It can be distilled into gasoline, benzine, kerosene and other oils, which differ considerably physically and chemically, depending upon the locality, the source of supply, and upon the treatment or distillation process. After the kerosene has been run off, the oils remaining, of from 12 to 25 deg. Baumé, are available as fuel for steam boilers.

Gasoline is a petroleum product of about 74 to 64 deg. Baumé. Benzine is a distillate of about 55 deg. Baumé, while kerosene ranges from about 48 to 35 deg. Baumé. However, the high price of these lighter distillates prevents their use as a boiler fuel.

Oils are classified by their flash point, the temperature at which they give off inflammable vapors; viscosity, the tendency of the oil particles to hold together, thus retarding the flow; moisture, in the form of an emulsion in the heavier oils; sulphur, which produces obnoxious gases and has a corroding effect if condensed on boiler tubes and stack; density; and heat value. The properties of fuel oils from different localities are given in Table 77, by *C. E. Lucke.*

Table 77. Composition and Heat Value of Oil Fuels.

Kind	Deg. Baumé	Ultimate analysis, per cent				Heat value, B.t.u. per lb.
		C.	H.	O+N.	S.	
California fuel oil.....	14.93	81.52	11.61	6.92	0.55	18,926
California crude.....	16.24	86.30	16.70	.....	0.80	21,723
Kansas crude.....	31.67	85.40	13.07	.....	.....	20,345
Ohio crude.....	38.89	85.00	13.80	0.60	0.60	20,752
Pennsylvania crude...	23.18	86.10	13.90	.....	0.60	20,949
Texas fuel oil	21.25	83.26	12.41	3.83	0.50	19,654
Texas crude.....	21.56	84.60	10.90	2.87	1.63	18,977
West Virginia crude...	36.47	84.30	14.10	1.60	.....	20,809

The heat value of oil can be determined accurately by calorimeter test. An approximate method proposed by *J. N. LeConte* gives the value, free from moisture, as 17,680 + (60 × deg. Bé) B.t.u. per pound.

Another method utilizes the *Dulong* formula:

$$B.t.u. = 14{,}544\,C + 62{,}028\left(H - \frac{O}{8}\right) + 4050\,S \qquad (62)$$

in which C is carbon, H is hydrogen, O is oxygen and S is sulphur, as obtained from the ultimate analysis. This formula gives a heat value of about 5 per cent higher than that of California oils, as determined by calorimeter. Fig. 216 shows other heat values. These indicate that per pound the lighter oils have a higher calorific value than the heavier fuels, but a lower value per gallon. A barrel of heavy petroleum will therefore have a higher heat value than a barrel of lighter oil.

The average California oil has a specific gravity of about 0.96, which corresponds to 15.16 deg. Baumé at a temperature of 60 deg. The average weight of a gallon of oil is 8.03 pounds. As it usually comes in barrels of 42 gal., the average weight of a barrel of fuel oil is 337 pounds. The heat value is about 18,700 B.t.u. per pound, which should easily give an equivalent evaporation from and at 212 deg. of about 14.5 lb. of water per pound of fuel.

Peoples Gas, Light & Coke Co., Chicago, Ills., operating Heine Boilers.

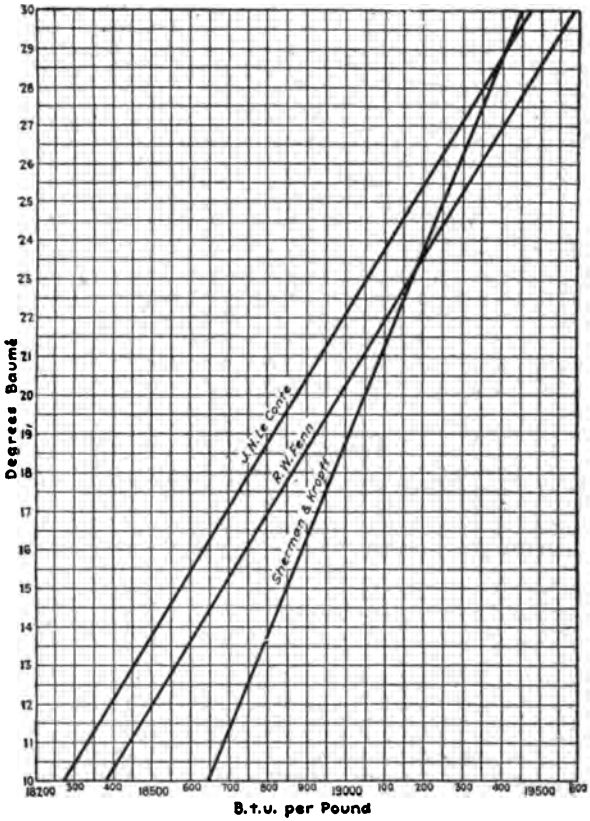

Fig. 216. Heating Value of Fuel Oil.

Coal tar is a by-product of coking processes. Its commercial value usually prevents its use as a fuel. This black, viscous liquid must be heated and strained before it can be used. The coal tar yield is from 4½ to 6½ per cent of the weight of the coal used in gas or coke manufacture. The specific gravity is about 1.25, so that a gallon weighs 10.4 pounds. It is lower in hydrogen and higher in carbon than petroleum, an ultimate analysis showing 89.21 per cent carbon; 4.95 per cent hydrogen; 1.05 per cent nitrogen; 4.23 per cent oxygen; 0.56 per cent sulphur; and a trace of ash. Coal tar has a heat value of about 15,800 B.t.u. per pound.

Tar oils include pitch, creosote, anthracene and other residuum from distillation. Oil tar produced in gas apparatus has a specific gravity of 1.15, is less viscous than coal tar, and can be handled much like other fuels. Its composition is 92.7 per cent carbon; 6.13 per cent hydrogen; 0.11 per cent nitrogen; 0.69 per cent oxygen; 0.37 per cent sulphur; and a trace of ash, giving a heat value of 17,100 B.t.u. per pound.

Colloidal fuel was developed by the *Submarine Defense Association* to meet war conditions. It is an emulsion of powdered solid fuel and oil fuel. A so-called fixateur is used to stabilize the elements of the mixture

that have different specific gravities, and thus maintain a homogeneous product. Most oils in their natural state can be mixed with pulverized solids to make the smokeless colloidal fuel. Dried and pulverized bituminous and anthracite coals can be used, as can lignite, peat, coke, charcoal or wood, so long as two-thirds of the dry solid fuel is combustible.

The colloidal fuel is fired with the same equipment used for oil burning. A marine boiler test gave an equivalent evaporation of 13.6 lb. of water per pound of colloidal fuel at an efficiency of 76.8 per cent, while straight Mexican oil gave an equivalent evaporation of 13.97 lb. of water per pound of oil fuel at an efficiency of 73.32 per cent. With coal of 13,500 B.t.u. per pound and crude oil of 18,200 B.t.u. per pound, the colloidal fuel has a heat value of 17,000 B.t.u. per pound, with 25 per cent solid fuel in suspension; and 16,300 B.t.u. per pound with 40 per cent of solids in the mixture. It is possible to combine 45 per cent oil, 20 per cent tar and 30 per cent powdered coal and still obtain a stable colloidal fuel that can be stored for a month or more without the solids settling. With such mixture it is said at least 50 per cent of the oil fuel now used can be saved, and equal if not greater heat value per barrel obtained at a lower cost.

Gaseous Fuels

IN gas fuels each constituent has a known heating power. The total heat value of a cubic foot of gas can be determined by multiplying the fractional constituents and the corresponding heating powers per cubic foot, and by adding the products. The low heat values are given by *C. E. Lucke* as follows:

Gas	B.t.u. per cu. ft.
Hydrogen	292
Methane	959
Ethylene	1595
Benzine (or illuminants contained)	3795
Carbon monoxide	341

Natural gas is often held at high pressure in huge natural, underground reservoirs that are tapped by sinking wells. The gas is piped and distributed over long distances, and delivered at working pressures of 2 to 8 ounces.

The principal combustible components of natural gas are methane (marsh gas) and hydrogen. The incombustible gases are carbon dioxide, nitrogen and oxygen. Table 78, compiled by *G. A. Burrell,* gives the average heat value and the composition for different samples.

Artificial gases are made principally from coal or oil. Natural gas costs 10 to 30 cents per 1000 cu. ft., while coal and water gases cost $1 or more. With coal at $5 per ton, producer gas will deliver 35,000 B.t.u. for one cent, while natural gas at 20 cents gives 50,000 B.t.u. for one cent.

The compositions and heating values of gas fuels are compared in Table 79. Owing to the variations in heat values, different quantities of gas are required to generate one boiler horsepower.

Junker Gas Calorimeter

THE heat value of gaseous fuels is generally determined with the Junker Gas Calorimeter illustrated in Fig. 217.

This instrument consists of a vertical cylindrical water chamber containing vertical tubes, which is heated by the gas burned in a Bunsen lamp beneath. The products of combustion pass upward through a combustion chamber and downward through the tubes, while the water passes in at the bottom and out at the top in a continuous current. The quantity of gas is measured by a gas meter, and the quantity of water by collecting the overflow

Table 78. Properties of Natural Gas.
(G. A. Burrell, Nat. Gas Assn. of America, May, 1914)

Location of Wells	Volumetric Composition, Per cent					Higher Heating Value B.t.u. per Cu. Ft. 32° F and 29.92 in.	Specific Gravity, Air = 1
	Carbon Dioxide, CO_2	Oxygen O_2	Nitrogen N_2	Methane CH_4	Ethane C_2H_6		
Armstrong Co., Pa.	0.05	0.0	1.45	81.6	16.9	1,184	0.64
Osage Co., Okla...	1.10	0.0	4.6	94.3	0.0	1,004	0.58
Kiefer, Okla.....	2.40	0.0	1.8	64.1	31.7	1,272	0.74
Barron Co., Ky....	2.5	0.0	1.3	23.6	69.7	1,548	0.91
Barron Co., Ky....	2.6	0.0	5.1	44.1	48.2	1,367	0.84
Moab, Utah.....	3.6	0.0	5.6	90.8	0.0	967	0.61
Moab, Utah.....	3.5	0.0	6.5	90.0	0.0	959	0.62
Northwestern Ore.	3.0	0.0	0.9	96.1	0.0	1,023	0.58
Crawford Co., Pa..	0.0	0.0	2.3	6.6	91.1	1,766	1.01
Northwestern Ore.	0.5	0.0	12.5	87.0	0.0	927	0.60
Tillamook, Ore....	0.1	0.0	97.9	2.0	0.0	21	0.96
Stillwater, Nev....	1.3	0.0	3.1	95.6	0.0	1,018	0.58
Clarion Co., Pa....	0.0	0.0	1.1	96.4	2.5	1,073	0.57
Forest Co., Pa.....	0.0	0.0	1.0	70.8	28.2	1,279	0.70
Clarion Co., Pa....	0.0	0.0	1.7	80.5	17.8	1,189	0.65
Butler Co., Pa.....	0.0	0.0	0.9	53.3	45.8	1,420	0.78
Kings Co., Cal....	30.4	0.0	2.4	66.2	1.0	724	0.85
Greybull Field, Wyo	0.2	0.0	0.8	81.7	17.3	1,192	0.64
Casing head gas...	0.0	0.0	1.3	51.5	47.2	1,427	0.77
	0.5	0.0	3.1	64.1	32.3	1,282	0:68
McKean Co., Pa..	0.0	0.0	1.0	86.0	13.0	1,159	0.59
Caddo Parish Field, La.....	0.9	0.0	1.5	97.6	0.0	1,039	0.57
Park County, Okla.	0.0	0.0	1.8	94.4	3.8	1,076	0.59
Bradford, Pa.....	0.0	0.0	8.9	18.9	72.2	1,534	1.00
Nortonville, N. D..	1.3	0.0	13.6	85.1	0.0	907	0.62
Schulto Field, Okla.	0.5	0.0	1.5	76.4	21.6	1,215	0.67
Casing head gas used for production of gasoline..	0.0	0.0	3.3	78.7	18.0	2,424	1.38
From Pittsburg gas supply.....	0.0	0.0	1.2	79.2	19.6	1,208	0.65
From Columbus gas supply.....	0.0	0.0	1.6	80.3	18.1	1,193	0.64

Table 79. Composition of Gas Fuels, by Percentages.

Fuel	Combustible—by Volume				Incombustible-by Volume			Heat Value, B.t.u. per cu. ft.
	Hydrogen	Methane	Ethylene	Carbon Monoxide	Carbon Dioxide	Oxygen	Nitrogen	
Natural gas.....	1.7	94.16	0.30	0.55	0.29	0.30	2.80	1,000
Coal gas.....	39.78	45.16	6.38	7.04	1.08	0.06	0.50	730
Water gas.....	21.8	30.7	12.9	28.1	3.8	0.5	2.2	700
Coke oven gas...	53.2	35.0	2.0	6.0	2.0	.....	2.0	620
Blast furnace gas	3.0	.....	.....	27.5	10.0	.....	59.4	100
Producer gas....	2.81	5.56	.....	14.34	10.5	0.1	66.7	110
Oil gas.....	32.0	48.0	16.5	.....	.....	0.5	3.0	850

Four 306 H. P. Heine Standard Boilers installed in the Central High School, Washington, D. C.

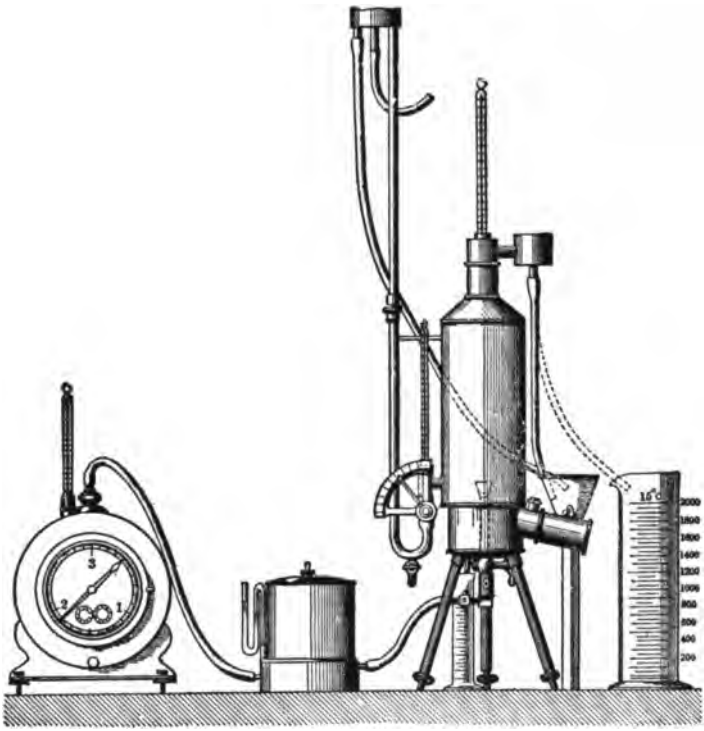

Fig. 217. The Junker Gas Calorimeter.

discharged from the apparatus. Thermometers are inserted at the points of entrance and exit. The heat of combustion of a cu. ft. of gas is determined by multiplying the rise of temperature in deg. F. by the weight of water in lb., and dividing the product by the volume of gas in cu. ft. The result thus found after being corrected for moisture and reduced to the equivalent at 32 deg. and 14,696 lbs. per sq. in., is what is termed the "higher value," and this is the value, unless otherwise stated, which is generally employed.

The "low value" is obtained by multiplying the weight of the condensed vapor resulting from the combustion, expressed in lb., by the total heat of atmospheric steam above the temperature of the condensed vapor, dividing the product by the volume of the gas in cu. ft., and subtracting the quotient from the higher value.

Heat Value of Liquid and Gaseous Fuels

THE heating power of a fuel, as used in calculating boiler trials, is the value determined by calorimeter test. Some fuels contain hydrogen, and others moisture, thus reducing the heat available for steam.

Most liquid fuels and some gases contain a high percentage of hydrogen. Their calorific power as determined by calorimeter test is called the "high" heat value, while the available heat is known as the "low" heat value. The difference between the two is equal to the latent heat of steam formed

by the burning of the hydrogen, which cannot be absorbed by the water in the boiler. As hydrogen combines with eight times its weight of oxygen, the result is 9 lb. of water for the combustion of 1 lb. of hydrogen. The latent heat of steam being 971.7 B.t.u. per pound, this combustion represents a total of 8745 B.t.u. per pound of hydrogen. Deducting this from 60,626 B.t.u., the high heat value of hydrogen, gives 51,892 B.t.u. as the low heat value per pound of hydrogen. On a volumetric basis the high heat value of hydrogen can be taken as 340 B.t.u. per cubic foot and the low heat value as 290 B.t.u., leaving 50 B.t.u. per cubic foot that is not absorbed by the boiler water.

If a calorimeter test gives the high heat value of oil as 18,500 B.t.u. per pound and the fuel contains 10 per cent hydrogen, then the low heat value is $18,500 - (0.10 \times 8745) = 17,625$ B.t.u. per pound approximately.

If a sample of gas fuel containing 20 per cent hydrogen by volume has a high heat value of 710 B.t.u. per cubic foot as determined by calorimeter, then the low heat value is $710 - (0.2 \times 50) = 700$ B.t.u. per cubic foot.

Buying Fuels Under Contract

THE purchase of fuels under contract and specification involves expense in sampling and analysis, but many engineers believe the advantages gained are worth the cost. Large consumers of coal and oil have adopted the contract and specification method, because it guarantees economy when quality and price are considered. *Power* reports a saving of $20,000 in the coal bills of 18 plants, the fuel having been tested at a central laboratory at a cost of $1,500 for the year.

Specifications insure a more uniform grade of fuel than can be otherwise obtained. Boiler plant operation can be studied more carefully and adjustments made to secure the highest efficiency with the grade of fuel delivered. However, sampling and analyzing are expensive. Fuel contractors hold that many specifications are unreasonable, and sometimes add 5 to 10 per cent to the price to cover contingencies.

Specifications for Coal

THE following specification for the purchase of coal on a heat value basis is given by *J. E. Woodwell,* as typical of *central power station* practice:

A. The company agrees to furnish and deliver to the consumer, ..., at such times and in such quantities as ordered by the consumer for consumption at said premises during the term hereof, at the consumer's option, either or all of the kinds of coal described below; said coals to average the following assays:

Coal of size passing through screen having circular perforation in diam.....	.....in.	.....in.	.....in.
Coal of size passing over screen having circular perforation in diam.....	.....in.	.....in.	.....in.
Moisture in coal as delivered	.....%	.....%	.....%
Ash in coal as delivered.....	.....%	.....%	.....%
Heat value per pound of dry coal.....	.....B.t.u.	.....B.t.u.	.....B.t.u.
From following county.....	.....	.....	.....
From following state.....	.....	.....	.....

Coal of the above respective descriptions and specified assays, not average assays, to be hereinafter known as the contract grade of the respective kinds.

B. The consumer agrees to purchase from the company all of the coal required for consumption at said premises during the term of this contract, except as set forth in paragraph C below, and to pay the company for each ton of 2000 lb. avoirdupois of coal delivered and accepted in accordance with all of the terms of this contract at the following contract rate per ton of each respective contract grade, at which rates the company will deliver the following respective numbers of B.t.u. for one cent, the contract guarantee:

Kind of Coal	Contract Rate per Ton		Contract Guarantee
.....	$.....	Equal to	.....net B.t.u. for 1 cent
.....	$.....	=	..... " " "
.....	$.....	=	..... " " "

Said B.t.u. for one cent being in each case determined as follows:

> Multiply the B.t.u. per lb. of dry coal by the per cent moisture, expressed in decimals, and subtract the product so found from the B.t.u. Then multiply the remainder by 2000 and divide this product by the contract rate per ton plus one-half the ash percentage, both *expressed as cents.*

C. It is provided that the consumer may purchase for ..... consumption at said premises coal other than herein contracted for test purposes, it being understood that the total of such coal so purchased, shall not exceed 5 per cent of the total consumption during the term of this contract.

D. It is understood that the company may deliver coal hereunder containing as high as 3 per cent more ash and as high as 3 per cent more moisture and as low as 500 fewer B.t.u. per pound dry than specified above for contract grades.

E. Should any coal delivered hereunder contain more than the per cent of ash or moisture or fewer than the number of B.t.u. per pound dry allowed under paragraph D hereof, the consumer may, at its option, either accept or reject the same.

F. All coal accepted hereunder shall be paid for monthly at a price per ton determined by taking the average of the delivered values obtained from the analysis of all the samples taken during the month, said delivered value in each case being obtained as follows:

> Multiply the number of B.t.u. delivered per pound of dry coal by the per cent of moisture delivered, expressed in decimals, and subtract the product so found from the B.t.u. delivered per pound of dry coal. Then multiply the remainder by 2000 and divide this product by the contract guarantee. From the quotient, expressed as dollars and cents, subtract one-half of the ash percentage delivered, *expressed as cents.*

How such a rule works is illustrated in the diagram, Fig. 218, in which the standard is 9 per cent moisture, 8 per cent ash and 13,500 B.t.u. per pound of dry coal at $3 per ton. Coal of 500 B.t.u. and 3 per cent each of moisture and ash, either below or above the specification base, is the minimum acceptable and the maximum practicable, respectively, as shown in the diagram. On this basis the average premium or penalty is a little over 5 cents for each 100 B.t.u. above or below the standard.

An Ohio street railway company has specifications drawn on a basis of a graded scale of premiums and penalties. The established standard for heat value ranges from 12,610 to 12,759 B.t.u. per pound of dry coal. The standard for ash is from 0 to 15 per cent and for sulphur from 0 to 3.5 per cent. The premiums on heat value are graded to a maximum of 21 cents per ton, above the basic price, for 13,960 B.t.u. and over. The penalties

A part of twenty-four 316 H. P. Heine Boilers in the plant of the Champion Fibre Co., Canton, N. C.

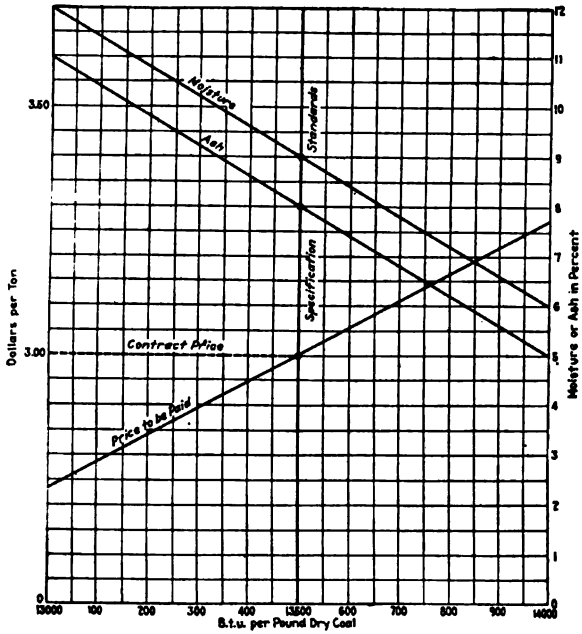

Fig. 218. Comparison of Base Price and Price to be Paid for Coal Bought on Specifications.

are also graded to as high as 50 cents per ton for heating powers of 10,660 to 10,809 B.t.u. There is no premium for the minimum ash content, but there is a penalty for excess ash, amounting to 50 cents per ton when the ash is 29.1 per cent and higher. The penalty for sulphur above the standard is graded to 45 cents per ton when the content is 10 per cent or more.

This contract provides that should the coal company or contractor fail at any time to supply the quality and quantity of coal specified, the consumer may purchase a supply in the open market, at prevailing rates, and collect from the contractor any difference in cost. The company reserves the right to cancel and relet the contract should the coal company fail to meet all the terms specified.

The contract of a New York transit company gives an average premium and exacts an average penalty of about 2 cents for every 100 B.t.u. above or below the standard. Its standard is 14,201 to 14,250 B.t.u., 20 per cent or less volatile matter; 9 per cent or less ash, and 1½ per cent or less sulphur. For heat values above the standard the premium reaches 26 cents per ton for 15,505 B.t.u. per pound of dry coal. For values below it the penalty is a maximum of 45 cents per ton at 12,000 B.t.u. or lower. The other penalties are highest at 18 cents a ton for 24 per cent or more of volatile matter; 23 cents for 13½ per cent or more of ash, and 12 cents for a maximum of 2½ per cent sulphur.

The *U. S. Government,* a large user of coal for power and heating purposes, buys fuel under specifications that merge the heat value, ash, moisture and price, into a single unit of cost per 1,000,000 B.t.u. Provisions are made for penalties and premiums with respect to the contract standard.

The intent of the specifications is to insure a coal delivery similar within reasonable limits to the standard of the contract and not continually to make corrections in price for slight variations in heat value. A 2 per cent variation from the standard is allowed before the price is corrected, as it is recognized that the quality of the coal cannot be controlled within narrow limits. Orders of 50 tons or less are sampled only at the discretion of the Government, because the collecting and preparing of a representative sample, and the cost of analysis, would considerably increase the cost.

Under these specifications it is possible to utilize the output from a group of coal mines. Anthracite for power and heating purposes includes the pea and buckwheat sizes from the mines in the counties of Susquehanna, Lackawanna, Luzerne, Carbon, Schuylkill, Columbia, Sullivan, Northumberland and Dauphin, in the state of Pennsylvania. Coal accepted as bituminous includes the usual bituminous grades, as well as semi-bituminous, subbituminous, and lignite.

All the coals are analyzed and tested by the *Bureau of Mines,* on the basis of its specifications. The main provisions for bituminous and anthracite coal are:

Proposals. Sealed proposals, in duplicate, on blank forms supplied by the....., to furnish such quantities of coal as specified herein as may be required for use of the....., for the fiscal year ending....., will be received until 2 o'clock p. m., ..., at the office of the....., and then opened.

Each bidder shall have the right to be present, either in person or by attorney, when the bids are opened.

Proposals, in duplicate, must be forwarded to the....., postage prepaid.

Proposals must be made in duplicate on the form provided, and must be signed by the individual, partnership, or corporation making the same. When made by a partnership, the name of each partner must be signed. If made by a corporation, proposals must be signed by the officer thereof authorized to bind it by contract, and be accompanied by a copy, under seal, of his authority to sign.

The proposals must be accompanied by cash or by certified check drawn payable to the order of the....., in the amount equal to 2 per cent of the estimated amount involved for the fuel for which bids are submitted, the minimum amount in any case to be $10. This requirement is solely to guarantee, if the award is made on the proposal, that within 10 days after notice is given that an award has been made, the bidder will enter into a contract in accordance with the terms of the proposal and execute a bond for the faithful performance thereof, with good and sufficient sureties as hereinafter required. In the event of the failure of the bidder to enter into contract or execute bond, the cash or check guarantee will be forfeited.

Bond. Each contractor shall be required to give a bond, with two or more individual sureties or one corporate surety duly qualified under the act of Congress approved Aug. 13, 1894, in which the contractor and the sureties shall covenant and agree that, in case the said contractor shall fail to do or perform any or all of the covenants, stipulations, and agreements of said contract on the part of the said contractor to be performed as therein set forth, the said contractor and his sureties shall forfeit and pay to the United States of America any and all damages sustained by the United States by reason of any failure of the contractor fully and faithfully to keep and perform the terms and conditions of his contract, to be recovered in an action at law in the name of the United States in any proper court of

competent jurisdiction. Such sureties (except corporate sureties) shall justify their responsibility by affidavit showing that they severally own and possess property of the clear value in the aggregate of double the amount of the above-mentioned forfeiture over and above all debts and liabilities and all property by law exempt from execution. The affidavit shall be sworn to before a judge or a clerk of a court of record or a United States attorney, who must certify of his own personal knowledge that the sureties are sufficient to pay the full penalty of the bond.

If the estimated amount involved in the contract does not exceed the sum of $200, then the bond may be waived with the consent of the department involved.

Reservations. The right is reserved by the Government to reject any and all bids and to waive technical defects. Bidders are cautioned against guaranteeing higher standards of quality than can be maintained in delivered coal, as the Government reserves the right to reject any and all bids, if the Government has information regarding analyses and test results that indicate that higher standards have been offered than probably can be maintained.

The right shall be reserved by the Government to purchase for the purpose of making boiler tests, other coal than that herein contracted for, provided the amount so purchased shall not exceed 10 per cent of the estimated consumption during the period covered by this agreement.

If it should appear to be to the best interests of the Government to do so, the right is reserved to award the contract for supplying coal at a price higher than that named in a lower bid, or in lower bids.

If the bidder to whom the award is made shall fail to enter into a contract as herein provided, then the award may be annulled and the contract let to the next most desirable bidder without further advertisement, and such bidder shall be required to fulfill every stipulation expressed therein, as if he were the original party to whom the contract was awarded; provided, however, that such bidder is notified of said award within 60 days after the date on which the bids on this contract were opened. If such notice should not be given within said 60 days, then the acceptance of the award will be optional with the said bidder.

No contract can be lawfully transferred or assigned.

No proposal will be considered from any person, firm, or corporation in default of the performance of any contract or agreement made with the United States, or conclusively shown to have failed to perform satisfactorily such contract or agreement.

Quantity. The estimated quantity of coal in ..... tons of 2,000 lb. to be purchased is based upon the previous annual consumption, but the right will be reserved to order a greater or less quantity, subject to the actual requirements of the service.

Delivery. The coal shall be delivered in such quantities at such times as the Government may direct. (Place of delivery to be stated.)

All the available storage capacity of the Government coal bunkers shall be placed at the disposal of the contractor to facilitate delivery of coal under favorable conditions. When an order is issued for coal, the contractor upon commencing a delivery on that order shall continue the delivery with such rapidity as not to waste unduly the services of the Government inspector.

After verbal or written notice shall have been given to deliver coal under this contract a second notice may be served in writing upon the contractor to make delivery of the coal so ordered within a reasonable time, to be determined by the Government official in charge, after receipt of said second notice. Should the contractor for any reason fail to comply

Brown Palace Hotel, Denver, Colo., equipped with Heine Boilers.

with the second request, the Government shall be at liberty to buy coal independent of this contract, and for coal so purchased to charge against the contractor and his sureties any excess in price over the price which would have been paid to the contractor had the coal been delivered by him.

The contractor shall be allowed to deliver coal during the usual hours of teaming—that is, between 8 a. m. and 5 p. m.

Weighing. (To be stated, by whom and where the coal shall be weighed.)

Sampling. The contractor shall have the privilege of having a representative present to witness the collection and preparation of the samples to be forwarded to the laboratory.

The samples shall be collected and prepared in accordance with the method given in the appendix, attached hereto as a part of these specifications and proposals.

Analyses. The samples shall be immediately forwarded to the *Bureau of Mines,* Department of the Interior, Washington, D. C., and they shall be analyzed and tested in accordance with the method recommended by the American Chemical Society and by the use of a bomb calorimeter. Such analyses and tests shall be made at no cost to the contractor. The results shall be reported by the *Bureau of Mines* in not more than fifteen days after the receipt of the sample. If more than one sample is received from the same delivery, the fifteen days shall date from the receipt of the last sample taken.

Description of Coal Desired. The coal must be a good coal..... (kind and size to be specified), and must be adapted for successful use in the particular furnace and boiler equipment.

Bidders are required to specify the coal offered in terms of moisture in the coal "as received," and of ash, volatile matter, sulphur, and B.t.u. in "dry coal," such values to become the standards for the coal of the successful bidder. In addition, the bidders are required to give the trade name of the coal offered, and other designation; this information shall be furnished in spaces provided hereinafter.

Coal of the description and analysis specified is herein known as coal of the contract grade. Bidders are cautioned against specifying higher standards than can be maintained, for to do so will result in deductions in price and may result in the rejection of the delivered coal or the cancellation of the contract. In this connection it should be recognized that the small "mine samples" usually indicate a coal of higher economic value than that actually delivered in carload lots, because of the care taken to separate extraneous matter from the coal in the "mine samples."

Award. In determining the award of this contract consideration will be given to the quality of the coal (expressed in terms of moisture in coal "as received," of ash in "dry coal," and B.t.u. in "dry coal"), offered by the respective bidders and to the operating results obtained with the same and with similar coals on previous contracts or by test, as well as to the price per ton.

Bids may be rejected from further consideration if they offer coals regarding which the Government has information that they possess unsatisfactory physical characteristics or volatile matter or sulphur or ash contents, or that they are unsatisfactory because of clinkering or excessive refuse, or because of having failed to meet the requirements of city smoke ordinances, or for other cause that would indicate that they are of a character or quality that the Government considers unsuited for the storage space or the furnace equipment of the particular contract.

Methods of Comparing Bids. In order to compare bids as to the quality of the coal offered, all proposals shall be adjusted to a common basis.

The method used shall be to merge the four variables—moisture content, ash content, heating value, and price bid per ton—into one figure, the cost of 1,000,000 B.t.u. The procedure under this method shall be as follows:

(a) All bids shall be reduced to a common basis with respect to moisture, by dividing the price quoted in each bid by the difference between 100 per cent and the percentage of moisture guaranteed in the bid. The adjusted bids shall be figured to the nearest tenth of a cent.

(b) The bids shall be adjusted to the same ash percentage by selecting as the standard the proposal that offers coal containing the lowest percentage of ash. The difference in ash content between any given bid and this standard shall be divided by two and the price in such bid, adjusted in accordance with the above, multiplied by the quotient. The result shall be added to the above adjusted price. The adjusted bids shall be figured to the nearest tenth of a cent.

(c) On the basis of the adjusted price, allowance shall then be made for the varying heat values by computing the cost of 1,000,000 B.t.u. for each coal offered. This determination shall be made by multiplying the price per ton adjusted for ash and moisture content by 1,000,000, and dividing the result by the product of 2,000 multiplied by the number of B.t.u. guaranteed. If the coal is purchased on the basis of 2,240 lb. to the ton, the factor of 2,240 should be used instead of 2,000.

After the elimination of undesirable bids, the selection of the lowest bid of those remaining on the basis of the cost per 1,000,000 B.t.u. may be considered by the Government as a tentative award only, the Government reserving the right to have practical service test or tests made under the direction of the *Bureau of Mines*, the results to determine the final award of contract. The interested bidder or his authorized representative may be present at such test.

Coal Subject to Rejection. It is understood that coal containing 3 per cent more moisture, or 4 per cent more ash, or 3 per cent more volatile matter, or 1 per cent more sulphur, or 4 per cent fewer B.t.u. than the specified guaranties as to the standards for the coal hereunder contracted for, or coal furnished from a mine or from mines other than herein specified by the contractor, unless upon written permission of the Government, shall be considered subject to rejection, and the Government may, at its option, either accept or reject the same. Should the Government have consumed a part of such coal subject to rejection, such consumption shall not impair the Government's right to cause the contractor to remove the remainder of the delivered coal subject to rejection.

It is agreed that if the contractor shall furnish coal in three consecutive deliveries, or in case more than 20 per cent of the coal delivered to any date during the life of this contract shall contain 3 per cent more moisture, or 2 per cent more ash, or 3 per cent more volatile matter, or 1 per cent more sulphur, or 2 per cent fewer B.t.u. than the specified guaranties as to the standards for the coal hereunder contracted for, or if the coal is furnished from a mine or from mines other than herein specified, unless upon written permission of the Government, then this contract may, at the option of the Government, be terminated, or the Government may, at its option, purchase coal in the open market until it may become satisfied that the contractor can furnish coal equal to the standards guaranteed, and the Government shall have the right to charge against the contractor any excess in price of coal so purchased over the corrected price that would have been paid to the contractor had the coal been delivered by him.

Removal of Rejected Coal. The contractor shall be required to remove, without cost to the Government, within 48 hours after notification, coal that has been rejected by the Government. Should the contractor not remove rejected coal within the said 48 hours, the Government shall then

be at liberty to have the said coal removed from its premises and to dispose of such coal by sale, as the Government shall elect. The proceeds from such sale, less all costs incidental to its removal and to the sale, shall be paid over to the contractor.

Determination of Price. The Government hereby agrees to pay the contractor within thirty days after the completion of an order or delivery for each ton of 2,000 lb. of coal delivered and accepted in accordance with all the terms of this contract, the price per ton determined by taking the analysis of the sample, or the average of the analyses of the samples if more than one sample is analyzed, collected from the coal delivered upon the basis of the price herein named, adjusted as follows for variations in heat value, ash content, and moisture content from the standards guaranteed herein by the contractor.

Heat Unit Adjustment. Considering the coal on a "dry coal" basis, no adjustment in price shall be made for variations of 2 per cent or less in the number of B.t.u. from the guaranteed standard. When the variation in heat units exceeds 2 per cent of the guaranteed standard, the adjusted price shall be proportioned and shall be obtained as follows:

$$\frac{\text{B.t.u. delivered coal ("dry-coal" basis)}}{\text{B.t.u. ("dry-coal" basis) specified in contract}} \times \text{bid price.}$$

The adjusted price shall be figured to the nearest tenth of a cent.

As an example, for coal delivered on a contract guaranteeing 14,000 B.t.u. on a "dry-coal" basis at a bid price of $3 per ton, showing by calorific test results varying between 13,720 and 14,280 B.t.u., there would be no price adjustment. If, however, by way of further example the delivered coal shows by calorific test 14,350 B.t.u. on a "dry-coal" basis, the price for this variation from the contract guaranty would be, by substitution in the formula:

$$\frac{14{,}350}{14{,}000} \times \$3 = \$3.075$$

Ash Adjustment. No adjustment in price shall be made for variations of 2 per cent or less below or above the guaranteed percentage of ash on the "dry-coal" basis. When the variation exceeds 2 per cent, the adjustment in price shall be determined as follows:

The difference between the ash content by analysis and the ash content guaranteed shall be divided by two and the quotient shall be multiplied by the bid price, and the result shall be added to or deducted from the B.t.u. adjusted price or the bid price, if there is no B.t.u. adjustment, according to whether the ash content by analysis is below or above the percentage guaranteed. The adjustment for ash content shall be figured to the nearest tenth of a cent.

As an example of the method of determining the adjustment in cents per ton for coal containing an ash content varying by more than 2 per cent from the standard, consider that coal for which the above-mentioned heat unit adjustment is to be made has been delivered on a contract guaranteeing 10 per cent ash, and shows by analysis an ash content of 7.5 per cent. The adjustment in price would be determined as follows:

The difference between 10 and 7.5 which is 2.5 would be divided by 2, and the quotient of 1.25 multiplied by $3, resulting in an adjustment of 3.7 cents per ton, which in this case would be an addition. The price after adjustment for the variations in heating value and ash content would be $3.075 plus $0.037, or $3.112.

Moisture Adjustment. The price shall be further adjusted for moisture content in excess of the amount guaranteed by the contractor, the deduction being determined by multiplying the price bid by the percent-

age of moisture in excess of the amount guaranteed. The deduction shall be figured to the nearest tenth of a cent.

As an example, consider that coal for which the above-mentioned heat unit and ash adjustments are to be made, and as having been delivered on a contract guaranteeing 3 per cent moisture, and that the coal shows by analysis 4.5 per cent moisture; then the bid price would be multiplied by 1.5 (representing excess moisture), giving 4.5 cents as the deduction per ton. The price to be paid per ton for the coal would then be $3.112, less $0.045, or $3.067.

Partial Payment. If the coal on visual inspection by the Government inspector appears to be acceptable coal, the Government shall have the right, immediately on the completion of an order, to make payment on 90 per cent of the amount of the bill, based on the tonnage delivered and the bid price per ton. The 10 per cent withheld is to cover any deduction on account of the delivery of coal that on analysis and test is subject to an adjustment in price. If the 10 per cent withheld should not be sufficient to cover the deduction, then the amount due the Government may be taken from any money thereafter to become due to the contractor, or may be collected from the sureties. Because of the distance of the point of delivery from the laboratory, requiring several days for the transmittal of samples and the return of analytical report, because of loss of the original sample. necessitating the forwarding of the reserve sample, or for any other reason that would result in delayed payment, should such be withheld until receipt of analytical report, the Government may, as circumstances in its opinion warrant, exercise the foregoing right.

Information to be Supplied. The following spaces should be filled in by the bidder for each bid, for if the information called for is not supplied, the proposal may be regarded as informal and rejected:

The undersigned agrees to furnish to the..... the coal described below, in tons of 2,000 lb. each, and in quantity as may be required during the fiscal year ending, in accordance with the foregoing specifications; the coal to be delivered in such quantities and at such times as the Government may direct.

(a) Kind and size of coal.....
(b) Commercial name of coal.....
(c) Name of mine or mines.....
(d) Location of mine or mines (town, county, and State).....
.....
.....
(e) Name or other designation of coal bed or beds.....
.....
.....
(f) Railroad on which mine or mines are located.....
.....
.....
(g) Name of operator of mine or mines.....
(h) Percentage of moisture in coal "as received".....
(i) Percentage of ash in "dry coal".....
(j) Percentage of volatile matter in "dry coal".....
(k) Percentage of sulphur in "dry coal".....
(l) British thermal units per pound of "dry coal".....
(m) Additional description of coal deemed of importance by the bidder
.....
.....
.....
.....
(n) Bid price per ton of 2,000 pounds.....

Specifications for Oil

FUEL OILS are commonly specified according to their density. While this is accepted trade practice, it is not an accurate gage of the fuel. The *heavy* oils are of an asphalt base, viscous, sluggish, and of relatively low heating power. The *light* oils are fluid at ordinary temperatures, are volatile, rich in hydrocarbons and high in heating power. The heating power, however, depends mainly upon the hydrogen and carbon content, and when reduced to ultimate analysis these values are about the same for both heavy and light oils. The commercial value of fuel oil depends upon how easily it can be handled, or how completely it can be atomized by the burner equipment, and these features are controlled by the viscosity of the fuel.

Viscosity can be defined as molecular friction or the resistance to internal movement of a liquid. It is generally measured by the scale of a viscometer, such as the Saybolt, Redwood or Engler, which indicates the time required for an amount of oil to flow through a standard orifice or short tube under fixed conditions of head and temperature. The result, sometimes expressed in "degrees," is simply a time ratio. The type of viscometer should always be named in specifying viscosity, because the standards vary in different instruments.

As the viscosity is materially lessened as the temperature increases, the fuel oil in power-plant practice is heated to about 160 deg. before being fed to the burners. At this temperature, California oils have a viscosity between 3.5 and 8.5 deg. Engler. Many of the lighter oils are sufficiently mobile at ordinary temperatures and do not require pre-heating. In general, oil fuel is heated to within 50 deg. of the flash point for boiler operation with mechanical burners.

The *flash point* of the fuel indicates the temperature at which inflammable gases or vapors are given off. For oil fuels, it ranges from 220 to 280 deg. For safety in handling this should not be below 150 deg. When stored in tanks and at ordinary temperatures, there is practically no danger as the oil does not form any appreciable amount of gas at temperatures below the flash point. The flash point is determined by heating the oil fuel, usually in a closed container, and testing with a spark or flame. The vapor or gas is driven off and flashes or ignites. The temperature at which ignition takes place is called the flash point. In the so-called open test an open vessel prolongs the flash point, the temperature being higher than with the closed instruments of Abel, Pensky or Marten, which are considered standard.

By continuing the heating beyond the flash point until the *flash* becomes permanent and the fuel continues to burn a temperature known as the *burning point* is reached. As a free supply of air is required in this test, the open-cup method is used. For Kern River oil, the burning point can be taken as between 260 and 270 degrees.

The properties of oil, as outlined, are of prime importance in the purchase of the fuel, and are therefore included in commercial specifications.

Naval Specifications for Oil. The *British Navy* specifies a flash point not lower than 175 deg., closed-cup test. The water content must not exceed 0.5 per cent; sulphur not over 3 per cent; and acidity expressed as oleic acid, a maximum of 0.05 per cent.

The *U. S. Navy* requires a hydrocarbon oil of best quality, free from grit, acid and other foreign matter. A barrel of 42 gal., each gallon of 231 cu. in. at 60 deg., is the standard. For a variation of 10 deg. from the standard temperature, 0.4 per cent is added or deducted to correct the measured quantity. The oil must not contain more than 1 per cent water and sediment. If over 1 per cent, the excess is either deducted from the volume or else the fuel is rejected.

Viscosity at 100 deg. must not be higher than 200 Engler or 7000 seconds Saybolt. The flash point must not be below 150 deg. as the minimum by the Abel or Pensky-Marten closed-cup test, or 175 deg. by the Tagliabue open-cup method. For acceptance it should not be lower than the temperature at which the viscosity is 8 deg. Engler. As water is unity on the Engler scale, an oil having a viscosity of 8 deg. Engler at a temperature of 180 deg. will have a flash point of 180 deg. The equivalent of 8 deg. Engler is taken as 280 sec. Saybolt.

Railroad Fuel Oil. The contract form of a large railroad system using oil as fuel, calls for the following:

Fuel oil should have a density ranging between 13 and 29 deg. Baumé at 60 deg. It should contain no sand or other foreign matter, such as sticks, waste and stone. The moisture content should be a minimum. Oil containing over 2 per cent water and other impurities will be rejected.

Viscosity to be so low that the fuel oil will flow readily through a 4-in. pipe at 70 deg. temperature.

Oil will not be accepted when the flash point is less than 110 deg. as tested by the Tagliabue open-cup method. The fuel is to be heated at the rate of 5 deg. per minute and the test flame applied at one-minute intervals after 90 deg. has been reached.

Government Oil Fuel. For the purchase of oil fuel for the different departments of the U. S. Government, the *Bureau of Mines* has outlined the main features controlling the efficient utilization of fuel oil under steam boilers, as follows:

Fuel oil should be either a natural homogeneous oil or a homogeneous residue from a natural oil; if the latter, all constituents having a low flash point should have been removed by distillation; it should not be composed of a light oil and a heavy residue mixed in such proportions as to give the density desired.

It should not have been distilled at a temperature high enough to burn it, nor at a temperature so high that flecks of carbonaceous matter began to separate.

It should not flash below 140 deg. in a closed Abel-Pensky or Pensky-Marten test.

Its specific gravity should range from 0.85 to 0.96 at 59 deg.; the oil should be rejected if its specific gravity is above 0.97 at that temperature.

It should be mobile, free from solid or semi-solid bodies, and should flow readily, at ordinary atmospheric temperature and under a head of 1 ft. of oil, through a 4-in. pipe 10 ft. in length.

It should not congeal or become too sluggish to flow at 32 degrees.

It should have a heating value of not less than 18,000 B.t.u. per pound; 18.450 B.t.u. to be the standard. A bonus is to be paid or a penalty deducted according as the fuel oil delivered is above or below this standard.

It should be rejected if it contains more than 2 per cent water or more than 1 per cent sulphur.

It should not contain more than a trace of sand, clay, or dirt.

CHAPTER 14

FEED WATER

WATER, the most widely distributed liquid in nature, is the fluid generally employed for converting heat energy into work by its expansion in the form of steam.

Properties of Water

CHEMICALLY pure water is a chemical combination of the two elements, hydrogen and oxygen, in the proportion of two parts hydrogen by volume to one part oxygen (H_2O), or one part hydrogen by weight to eight parts of oxygen. Distilled water may be generally regarded as chemically pure.

Water reaches its maximum density, 62.425 lb. per cu. ft. at 39.1 deg., and expands if this temperature is either raised or lowered. Fig. 219 shows its variation in weight and volume at temperatures from 20 to 250 deg. The values given are those at saturation pressure; that is, the pres-

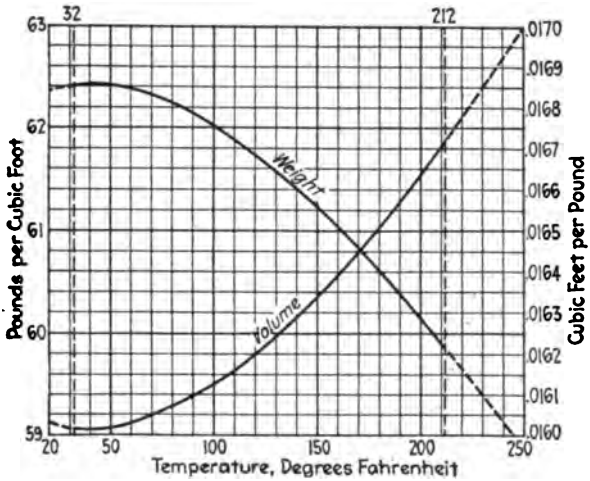

Fig. 219. Variation of Weight and Volume of Water with Temperature.

sure at which liquid and vapor in contact at the same temperature will remain in equilibrium. For temperatures between 32 and 212 deg., the weights and volumes at atmospheric pressure are practically indistinguishable from those at saturation pressure, as water is almost incompressible. The dotted lines beyond these ranges represent the volume and weight of water in contact with steam at the pressures (above or below ordinary atmospheric) corresponding to the temperatures given.

The specific heat of water at 63 deg. is taken as unity, that is, it requires 1 B.t.u. to raise a pound of water from 63 to 64 deg. The specific heat varies slightly at other temperatures, being 1.02 at 20 deg.; reaching its

minimum, 0.995, at 100 deg.; and rising to 1.18 at 600 deg. The term, "mean specific heat" is applied to the difference in heat capacity per pound at two different temperatures, divided by the temperature difference. The mean specific heat of water from 32 to 175 deg. is 0.999, and for greater ranges it gradually rises, reaching 1.062 for the range from 32 to 600 deg. For many engineering purposes, the specific heat of water can be regarded as constant, and the heat liberated or absorbed taken as 1 B.t.u. per pound per degree of temperature change.

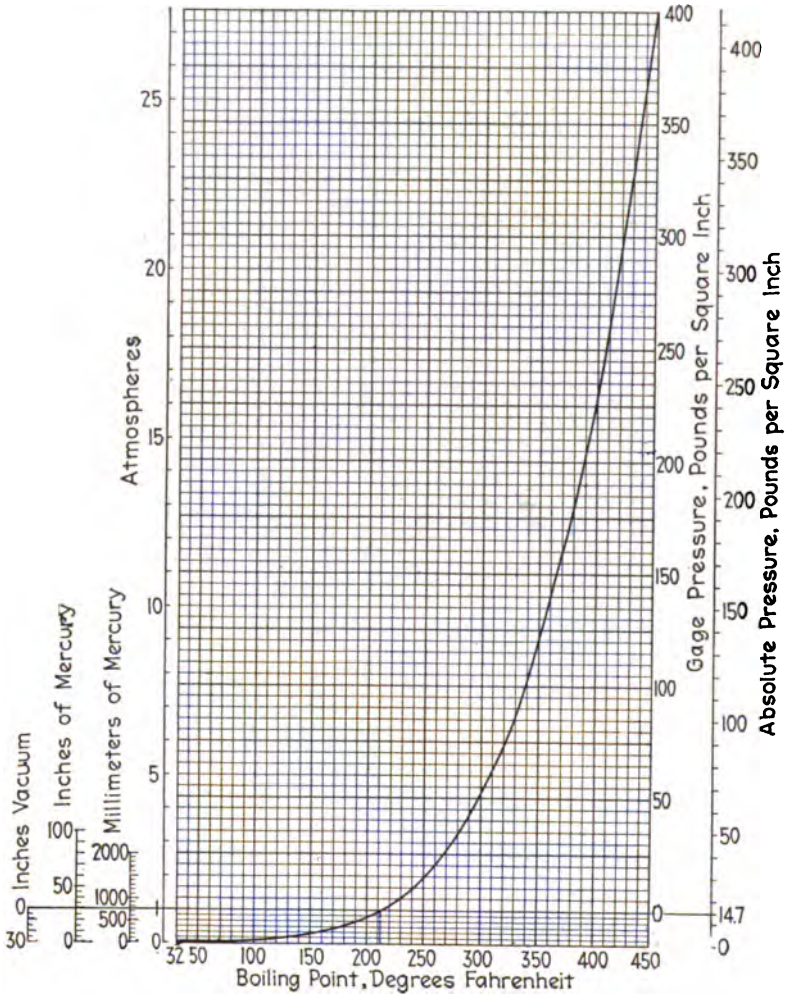

Fig. 220. Variation of Boiling Point of Water with Pressure.

Vapor rises from water at all temperatures, unless the vapor pressure in the space in contact with the water exceeds the saturation pressure. The *boiling point* for any particular pressure is the highest temperature which

can be reached with the water and vapor in contact with it at that pressure, any heat added to the water resulting only in the formation of additional vapor. In the generation of steam for practical purposes, the ebullition is of course much more pronounced than is the formation of vapor at low temperatures, but the phenomenon is similar in its nature.

The boiling point rises and falls with the pressure, so that daily changes in the barometer have a slight effect on the boiling point; these must be allowed for in calibrating thermometers. The boiling point is reduced at points of high elevation and consequent low average barometric pressure.

As long as heat is supplied to a boiler producing steam, the temperature remains at the boiling point corresponding to the momentary pressure, so that the temperature of boiler water in contact with saturated steam can be judged from the pressure. Fig. 220 indicates the boiling point for pressures up to 400 lb. gage. The divisions to the right indicate the corresponding pressures in absolute units, equal to 14.696 plus the gage pressure in pounds per square inch. Absolute pressures in pounds per square inch are converted into "standard atmospheres" by dividing by standard or normal atmospheric pressure (14.696 lb. per sq. in.), which is the pressure that will support a column of mercury 760 mm. (29.921 in.) in height. Roughly, 2 in. of mercury correspond to each pound of pressure.

Pure water boils at 212 deg. under standard atmospheric pressure. For boiling points lower than 212 deg., the pressures are less than atmospheric. They are expressed as absolute pressures, in pounds per square inch or in head of mercury; or by the amount of "vacuum," that is, the difference between the absolute head of mercury and the standard atmospheric head of 29.921 inches. For engineering purposes, the barometer is arranged so that the reading is subtracted from 30 instead of from 29.921, so that standard atmospheric pressure when "referred to a 30-in. barometer" would be recorded as 0.08 in. of vacuum.

Impurities in Water

ALL known substances are more or less soluble in water, so that natural water supplies other than rain water are always contaminated, and contain in solution organic matter or traces of the solids with which they have come in contact. In a boiler, the solids remain behind when steam is produced, and the impurities are precipitated when their maximum concentration is reached, that is, when the volume of water is sufficiently reduced to become saturated with the particular substance. These precipitates cause scale and accompanying troubles, the seriousness of which depends upon the nature and amount of the original impurities.

The characteristics of a boiler feed water may be described by one or more of the following terms: temporary hardness, permanent hardness, alkalinity, causticity, acidity, and dissolved gases—the quantities of the impurities being generally expressed in grains per U. S. gallon (231 cubic inches).

Temporary hardness is the term applied to water containing the bicarbonates of calcium, $Ca(HCO_3)_2$, and magnesium, $Mg(HCO_3)_2$, which are held in solution by an excess of carbon dioxide. Boiling at 212 degrees expells the carbon dioxide. In the one case, calcium carbonate, $CaCO_3$, precipitates out directly. In the other, magnesium monocarbonate is formed. This is soluble and requires further treatment with calcium hydroxide, $Ca(OH)_2$, to reduce to the precipitate $Mg(OH)_2$.

Sodium bicarbonate, $NaHCO_3$, and sodium carbonate, Na_2CO_3, are found in the water in some localities. The former can be converted to the carbonate by the use of calcium hydroxide, $Ca(OH)_2$.

Permanent hardness refers to those waters which contain sulphates, the most common of which is calcium sulphate, $CaSO_4$.

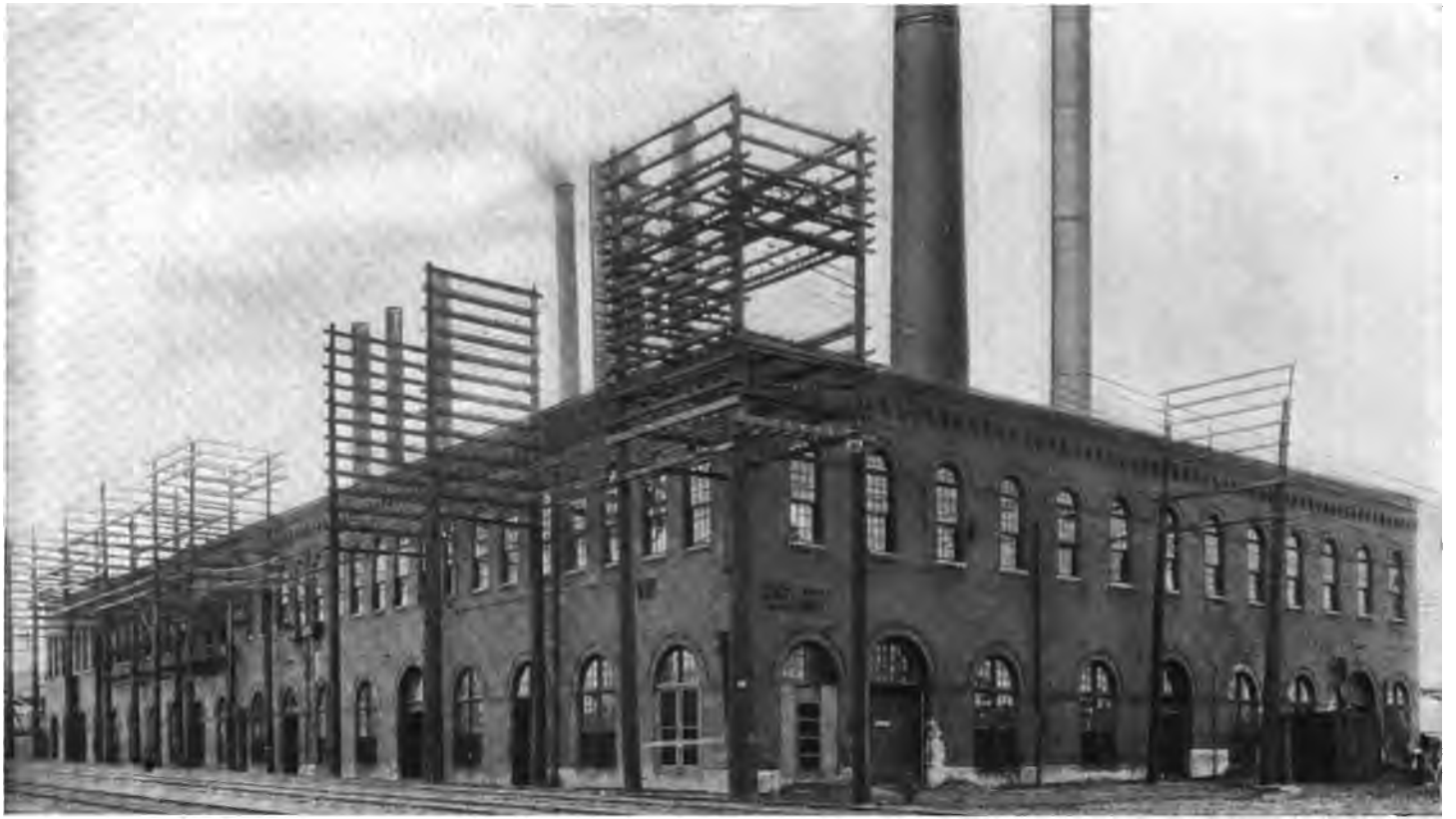

Denver Gas & Electric Co., Denver, Colo. This Company has installed 10,000 H. P. of Heine Boilers and Heine Superheaters.

Solid calcium sulphate, $CaSO_4$, is known as plaster of Paris, or as gypsum when containing a larger amount of water of crystallization. It is highly soluble in water, 138 grains per gallon at 60 deg., and over 30 grains at 300 deg., but when concentrated, deposits a hard scale on the boiler tubes. It can be converted by the use of soda ash (sodium carbonate, Na_2CO_3), forming calcium carbonate, $CaCO_3$, and sodium sulphate, Na_2SO_4. The $CaCO_3$ can be precipitated before the water enters the boiler, but the Na_2SO_4 remains in solution, and does not interfere with boiler operation unless it becomes highly concentrated.

Magnesium sulphate, $MgSO_4$, is decidedly soluble, but tends to react with any calcium salts present, forming hard calcium sulphate scale. Water containing $MgSO_4$ can be treated by introducing calcium hydroxide, $Ca(OH)_2$, forming insoluble magnesium hydroxide, $Mg(OH)_2$, and calcium sulphate, $CaSO_4$, which can be corrected by soda ash.

Iron oxides, FeO, Fe_2O_3 and Fe_3O_4; aluminum oxide or alumina, Al_2O_3; and silicon oxide or silica, Si_2O_3, are scale-forming substances sometimes found in solution.

Alkalinity, a term often used confusedly with temporary hardness, refers more particularly to waters containing impurities which will neutralize acids.

Causticity describes waters that contain hydrates which react to the phenolphthalein indicator. This test is important in connection with waters which may give caustic embrittlement trouble.

Acidity, as the term implies, refers to waters containing free acid. In mining districts the water often contains sulphuric and sulphurous acids. Organic acids are found in swamp water and in water contaminated with sewage. Chlorides and acids present in boiler feed water are neutralized by the reagents used to correct sulphates and carbonates.

Calcium chloride, $CaCl_2$, and magnesium chloride, $MgCl_2$, are found in boiler feed water. The latter is troublesome, as at boiler temperatures it tends to form hydrochloric acid, which causes corrosion.

Solid matter such as mud and silt are often present in boiler water, particularly if the feed water is obtained from rivers and streams.

Dissolved gases, or air entrained or in solution, in boiler feed water is recognized as a source of corrosion.

Water Analysis

TABLE 80 gives some representative analyses of water from various localities.

Methods of Water Analysis. Where it is proposed to prescribe a method of feed water treatment for a boiler plant, it is obvious that water analyses should be carried out in a laboratory equipped especially for the purpose. However, there are a number of simple tests which can be performed in the boiler room with a minimum outlay for apparatus, and which will indicate to the plant engineer the advisability of installing feed water treatment.

Test for Hardness. A 100 cubic centimeter sample of the water for analysis, together with a standard soap solution, is shaken in a flask; the soap solution being added a little at a time until a permanent lather is formed. The number of cubic centimeters of the standard soap solution required to form the permanent foam will be equivalent to the hardness in parts per 100,000, or in degrees "U. S." hardness depending upon the standard to which the soap solution is made up. One degree "U. S." hardness is equivalent to 1 grain of calcium carbonate per U. S. gallon (1 part in 58,349). Standard soap solutions may be obtained from chemical dealers. If this soap test is made on unboiled water, the total hardness will be determined, and if on boiled water, the permanent hardness will be obtained, the difference between the two being the temporary hardness.

Table 80. Water Analyses.
("Boiler Waters" by W. W. Christie)
Grains per U. S. Gallon of 231 Cubic Inches.

Where From	Lime and Magnesia Carbonates	Lime and Magnesia Sulphates	Sodium Chloride	Iron Oxide, Carbonate, Sulphate, etc	Volatile and Organic Matter	Total Solids in Grains
Buffalo, N. Y., Lake Erie.....	5.66	3.32	0.58	.....	0.18	9.74
Pittsburgh, Allegheny River....	0.37	3.78	0.58	0.37	1.50	6.60
Pittsburgh, Monongahela River	1.06	5.12	0.64	0.78	3.20	10.80
Pittsburgh, Pa., artesian well..	23.45	5.71	18.41	1.04	0.82	49.43
Milwaukee, Wisconsin River...	6.23	4.67	1.76	20.14	6.50	39.30
Galveston, Texas, 1.....	13.68	13.52	326.64	Trace	Trace	353.84
Galveston, Texas, 2.....	21.79	29.15	398.99	.....	4.00	453.95
Columbus, Ohio.....	20.76	11.74	7.02	0.58	6.50	46.60
Washington, D. C., city supply.	2.87	3.27	Trace	0.36	2.10	8.60
Baltimore, Md., city supply....	2.77	0.65	Trace	0.10	3.80	7.30
Sioux City, Iowa, city supply..	19.76	1.24	1.17	1.03	4.40	27.60
Los Angeles, Cal., 1.....	10.12	5.84	3.51	2.63	4.10	26.20
Los Angeles, Cal., 2.....	3.72	12.59	.....	0.76	6.00	23.07
Bay City, Mich., Bay.....	8.47	10.36	20.48	1.15	8.74	49.20
Bay City, Mich., River.....	4.84	33.66	126.78	3.00	10.92	179.20
Cincinnati, Ohio, River.....	3.88	0.78	1.79	.....	Trace	6.73
Watertown, Conn.....	1.47	4.51	1.76	Trace	1.78	9.52
Fort Wayne, Ind.....	8.78	6.22	3.51	1.59	10.98	31.08
Wilmington, Del.....	10.04	6.02	4.29	8.48	6.17	35.00
Wichita, Kan.....	14.14	25.91	24.34	.....	2.00	66.39
Springfield, Ill., 1.....	12.99	7.40	1.97	2.19	8.62	33.17
Springfield, Ill., 2.....	5.47	4.31	1.56	4.28	5.83	21.45
Hillsboro, Ill.....	14.56	2.97	2.39	1.63	Trace	21.55
Pueblo, Colo.....	4.32	16.15	1.20	1.97	5.12	28.76
Long Island City, L. I.....	4.0	28.0	16.0	.....	1.0	39.0
Mississippi River above Missouri River.....	8.24	1.02	0.50	.....	5.25	15.01
Mississippi River below mouth of Missouri River.....	10.64	7.41	1.36	1.22	15.86	36.49
Mississippi River at St. Louis Water Works.....	9.64	6.94	1.54	1.57	9.85	29.54
Hudson River above Poughkeepsie, N. Y.....	1.06		0.11	10.76	0.77	12.70
Croton River above Croton Dam, N. Y.....	4.57	..... 0.16	0.40	1.92	0.67	7.72
Croton River water from service pipes in New York City.....	2.36	.....	.....	1.36	.....	3.72
Schuylkill River above Philadelphia, Pa.....	2.16	0.29	0.49	1.30	.....	4.24

Inasmuch as it is the custom to specify the hardness in terms of calcium carbonate per U. S. gallon, the following factors may be used to reduce the quantities of other salts present in a water to a calcium carbonate basis.

Magnesium carbonate	× 1.19	Hardness as calcium carbonate per U. S. gallon.
Magnesium sulphate	× 0.833	
Magnesium chloride	× 1.05	
Calcium sulphate	× 0.735	
Calcium chloride	× 0.901	

A water containing more than 20 grains of calcium carbonate, magnesium carbonate or magnesium chloride per U. S. gallon, or more than 5 grains of calcium or magnesium sulphate per U. S. gallon, is considered undesirable for boiler feed.

Table 81 roughly classifies the desirability of hard waters for boiler use.

Table 81. Classification of Boiler Feed Waters.

$CaCO_3$ $MgCO_3$ $MgCl_2$	$CaSO_4$ $MgSO_4$	Classification
0 to 10 gr.	0 to 2.5 gr.	Very Good
10 to 15 gr.	2.5 to 4.0 gr.	Good.
15 to 20 gr.	4 to 5.0 gr.	Fair.
20 to 30 gr.	5 to 7.5 gr.	Bad.
Over 30 gr.	Over 7.5 gr.	Very Bad.

Alkalinity Test. A 50 cubic centimeter sample of the water to be tested is titrated with a standard solution of sulphuric acid, using methyl orange as an indicator. The degree of alkalinity will be represented by the number of cubic centimeters of acid used to neutralize the solution, as will be indicated when the color of the solution just turns from pink to pale yellow. The required standard sulphuric acid solution can be obtained from chemical dealers.

Causticity Test. A 50 cubic centimeter sample of the water is titrated with a standard solution of sulphuric acid, using phenolphthalein as an indicator. The degree of causticity will be represented by the number of cubic centimeters of acid used to satisfy the reaction, as will be indicated when the solution turns from red to colorless.

The alkalinity, hardness and causticity of a properly treated boiler water, as expressed in grains per U. S. gallon by analysis, should stand in the approximate relation of 6, 5 and 4.

Concentration Test

THE total *concentration of soluble salts* in a boiler fed with softened water can be estimated from the amount of sodium chloride or common salt (NaCl) in solution, which can be determined as follows: After blowing down the boiler, a sample is drawn from the water column, allowed to cool and settle, and 100 cc. of the clear liquid measured off. A drop of phenolphthalein solution is added to the latter, turning it pink; then just sufficient N/20 sulphuric acid (about ¼ per cent strong) from a burette to destroy the pink; and four drops potassium chromate indicator (containing 20 grains per 100 cc.). Silver nitrate solution is then added slowly from another burette, while stirring the sample, until a permanent reddish precipitate is formed. If the silver nitrate solution is of a strength of 4.976 grains $AgNO_3$ per liter, each cubic centimeter of the solution consumed represents 1 grain of sodium chloride per gallon in the boiler water.

Water Treatment

WATER treatment may be roughly classified into three separate divisions, viz: mechanical treatment, thermal treatment and chemical treatment.

Mechanical Treatment. Raw water from rivers very often contains mud and silt in suspension, and if used directly in boilers will cause the deposi-

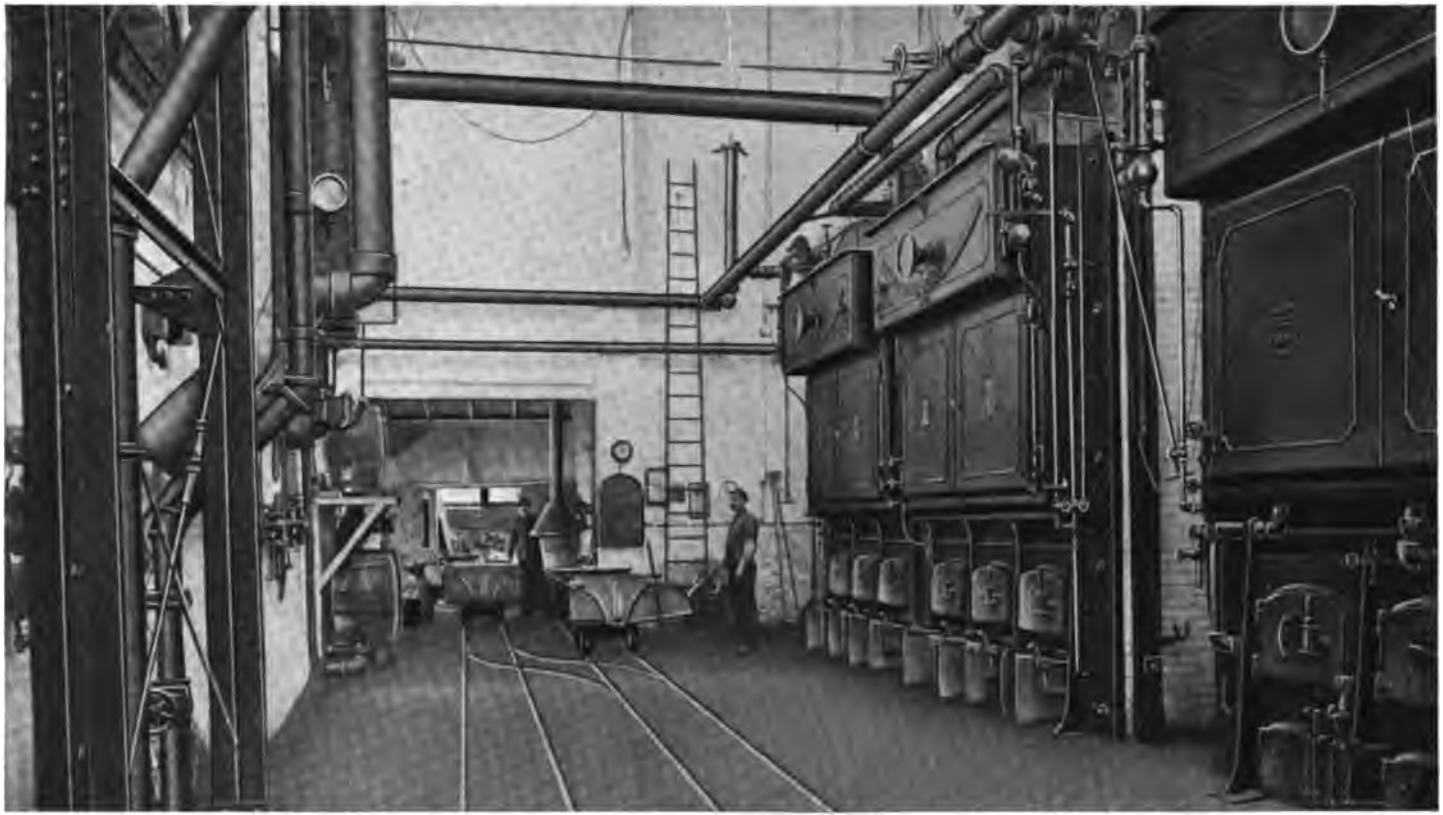

1264 H. P. of Heine Boilers equipped with Heine Superheaters installed in the Danbury & Bethel Gas & Electric Co., Danbury, Conn.

tion of mud on the heating surfaces, resulting in lowered heat transmission, burned tubes and bagged plates. Such solid matter may be removed by settling, filtering or by a combination of these two methods. Heavy mud and sand can be eliminated by allowing the water to stand in settling basins, but suspended matter which will not gravitate must be removed by filtration. Settling basins are generally constructed of concrete. They should be arranged in duplicate so that while one basin is settling the other may be drawn upon as the supply. The size of such basins will depend upon the characteristics of the particular water as regards sedimentation, which may be roughly determined by experimental tests conducted on not less than barrel samples. Filter beds may be constructed of coke, excelsior, crushed stone or sand, and they should be arranged in duplicate to allow for cleaning.

Thermal Treatment. As stated above, the carbonates of lime and magnesia are precipitated by boiling, hence it is obvious that any type of feed water heater will act to a certain extent as a purifier or softener. A description of the various types of heaters and of economizers is given in Chapter 9 on AUXILIARIES.

Chemical Treatment

THE chemical methods used for softening boiler feed water have been practically unchanged for more than 50 years, except for special methods devised to obtain softened *cold* water. Hydrate of lime in the form of lime water, or of milk of lime, is still the most economic means for neutralizing acids, absorbing carbon dioxide, and converting bicarbonates to carbonates or hydrates. Likewise, soda ash is preferred for transforming sulphates, chlorides and nitrates to carbonates. While the chemical methods have not been changed, the engineering appliances for performing the softening process have undergone a radical evolution. The improvements have consisted principally in the proper use of heat for accelerating the chemical reaction, the more accurate feeding of chemical reagents, and the reduction in the labor required in handling chemicals and in removing precipitates.

Two general types of lime-soda processes are used in power plants. In all essential respects, these two, the hot continuous and the cold continuous, processes, are similar. The treatment consists of adding to the raw water softening agents in carefully controlled amounts (which must agree with the composition of the water), mixing these thoroughly within the water, and permitting sufficient time to elapse for the separation of the "sludge" before the water is fed into the boiler. In the first process, the heat increases the rapidity of the chemical reactions, so that the storage space required is less than with the cold continuous process. The hot process expels the air from the water and so reduces corrosion. The cold process is used mainly when cold water is required for some special purpose, such as process work.

Most softeners are of the continuous type. In intermittent softeners, two or more tanks are intermittently filled with raw water and chemicals. The treated water is then drawn off from one tank, while the other is filled and agitated by a revolving paddle so as to insure mixing and to stir up old sludge, which assists in settling out the new precipitate.

The water softening apparatus usually includes some method of mixing the raw water with the chemical reagents; the chemical reactions occur and the impurities are precipitated in a sedimentation tank. Sometimes the raw water is then passed through a filter tank.

Chemical Feed. Chemicals must be fed to a softener accurately in proportion to the amount of water and to the impurities in the water. Otherwise the water will deposit scale, or will contain an excess of unused reagents. In some softeners the raw water flowing to the softener turns a water wheel or operates a tilting bucket. This in turn operates dippers in which the re-

agents are ladled out to be mixed with the raw water. In one design part of the water is separated from the main supply by orifices or weirs, and flows through chambers containing the reagents. In another type, the water displaces the reagent from the tank, at the same time diluting that which remains in the tank. The raw water is sometimes passed through a hydraulic motor, which drives a small chemical pump. The feed can also be controlled by hand, an operator adjusting the chemical pump to deliver the required amount of solution each hour. Results are more satisfactory, however with the automatic feed.

Sedimentation Tanks usually have a conical base, into which the precipitates settle. The hot water and softening reagents are delivered at the top, and settle to the bottom, where the clarified water is withdrawn. In some designs (see Fig. 221) an open feed water heater is placed above the sedimentation tank. The heating chamber of the softener can be divided into two compartments, one for heating the raw water, and the other the pure water supply, the latter passing directly to the boiler feed pump.

Filters. In some installations a separate filter is often dispensed with, the sedimentation tank removing the impurities. Under other conditions a low-pressure sand filter is placed between the sedimentation tank and the boiler feed pump or meter, the water flowing through by gravity. The water delivered should be crystal clear, containing no solids except those in solution, and practically no mud-forming properties. This clarified water will leave no troublesome deposit in the feed lines, pumps or meters, and is especially suitable for boilers operated at high ratings.

In the hot process water softener, Fig. 221, the raw water flows over heating trays, where it is heated by exhaust steam purified of oil to a temperature within a few degrees of the steam itself. The water falls from the trays into the sedimentation tank. Immediately after the water is heated to the boiling point or near it, the softening chemicals are added. In certain waters, they may be added above the heating trays. A precipitate is formed, which settles toward the bottom of the sedimentation tank, traveling much faster than the water. Due to the lower viscosity of hot water, the precipitation is much more rapid than in cold water. As a result the precipitate passes to the conical bottom, from which it is removed by opening the blow-off valve.

A chemical proportioner is used to regulate the proportion of lime and soda ash to the raw water. A thin plate with a restricting orifice, is placed in the raw water line between the regulating valve and heater. A differential pressure is set up on the two sides of the plate, proportional to the square of the flow. This pressure is continually translated to an effective direct pressure on the chemical orifice. The chemical solutions and the raw water each pass through their respective orifices at exactly the same effective pressure, so that the chemicals are always accurately proportioned to the raw water.

The chemical treatment is controlled by drawing a sample of the treated water from time to time and titrating with standardized solutions, the whole operation requiring about ten minutes. The titration readings are obtained and then located upon a chart supplied with the softener, from which the correct chemical treatment is immediately read. Thus the operator sees at a glance what change, if any, is required in the amounts of the chemicals.

Zeolite Process. This process gives a water of zero hardness. The softening agent is an artificial material (permutit) composed largely of sodium compounds, which are exchanged for the incrusting (scale-forming) material of the water. The hard water flows over the permutit which is packed in a cylinder, or is forced through and flows from it with all scale-forming material removed. The softener must be regenerated from time to time by allowing a solution of salt to flow over it, thus restoring its original com-

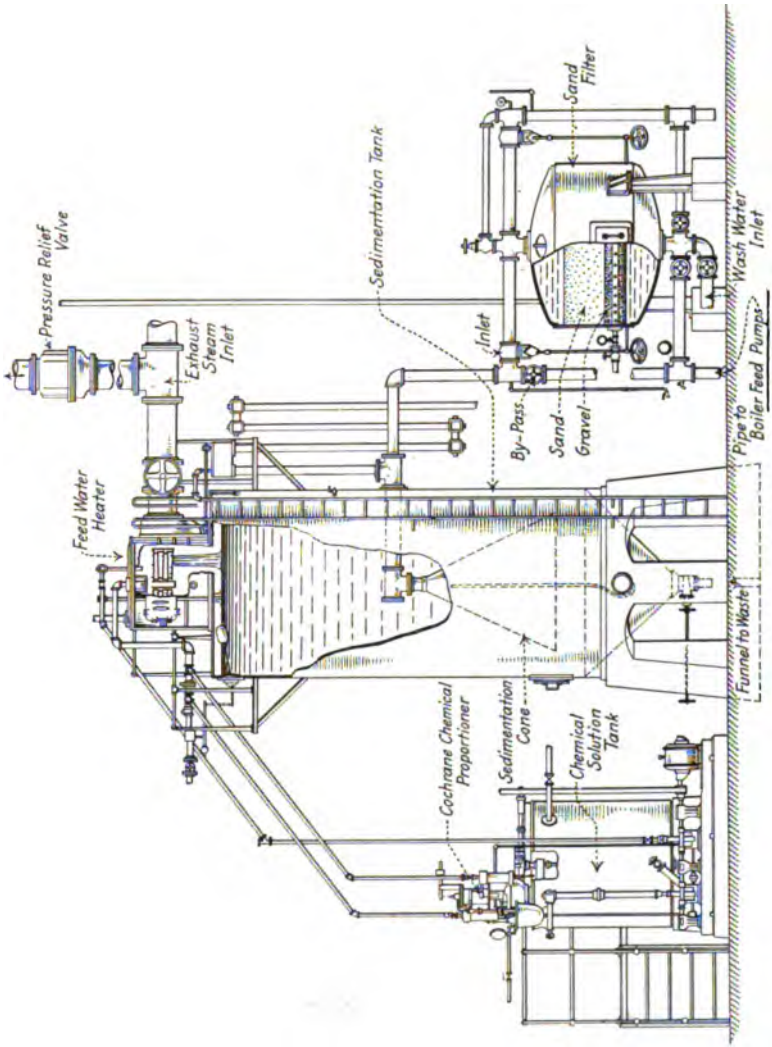

Fig. 221. Sorge-Cochrane Hot Process Water Softener.

position and activity. If the water is of a high degree of temporary or carbonate hardness, the zeolite process introduces a large amount of sodium salt, and foaming may occur. With such waters the zeolite process is modified, an intermittent or continuous equipment being connected through a filter to a zeolite softener. Only lime is used in the tank, the soda compound being secured from the zeolite. The filter is placed between the tank and the zeolite softener to avoid any sludge coating the permutit particles, and thus impairing its efficiency.

Boiler Compounds. Boiler compounds for scale prevention are extensively used in small isolated plants where the expense of a water-softening plant would not be warranted. While it is to be admitted that all chemical reactions necessary to prepare a feed water should preferably take place outside of the boiler itself, there is no doubt but that a compound suitable for particularly bad conditions and correctly used is to be preferred to no treatment at all.

Results of Poor Water on Boiler Operation

PRIMING describes that phenomenon occurring in steam boiler operation, in which water is delivered in belches with the steam.

Foaming of boilers is the production of large quantities of bubbles in the steam space.

If this water is carried out of the boiler, it erodes turbine blades, increases the steam consumption and causes waste of lubricating oil in reciprocating engines, while if the steam passes to a superheater, the water may carry solids to accumulate there as scale.

Foaming and priming is encouraged by the presence of finely divided suspended matter, such as carbonate of lime, or of oil or soluble salts, such as sodium sulphate, either originally present or produced by the action of water-softening chemicals. At maximum capacity, water-tube boilers will stand a concentration of 200 to 300 grains of sodium sulphate per gallon; when foaming begins, the impurities can be removed by the use of the surface and bottom blow-offs. Even though some heat is lost, the removal of sediment and the stopping of foaming increases the efficiency.

Foaming is also encouraged when oil is contained in the feed water introduced into boilers. The oil tends to collect on the tubes, to interfere with heat transmission, and to break down into corrosive acids. Oil carried in the exhaust steam from reciprocating engines or auxiliaries is removed by passing the steam through a separator rather than by skimming or filtering the condensate. The latter method is ineffective when the condensate contains oil in an emulsified or finely-divided state.

Corrosion of boiler plates, tubes and rivets may be almost uniform in effect, in which case the action is difficult to detect, or it may be manifested by visible grooving and pitting.

Corrosion of boiler metal is an electrolytic phenomenon by which a neutral iron atom, in contact with two positive hydrogen ions in the water, takes up their positive charges and becomes subject to oxidation. The hydrogen film formed tends to reduce the speed of the reaction almost to zero unless oxygen from the air or from acid-forming compounds is present in the water. The removal of carbon dioxide or other acids by chemical treatment, and the de-aeration of the water by pre-heating will prevent corrosion.

Electrolysis or galvanic action with its resultant corrosion of the boiler metal, occurs frequently in marine practice, due principally to the presence of salt ($NaCl$) and air in the feed water. Zinc plates are therefore placed in the drum to act as the electro-negative element, thus hindering corrosion. See the description of the Heine Marine Boiler in Chapter 1.

Caustic Embrittlement is a phenomenon which has lately received considerable study, but as yet its action is not definitely established. In certain localities in which boiler waters are of an alkaline character the development of cracks around seams and rivet holes below the water line have caused failures which can not be attributed to faulty materials or design. Investigation of the subject seems to disclose the fact that these failures are due to an embrittlement of the boiler metal. This embrittlement is presumably caused by the metal absorbing nascent hydrogen in such a way as to impair its physical properties. This effect has been decidedly pronounced in boilers using water containing a considerable amount of caustic soda, which has been present either due to over-treatment of the water, or as the result of the decomposition of the sodium bicarbonate $NaHCO_3$ occurring in the raw water.

Scale Formation

SOLUBLE carbonates and sulphates when concentrated in the boiler are precipitated as solids, which tend to accumulate and become baked into hard layers known as "scale," which has a high heat insulating value. As a result, fuel is wasted, and the metal becomes overheated. Expansion and contraction strains follow and may greatly shorten the life of the tubes. Reports from boiler insurance companies show that the majority of boilers inspected are damaged from impure feed water by scale or by corrosion and pitting.

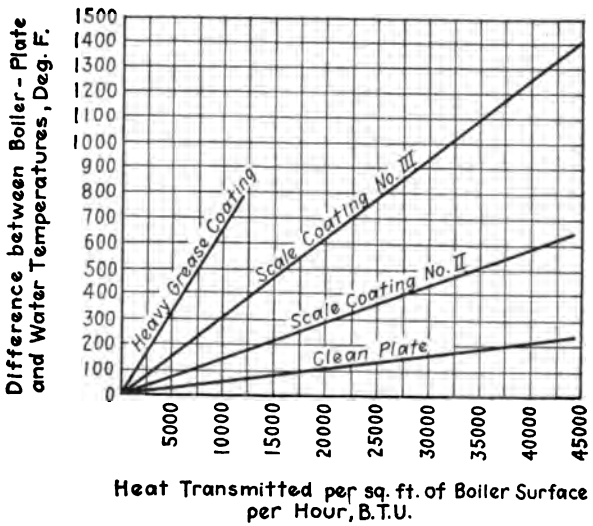

Fig. 222. Effect of Scale on Heat Transmission.

Fig. 222, by *E. Reutlinger,* shows the high temperature difference necessary in operating boilers with variation of heat transmission and of scale thickness. For the clean heating surface, the rate of transmission was 166 B.t.u. per sq. ft. per hour per degree difference between the metal and the water; for the plate coated with Scale No. 2, which was 0.217 in. thick, of conductivity 23.85, the rate was reduced to 67 B.t.u.; and for the plate coated with Scale No. 3, of the same thickness, but of conductivity 8.06, the transmission rate was only 31 B.t.u. For a plate with a heavy grease

coating the rate was 13.5 B.t.u. The necessary temperature differences can be read on the scale to the left, which shows that with scale the metal must be maintained at a temperature several hundred degrees above that of the water, when the boiler is driven at the rates now common.

The heat losses, which may be as great as 10 per cent, the damage to the boilers themselves, the cost of repairs and cleaning; all these emphasize the importance of preventing the formation of scale. Distilled water if used exclusively is prohibitive in cost. The only practical method, when scale-forming matter is present in the water, is to form soluble salts or non-scale producing precipitates. Sodium carbonate (soda ash) can be used for transforming sulphates, chlorides and nitrates to carbonates, while calcium hydroxide (lime water or milk of lime) will correct acids and bicarbonates.

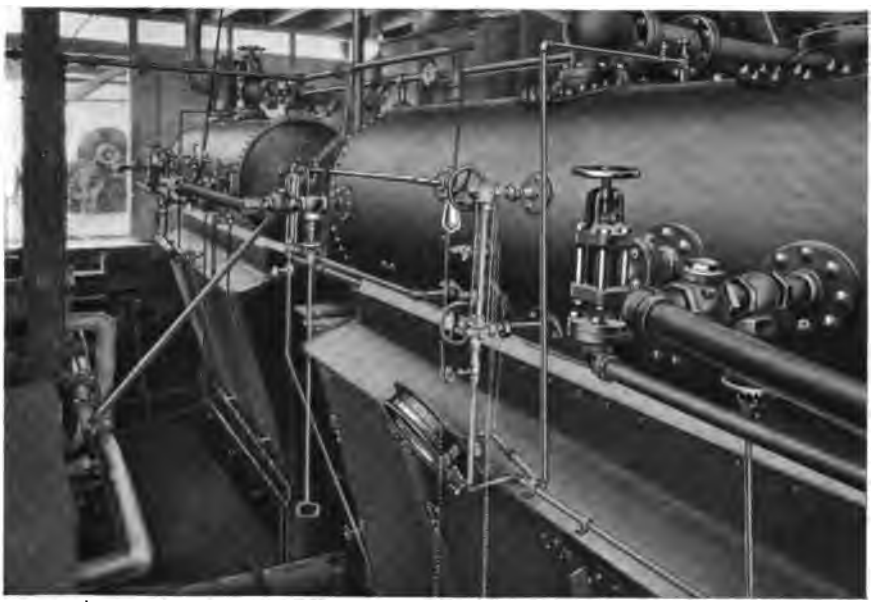

Two 200 H. P. Heine Cross-Drum Marine Boilers on the Dredge-boat "Dixie". Board of Port Commissioners, New Orleans, La.

CHAPTER 15

BOILER TESTING

BOILER testing should not be lightly undertaken by anyone who has not had some training under an experienced testing engineer if reliable results are to be expected. The whole matter should be thoroughly understood both theoretically and practically.

Accurate tests depend very largely upon the care and faithfulness of the observers. It is much easier to make mistakes than is realized by those who are not familiar with practical testing.

Boiler tests are run to compare different boilers, stokers, etc.; different kinds of fuel; different methods of operation, and so forth; but the object of the trial in every instance is to determine capacity, or efficiency in relation to capacity. To more definitely check the results, and to find the cause of unusually low or high efficiency by investigating the losses, the performance of the test and the analysis of the observations become more elaborate.

The Rules for Conducting Evaporative Tests of Boilers, formulated by the American Society of Mechanical Engineers, 29 West 39th Street, New York, should be obtained and studied. All boiler tests should be made and reported in conformity with these rules, so that intelligent comparison with other boiler tests may be made.

A new edition of the A. S. M. E. Code will be available about the time this book is published. If the following directions for conducting boiler tests conflict with the new Rules, the Rules must be followed in preference; but it is not expected that any serious differences will occur. In several instances where it was considered appropriate, parts of the A. S. M. E. Code of 1915 have been copied.

To facilitate understanding the preparations for and making of boiler trials and computing the results, the subject will be treated in two parts. In the first part, the simpler tests will be considered where the capacity only, or the efficiency and capacity, are wanted. In such instances, only the useful work done is measured, and the observations may be restricted to those necessary to attain this end. In the second part, the further observations and calculations necessary to prepare heat balances will be discussed. This work includes finding the amount and cause of the losses as well as the amount of useful work done.

Personnel

THE person conducting the test should have sufficient assistance to enable him to oversee at all times everything connected with the test. He should satisfy himself from time to time that the weighing scales, instruments, etc., are giving correct indications and that all readings are being correctly and punctually recorded. He should continually be on the alert for any change in conditions, such as an unusual demand for steam, stoppage of stokers, fans, feed pumps, and so forth. His assistants should be chosen for their enthusiasm no less than for their ability; and it may prove wiser to abandon and repeat the test rather than continue with an assistant who shows contempt for, or lack of interest in, the proceedings.

840 H. P. of Heine Standard Boilers equipped with McKenzie Chain Grate Stokers installed in the McCormick Building, Chicago, Ill.

Condition of Boiler

THE condition of the boiler and furnace should first be ascertained, and described in the report of the test. If it is desired to demonstrate the value of improved operating conditions, then a test should be run without any change whatever, followed by another before which defective brickwork, baffles, etc., should be repaired, soot and scale removed and the boiler put in generally clean and first-class working condition. If the expected capacity or efficiency is not realized, the heat balance will probably show the cause; and if the necessary observations for calculating a heat balance have not been made, then another test must be run for this purpose. Changes can then be made in whatever direction the losses in the heat balance point, and other tests run until the results expected are realized. Sometimes several tests are run to enable an efficiency curve to be drawn at different loads or to enable comparison to be made of operating under different working conditions.

Duration

THE duration of the test must be sufficient to insure accuracy, and this is governed by the closeness with which the amount of fuel and water involved at start and stop can be ascertained. With oil, gas, etc., there is no store of fuel in the furnace, and four or five hours is generally sufficient. With coal, the amount of fuel in the furnace must be judged at start and stop; and as this is often little better than guesswork, a much longer period is necessary because the error in this judgment may be a noticeable percentage of the total fuel burned.

With mechanical stokers carrying a steady load, 10 hours may be sufficient, but if there is much variation in load this should be greatly increased. With hand firing, the duration should not be less than 8 hours for anthracite or 10 hours for bituminous coal. The trial should be long enough for at least 250 pounds of coal to be burned on each square foot of grate area. If an accurate efficiency test is desired, it should be continued for 24 hours; but for capacity only, 3 or 4 hours is sufficient.

Simple Test Data

IF the capacity only is wanted, the coal need not be weighed or analyzed; but such tests are unusual since they give so little information. Therefore, only those tests will be discussed in which both capacity and efficiency are to be ascertained.

Observations are necessary to obtain the following quantities:

Weight of Feed Water
Weight of Coal
Heat Value of Coal
Temperature of Feed Water
Pressure of Steam
Quality of Steam

Particular accuracy is essential in determining the first three items. If any of these are incorrect, the test is useless.

Weighing Feed Water

THE usual plan for weighing feed water is to have one or more tanks on scales at a high level, discharging by gravity to a single tank below. The lower tank should be larger than either of the others, and have no pipe connections except the suction line to the feed pump. The level of the water in the lower tank should be noted at the commencement of the test

and be brought back to this level at the end. The upper tanks may have overflows, but care must be taken that the overflow water cannot fall into the lower tank. The upper tanks must be large enough so that there is ample time for operating the filling and dumping valves, weighing the water and recording it. A simple rule will prevent mistakes—record immediately the time of dumping each tank; and if there are more than one tank, number them and record the time of dumping in separate columns.

Water Meters are not considered sufficiently accurate or reliable for boiler testing; but in some instances it is almost impossible to avoid using them. They should be carefully calibrated before and after the test by weighing water metered into suitable tanks. When calibrating meters, care must be taken that all readings are from the same part of the cycle of motions operating the counter. As water meters measure volume, the temperature of the water during calibration must be taken, and the weight of water at that temperature used in the calculations. Water meters of the Venturi type, or weirs, are reliable; but should be calibrated. Automatic water-weighers are installed in many large plants, and their readings may be used after calibration and examination as to reliability.

Water Gage. A scale should be mounted close to the boiler gage glass so that the height of the water can be easily read. Note should be made of the position of the scale and then it can be replaced accurately if the glass breaks during the trial. The position of the scale relative to the boiler must be definitely determined, so that the volume of water in the boiler corresponding to any distance on the scale can be computed if necessary, as explained below.

Water gages should not be blown down for at least one hour before starting and stopping, as this changes the water level in the glass, because the temperature and consequently the density of the water in the gage and connecting pipe, is changed.

The feed should be so managed that the water will be at the same level in the boiler at the end of the test as it was at the start. If this is not done, the difference in level must be allowed for by calculating the volume of water in the boiler between the two levels. The weight of water, calculated at the temperature in the boiler, must then be added or deducted as required. The correction for difference in level must always be made in this manner. Pumping in more water or blowing down are not permissible.

Leakage. Care must be taken that all valves and fittings are tight. Blow-off pipes should be blanked off, or disconnected so that any leakage can be seen and measured. Where the feed pipe connects with other boilers, it may not be necessary to blank off these branches if they are provided with two valves with a drain cock or plug between, which may be kept open during the test to insure that no water is passing through leaky valves. Unavoidable leakage from pump stuffing boxes and so forth, must be weighed and deducted.

Boiler leakage may be ascertained by closing all valves, maintaining pressure by means of a very slow fire, and noting the fall of water in the gage glass. Readings of this description should be taken every ten minutes and continued until they show a constant rate.

Leakage from tubes in the feed water heater must be looked for, and any such leakage either measured or cured.

Where drainage from heating systems is automatically returned to the boiler, arrangements must be made to disconnect the system and discharge the condensate elsewhere during the test.

The fundamental condition to keep in mind is that no water shall enter the boiler during the test except that which is being weighed; and that all the water which is weighed enters the boiler and leaves by way of the steam space only.

Weighing Coal

COAL should be weighed only about as fast as required, but the supply must always be ample. In this way the amount on the firing floor can easily be estimated at any time, such as hourly. The same simple rule recommended for feed is desirable here—record immediately the time of dumping each wheelbarrow load.

Never trust to marks or tallies for weighing coal or feed water.

Weighing Scales for coal and water should be examined carefully to see that they swing freely, and should be tested to see that they balance at zero and with standard weights of about the amount at which they will be used. Platform scales are generally most convenient for weighing feed water tanks and wheelbarrows of coal and ash.

Heat Value of Coal

HEAT value of coal is fully treated in Chapter 13 on FUEL, where methods of working down samples and of analysis are described, and representative analyses of fuels are given.

A small sample should be taken from each wheelbarrow of coal before weighing. The amount taken should be about 1 per cent with small anthracite and 2 per cent with bituminous coal. The bulk sample thus obtained should be worked down to about 10 lbs. as described in Chapter 13. Half of this is to be sent to the laboratory in an airtight fruit jar or similar airtight package, and the remainder kept for reference or to replace loss.

The moisture in the coal is an important item and is difficult to get with accuracy.

The moisture in the sample as received at the laboratory can be determined with fair accuracy. But since coal readily absorbs or gives off moisture according to the humidity of the atmosphere, different analysts will often obtain different results from the same sample.

Unless the bulk sample while being collected during the test and while being worked down to a laboratory sample is kept in a cool place, it will not be representative as to moisture. If the sample is collected and worked down in a warm and drafty place, it may possibly lose as much as 2 per cent of water or even more.

Therefore, it is often preferable to determine the moisture during the test, and for this purpose a small pair of scales is required, sensitive to about ¼ oz. when weighing about 20 pounds. A sample of about 20 lbs. (separate from the main bulk sample) is carefully selected to be representative as to moisture, shortly after commencement of the test; and after weighing, it is spread out on a sheet iron tray and exposed to a temperature of about 250° F. for several hours. Care must be taken to protect the sample from strong drafts which might blow away some of the dry dust; and it is advisable to cover the tray with a perforated sheet iron cover, leaving a space of an inch or two between it and the coal. The tray may be placed on a flue or breeching; but it must not be allowed to get too hot or some of the volatile matter will be distilled off, thus giving an erroneous result. It may be necessary to support the tray on bricks or the like to prevent the sample getting too hot. For this determination, the coal should be crushed down so that the largest pieces are not over ¼ inch. The sample is carefully weighed before and after drying for about four hours and then weighed every hour afterwards until two consecutive weighings agree. The loss in weight divided by the weight before drying, multiplied by 100 is the percentage of moisture referred to coal "as fired."

Feed Water Temperature

FEED water temperature must be taken with a thermometer having the scale graduated on the glass stem. There should be several spare thermometers so that breakage will not cause stoppage of the test.

The thermometer is placed in a thermometer-well screwed in the feed pipe. The well should be deep enough to reach to the center of the pipe, or at least well into the flowing water. It should not be in a pocket where the flow is sluggish. The well may be filled with mercury or oil. Response to changes of temperature is not as quick with oil as with mercury; but unless there are unusually rapid changes of temperature, oil is quite good enough.

Recording thermometers are desirable when there is much fluctuation, but they should be checked against the regular indicating thermometer readings.

Thermometers and thermometer-wells are described in Chapter 11 on HEAT, to which reference should be made as to care and methods of use.

Steam Pressure

PRESSURE gages should be tested with a dead-weight tester with both rising and falling pressure, and the case should be tapped gently to see that the mechanism is free. Allowance must be made for head of water in the connecting pipe if there is any.

Recording gages are useful for boiler testing, but their accuracy must be established. The pen or other recording device must be quite free to move with slight pressure fluctuations. The clock error—fast or slow—in relation to the clock or watch used for the test, must be ascertained and recorded.

Ample syphons must be provided to prevent steam reaching the gages.

Care of gages and methods of use are described in Chapter 16 on OPERATION.

Quality of Steam

IF the steam is not superheated, it must be tested for the amount of moisture or entrained water present. For this purpose the throttling calorimeter is used when the moisture does not exceed 4 per cent, and the separating calorimeter for wetter steam.

The Throttling Calorimeter was invented by Prof. C. H. Peabody, and has long been used with complete satisfaction. It is dependent upon the adiabatic expansion of steam through a nozzle. The heat converted into work as velocity of the steam, is returned to the steam as sensible heat when the steam loses its velocity in the expansion chamber. As the total heat in the steam is the same after expansion to atmospheric pressure as it was at boiler pressure, it is obvious that some or all of the moisture present in the high pressure steam will be evaporated. If too much moisture is present, the resulting mixture will have a temperature of 212° F., while with dry steam the temperature will be much higher, showing considerable superheat. From the amount of superheat of the expanded steam, the amount of moisture present in the steam before expansion can be readily calculated.

Taking dry saturated steam of 150 lbs. gage pressure, the total heat per pound is 1196.1 B.t.u. The total heat per pound at atmospheric pressure is 1151.7, and the difference or 44.4 B.t.u. is used in superheating the steam at atmospheric pressure.

If the steam contains 2 per cent of moisture the total heat is, for the steam:

$$0.98 \times 1196.1 = 1172.18$$

for the water:

$$0.02 \times 337.8 = 6.77$$

$$1178.95 \text{ B.t.u.}$$

The total heat in one pound of dry steam at atmospheric pressure and 212° F. is 1151.7, and the difference,

$$1178.95 - 1151.7 = 27.25 \text{ B.t.u.},$$

is available to superheat the steam after the moisture has been evaporated.

As the specific heat of steam is 0.46, the amount of superheat will be:

$$\frac{27.25}{0.46} = 59° \text{ F.}$$

The temperature of the expanded steam will be shown by the thermometer as:

$$212 + 59 = 271° \text{ F.}$$

If a regular or standard instrument is not available for making the test, one may be made up of pipe-fittings as illustrated in Fig. 223.

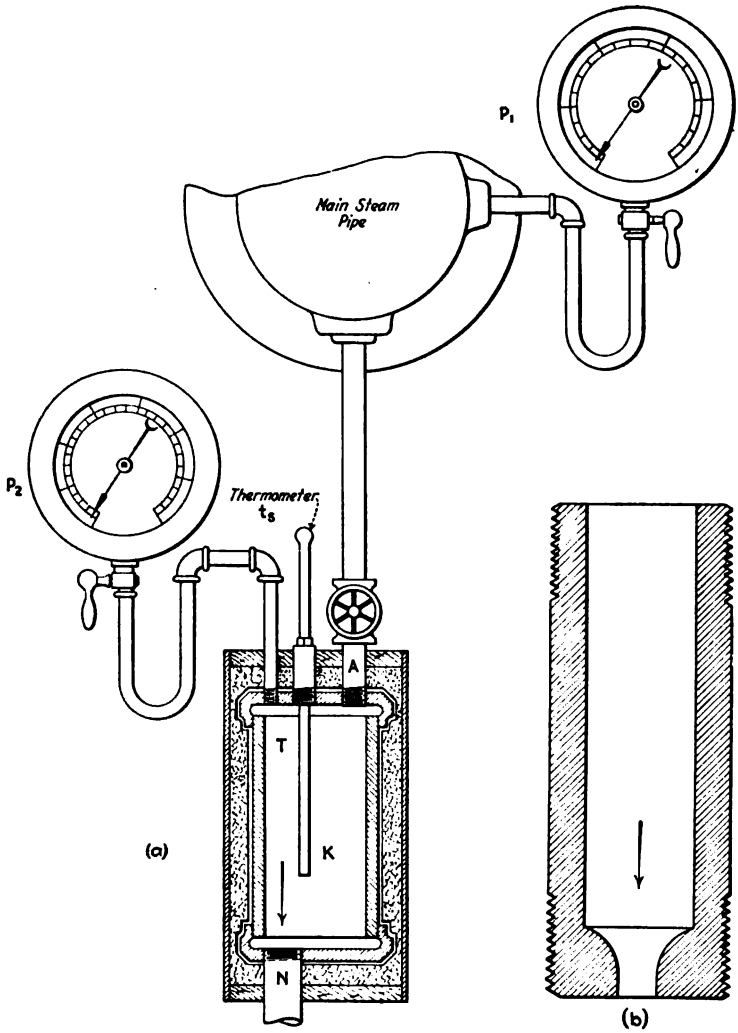

Fig. 223. Throttling Calorimeter.

New York City Custom House containing 1200 H. P. of Heine Standard Boilers. Heine Boilers are also installed in U. S. Custom Houses located in Baltimore, Pittsburgh, Cincinnati, Indianapolis, Cleveland, San Francisco and Kansas City, Mo.

A piece of 4-in. pipe, 10 to 12 in. long, and screwed caps on each end make up the body of the calorimeter. Openings in the end are provided as shown—steam inlet at A usually ½-in. pipe, thermometer and gage connections at T, exhaust outlet at N of at least 1-in. pipe. Care must be taken to offset the pipes A and N. The whole calorimeter is heavily lagged to prevent radiation. The nipple A, through which the steam enters the calorimeter, is made of composition, cut with pipe thread and provided with an orifice for reducing the pressure and gaging the flow of steam. It is shown in detail at (b). The orifice may be made $^5/_{64}$ inch.

Steam passes from the main through the orifice in A, in which it expands and enters the chamber K at atmospheric pressure. If the calorimeter is properly lagged so that no heat is lost by radiation, the heat content of one pound of steam at the lower pressure in the calorimeter will be the same as that at the boiler pressure.

Kent's formula for reducing the observations of the throttling calorimeter is:

$$M = 100 \times \frac{H - 1151.7 - 0.46\ (t_s - 212)}{L} \qquad (63)$$

where:

M = Percentage of moisture in the steam
H = Total heat of the high pressure steam, P_1
t_s = Temperature of the steam in the expansion chamber of the calorimeter
L = Latent heat of the high pressure steam, P_1

With low pressure steam, the outlet N of the calorimeter may be connected to the condenser. In that case the latent heat 1151.7 and the specific heat 0.46 in formula (63) are replaced by those due to the lower pressure in the expansion chamber K.

The Mollier diagram given on page 416 is particularly applicable to the solution of this problem. Its use is illustrated below:

Example 1. Boiler pressure, 100 lb. abs.; calorimeter pressure, 20 lb. abs.; calorimeter temperature, 250 deg. Find the percentage of wetness in the steam.

Locating on the diagram the intersection of the 20-lb. line, and that for the temperature 250 deg., we find the heat content to be 1173 B.t.u. Following this B.t.u. line until it intersects the 100 lb. pressure line, we read the quality as 0.98. The priming will be $(1 - 0.98)\ 100 = 2$ per cent.

The range of use of the calorimeter depends upon the heat available to superheat the steam. This in turn depends upon the boiler pressure and the drop in pressure. To get sufficient accuracy, not less than 10 deg. superheat in the calorimeter is necessary.

The following is taken from the "Description of Steam Calorimeters" in the A. S. M. E. 1915 Code.

"The percentage of moisture is determined by observing the number of degrees of cooling that the thermometer in the low-pressure steam shows below the 'normal' reading for dry steam, and dividing that number by the 'constant' number of degrees representing 1 per cent of moisture.

"To determine the 'normal' reading of the low-pressure thermometer corresponding to dry steam, the instrument should be attached to a horizontal steam pipe in such a way that the sampling nozzle projects upwards to near the top of the pipe, there being no perforations and the steam entering through the open top of the nozzle. The test should be made when the steam in the pipe is in a quiescent state, and when the steam pressure is maintained constantly at the point observed on the main trial. If the steam pressure falls during the time when the observations are being made, the test should be continued long enough to obtain the effect of an equivalent rise of pressure.

To find the 'constant' for 1 per cent of moisture divide the latent heat of the steam supplied to the calorimeter at the observed pressure or temperature by the specific heat of superheated steam at atmospheric pressure (0.46) and divide the quotient by 100.

"Finally ascertain the percentage of moisture by dividing the number of degrees of cooling by the constant, as above noted.

"To determine the quantity of steam used by the calorimeter it is usually sufficient to calculate the quantity from the area of the orifice and the absolute pressure, using Napier's formula for the number of lb. which passes through per second; that is, absolute pressure in lb. per sq. in. divided by 70 and multiplied by the area of orifice in sq. in. To determine the quantity by actual test, a steam hose may be attached to the outlet of the calorimeter, and carried to a barrel of water on platform scales. The amount of steam condensed in a certain time is determined, and thereby the quantity discharged per hour."

Separating Calorimeter. When the percentage of moisture is too large for the throttling calorimeter, the separating calorimeter, Fig. 224, is used. In this the moisture is mechanically separated, just as it is in the ordinary power-plant separator. Steam enters as indicated, passes down into the perforated basin from which dry steam escapes through small openings near the top, while the moisture is deposited in the bottom of the calorimeter. The dry steam passes through the jacket surrounding the water, from which

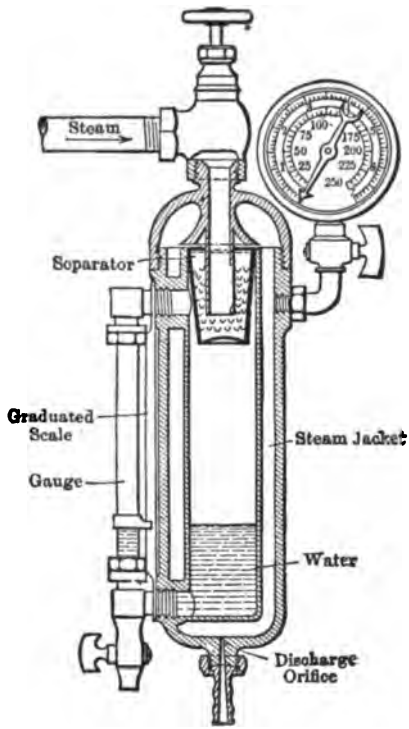

Fig. 224. Carpenter Separating Calorimeter.

it is discharged through an orifice. This orifice can be used to measure the dry steam, or the discharge can be led to a condenser and the condensed steam weighed. The quantity of water separated in the reservoir can be determined by reading the special scale provided on the gage glass. The weight of water collected divided by the sum of the weights of this water and of the dry steam for the same period of time, gives a result which is the percentage of wetness. In practice the results obtained with the separating calorimeter are only approximately correct, because of the difficulty of drawing a representative sample from the pipe line.

The calorimeter connection with the steam main, from which the sample of steam to be tested is taken, should be made according to A. S. M. E. recommendations. The ½-in. pipe should extend across the main to within ½-in. of the opposite side, the end being plugged. Around the circumference of this sample pipe should be drilled not less than twenty ⅛-in. holes, spaced irregularly. The nearest hole should be at least ½-in. from the side of the main.

Superheated Steam. Use a gas filled thermometer with enlarged bore at the upper end. The thermometer well should contain mercury or soft solder, and the immersed portion of the well should be fluted to cause quicker response to fluctuations of temperature.

Where extreme accuracy is essential, make the stem correction as described on p. 373.

Steam Tables

THE report of the test should state which steam tables the calculations were based on. Goodenough's tables are given on page 424 and are used throughout this book. If Marks and Davis's or Peabody's tables are used, care must be taken to adopt their values as constants in the formulas where they occur, such as in finding the factor of evaporation.

Starting and Stopping

SPECIAL consideration of the methods to be used in starting and stopping the test is necessary. These must be well thought out beforehand, and be suitable for the particular conditions to be encountered. Sufficient error to render the test useless is easily introduced, unless the proper observations are made quickly and simultaneously and immediately recorded.

With hand fired boilers, in order that the fire may be as nearly as possible in the same condition at start and at stop, the fire must be burned low and cleaned both before the beginning and before the end of the test, so that a clean fire is left on the grate in each instance. Thin fires are more easily judged than thick ones. Bituminous coal fires should be 2 to 4 in. thick at start and stop, and small anthracite fires may be 1 to 2 inches. Colored spectacles should be used in examining fires, particularly so with forced draft and soft coal, for little is to be seen, much less judged with any accuracy, without them.

To start the test, note quickly the condition of the fire, the water level in the gage glass, the water level in the lower or suction tank of the feed water tanks, and the time. Record these observations with the time as the start of the test. Record the first steam pressure reading and the first feed water temperature reading immediately afterwards.

To end the test, watch the fire when and after being cleaned, and as soon as it is in the same condition as at the start, note the water level in the gage glass, the water level in the lower feed water tank (preferably stopping the feed pump) and the time, and record these as the end of the test.

2590 H. P. installation of Heine Standard Boilers equipped with Green Chain Grate Stokers in the Burnside Shops of the Illinois Central Railroad, Chicago, Ill.

If there is any difference in the gage glass level at start and stop, allowance is to be made later by calculation. If the water level is low in the lower feed water tank, weigh the amount necessary to make up the deficiency and add it to the total water fed; and if the water level is high, bale out and weigh the excess and deduct it from the total.

When a water meter is used, the procedure at both start and stop is to note the condition of the fire, the water level in the gage glass, the reading of the meter, and the time. Record these observations with the time as the starting and stopping times respectively.

Weigh back any excess coal left on the firing floor and deduct it from the total.

In a plant containing several boilers where it is not practicable to clean them simultaneously, the fires should be cleaned one after the other as rapidly as may be, and each one after cleaning charged with enough coal to maintain a thin fire in good working condition. After the last fire is cleaned and in working condition, burn all the fires low (say 4 to 6 in.), note quickly the thickness of each, also the water levels, steam pressure, and time, which last is taken as the starting time. Likewise when the time arrives for closing the test, the fires should be quickly cleaned one by one, and when this work is completed they should all be burned low the same as at the start, and the various final observations made as noted.

In the case of a large boiler having several furnace doors requiring the fire to be cleaned in sections one after the other, the above directions pertaining to starting and stopping in a plant of several boilers may be followed.

Mechanical Stokers. To obtain the desired equality of condition of the fire when a mechanical stoker other than a chain grate is used, the procedure should be modified where practicable as follows:

Regulate the coal feed so as to burn the fire to the low condition required for cleaning. Shut off the coal-feeding mechanism and fill the hoppers level full. Clean the ash or dump plate, note quickly the depth and condition of the coal on the grate, the water level, the steam pressure, and the time, and record the latter as the starting time. Then start the coal-feeding mechanism, clean the ashpit, and proceed with the regular work of the test.

When the time arrives for the close of the test, shut off the coal-feeding mechanism, fill the hoppers and burn the fire to the same low point as at the beginning. When this condition is reached, note the water level, the steam pressure, and the time, and record the latter as the stopping time. Finally clean the ash plate and haul the ashes.

In the case of chain grate stokers, the desired operating conditions should be maintained for half an hour before starting a test and for a like period before its close, the height of stoker gate or throat plate and the speed of the grate being the same during both of these periods.

Report of Simple Test

Observations should be made punctually and immediately recorded. When it is essential that a number of instruments be read simultaneously, there should be an observer at each one. A signal should be given, such as by a bell or whistle, when the readings are to be taken.

The frequency of taking the readings of steam pressure and feed water temperature depends upon the extent and rapidity of the fluctuations. Usually, half hourly observations are sufficient; but if there is considerable variation, readings should be taken every 15 minutes.

Records. The observations should be recorded on separate sheets so that different observers are not hampered by having to write in the same book. The plan of the test must be arranged beforehand and the duties of each

observer clearly defined. In important and complicated tests, one or more preliminary runs as rehearsals are very desirable.

Make a note of every incident connected with the test together with the time of its occurrence, however unimportant or unnecessary it may appear at the time.

The record sheets should either be printed or made up by hand before the test, and the original sheets should be kept, no matter how dirty they may be. Each record sheet should be dated and signed by the observer. As soon as possible after completing the test or even during its progress, the whole of the observations and remarks should be written up in a log book having pages not less than letter paper size—11 in. by 8½ inch.

It is desirable that the records show the coal and water consumption each hour. This is easily done by allowing for the coal on the firing floor and for the height of the water in the gage glass at the end of each hour. But this is only incidental and the orderly procedure of weighing full tanks of water and of the regular quantity of coal must not be disturbed.

Chart. Where there are fluctuations of load, steam pressure and so forth, it is advisable to plot a chart of the test. This may well be done while the test is in progress. Unlooked for conditions are shown at a glance. Fig. 225 is a chart reproduced from the A. S. M. E. 1915 Code.

The form of report shown in Table 82 is suitable for the simpler kind of test which has been described. Items may be added to record other observations if desired, such as draft in uptake and at other points, weight of water actually evaporated per hour, smoke, etc.

Sketches, photographs and descriptions should be attached, giving any particular information such as condition of boiler and furnace, arrangement of baffles and so forth.

Table 82. Evaporative Test.

Description of Boiler.....Rated H. P.....
Located at.....
Date of Test.....Duration.....Conducted by.....
Coal, Kind.....size.....cost per.....lb., $.....
Grate, Type.....area.....draft.....
Heating surface, boiler.....superheater.....economizer.....

(1) Steam pressure, lb. per sq. in.....
(2) Percentage of moisture in steam.....or superheat, °F.....
(3) Factor of correction for quality of steam.....
(4) Feed water temperature, °F.....
(5) Factor of evaporation.....
(6) Equivalent evaporation per hour, from and at 212° F., lb.....
(7) Equivalent evaporation per hour, from and at 212° F. per sq. ft. of heating surface, lb.....
(8) Percentage of rated capacity developed.....
(9) Percentage of moisture in coal.....
(10) Dry coal per hour, lb.....
(11) Dry coal per sq. ft. of grate surface per hour, lb.....
(12) Equivalent evaporation from and at 212° F. per lb. of dry coal, lb.....
(13) Heating value per lb. of dry coal, B.t.u.....
(14) Efficiency, per cent.....

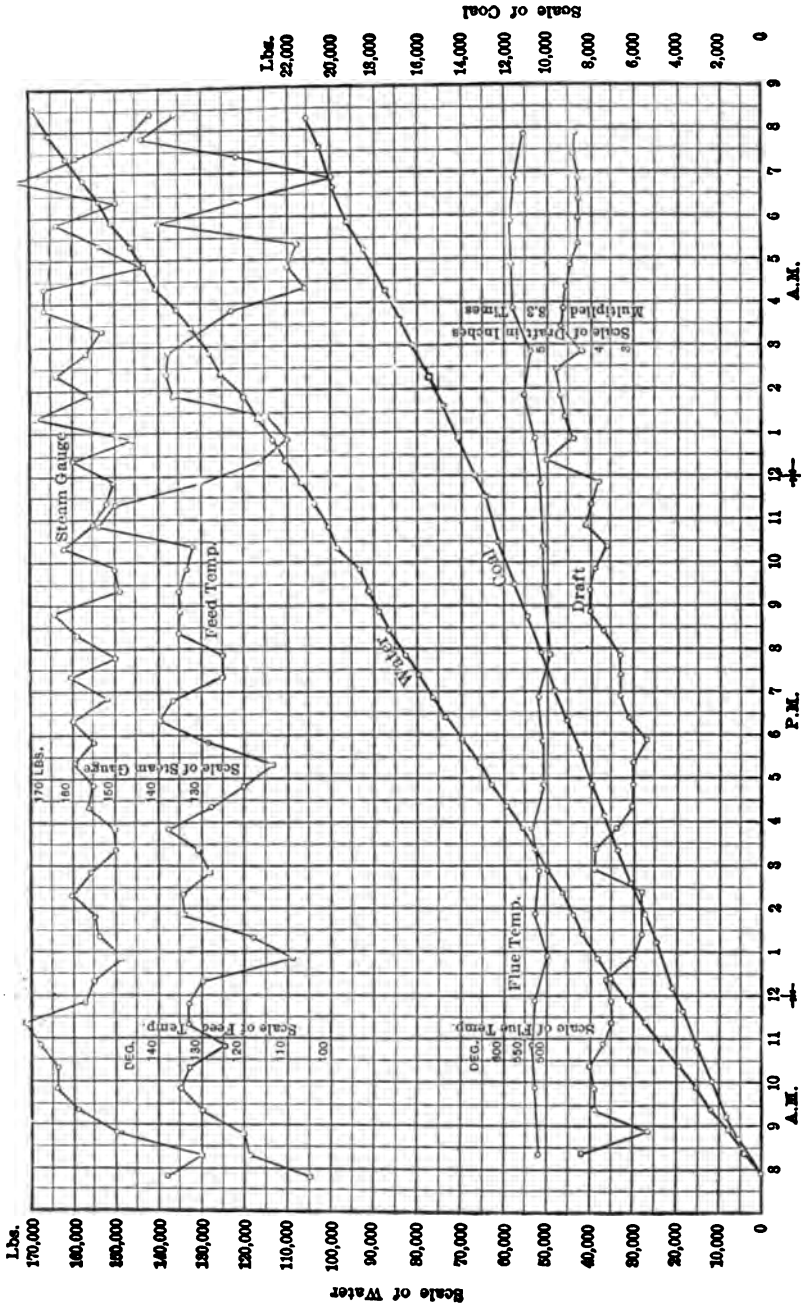

Fig. 225. Chart showing Log of Boiler Test.

Calculation of Simple Test

THE heading of the report should be filled in first. No explanation of this part is necessary, except to mention that the grate area is the horizontal area between furnace walls, so that the grate area is the same whether the grate is horizontal or sloping. In the following discussion, the numbers at the commencement of paragraphs are those of the items in Table 82.

(1) This is the average of the observations.

(2) Methods of finding the percentage of moisture in saturated steam have been discussed. With superheated steam, the temperature of saturated steam due to the pressure is found from the Steam Tables in Chapter 12 on STEAM, and deducted from the temperature of the superheated steam, giving the number of degrees of superheat.

(3) When the percentage of moisture is less than 2, it is sufficient merely to deduct the percentage from the weight of water fed, in which case the factor of correction for quality is:

$$1 - \frac{\text{per cent moisture}}{100} \qquad (64)$$

When the percentage is greater than 2, or if extreme accuracy is required, the factor of correction is:

$$1 - M\,\frac{H - q_1}{H - q} \qquad (65)$$

in which M is the proportion of moisture, H the total heat of 1 lb. of saturated steam, q_1 the heat in water at the temperature of saturated steam, and q the heat in water at the feed temperature.

When the steam is superheated, there is no factor of correction.

(4) This is the average of the observations. If there is an economizer and the test is of the boiler and economizer together, then this item is the temperature of the feed water entering the economizer. If the test is of the boiler only, this item is the temperature of the feed water entering the boiler, whether there is an economizer or not.

(5) The factor of evaporation may be described as the amount of heat transferred to each pound of feed water passed through the boiler, divided by the heat necessary to evaporate a pound of water from and at 212°. Therefore:

$$F = \frac{H - q}{971.7} \qquad (66)$$

where:

F = Factor of evaporation
H = Total heat of steam at boiler pressure or at pressure and temperature of superheated steam
q = Total heat in water at feed temperature.

No allowance is to be made for moisture in the steam, as this is taken care of in item 6.

(6) The total weight of feed water is first corrected for differences in level of boiler water gage and in feed suction tank if necessary. If there is no superheater, this total weight is multiplied by item 3 to find the total water actually evaporated. This is multiplied by item 5 to find the total equivalent evaporation from and at 212° F., and divided by the duration of the test in hours.

(7) This is item 6 divided by the actual water heating surface.

(8) Item 6 divided by 34.5 gives the B.H.P. developed. The B.H.P. developed, divided by the rated H.P. of the boiler gives the percentage of the rated H.P. developed.

(9) This does not require further explanation.

(10) The total coal weighed out is first corrected for differences in quantity in furnace at start and stop if necessary, and for any coal remaining unused at end of test. The total weight of moisture as found by item 9 is deducted, leaving the total weight of dry coal. Dividing this by the duration of the test in hours gives the dry coal per hour.

(11) This is item 10 divided by the grate area.

(12) This is item 6 divided by item 10.

(13) This is entered from the laboratory report.

(14) This is item 12 multiplied by 971.7 and by 100, and divided by item 13.

Complete Test Data

A COMPLETE evaporative test includes several other observations in addition to those already described. These observations are directed mainly to finding the parasitic losses by means of a heat balance. To begin with, an ultimate analysis of the coal will be required, and this will be stated as in item 25 of Table 86.

Temperature of Exit Gases may be taken with a gas filled thermometer. To get the average in a large flue, specially long thermometers are made to reach to the center or at least well into the gas current. An oil pot, or large thermometer-well may be arranged to hang into the flue, and the thermometer will then have to be lifted out of the oil each time it is read.

Fig. 226. Portable Indicating Instrument of Wm. H. Bristol Electric Pyrometer.

Electric pyrometers of the thermo-couple type are the handiest instruments for the purpose. The portable instrument shown in Fig. 226 is most convenient, for it may be connected to several "hot ends."

Various thermometers and pyrometers are described in Chapter 11 on HEAT.

2000 H. P. Heine Standard Boilers in the Sumitomo Besshi Mines, Japan.

The temperature of the air entering the ashpit, item 16 of Table 86, may be taken as that of the boiler room in natural draft plants. With forced draft, the temperature should be taken near the fan inlet. *Inexperienced observers should be warned against the danger of accident unless the fan inlet is screened.* If air heaters are installed, the temperature should be taken both entering the heater and entering the ashpit, and so reported.

Particular care must be taken that the thermometer is not exposed to radiation from nearby hot surfaces.

Flue Gas Analysis. The average composition should be represented in the samples collected. For use in computing heat balances, the sample should be taken so as to include air leakage into the setting, and the sampling tube should be placed in the uptake. Even in good commercial settings, the CO_2 may drop as much as 3 or 4 per cent between the combustion chamber and the stack. This inleakage may not be excessive, but nevertheless the conditions should be known. The efficiency of firing operations can be studied by analyzing "grab" samples taken from the furnace or from among the tubes, and plotting the results as shown on page 575.

Perforated sampling tubes are sometimes used, but a plain, open-end pipe, drawing from the center of the flue, is generally favored. A radial "spider" is also recommended by the *Bureau of Mines.* Fig. 227 shows a sampling tube inserted in a Heine boiler. The tube should be placed at least 3 ft. below the damper and 1 ft. above the steam drum, through a

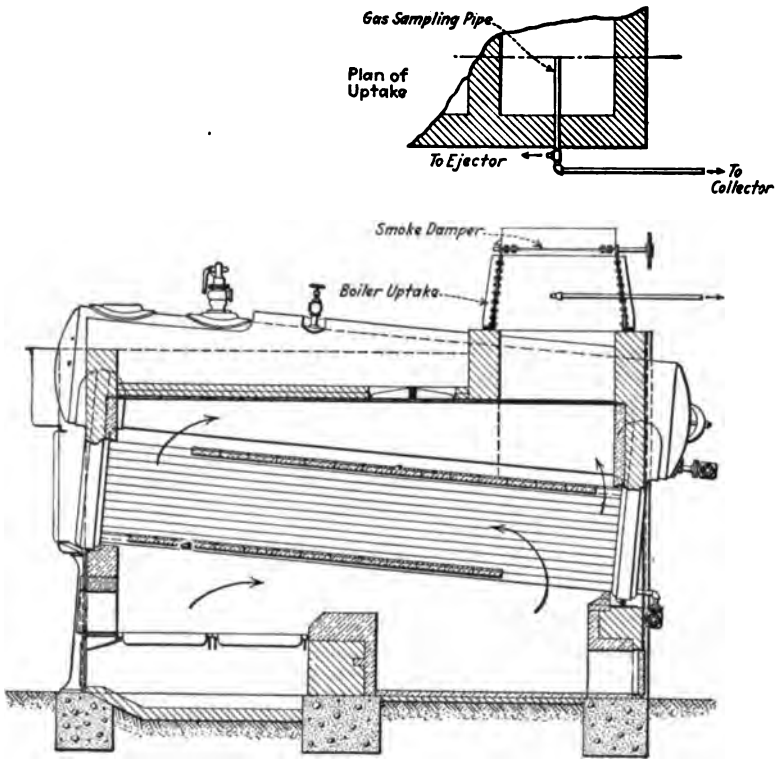

Fig. 227. Method of Inserting Sampling Tube.

hole drilled in the brick wall and closed with asbestos packing. By connecting an ejector to the pipe, a small stream of gas is constantly drawn out with the steam or water, and a representative sample can be drawn at any time from the current moving toward the ejector. A continuous or average sample representing one to six hours operation can be secured by the arrangement shown in Fig. 228. The upper 2-gal. bottle, initially full of

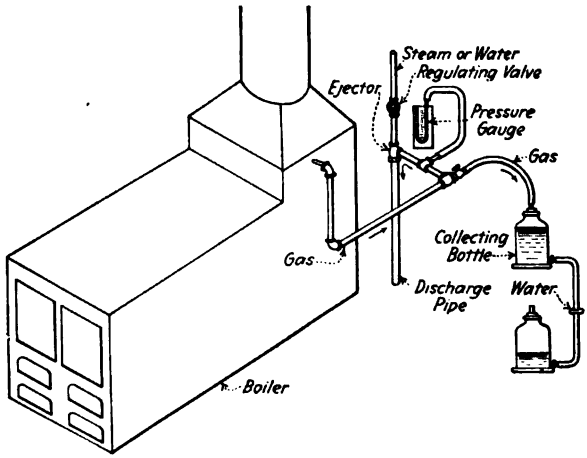

Fig. 228. Arrangement for obtaining Continuous or Average Sample of Flue Gas.

water, is slowly emptied, drawing in the flue gas. Such a sample produces an average upon the basis of time, rather than load, and is reasonably representative if the difference between the two water levels is 2 ft. or more, so as to maintain the effective head nearly uniform. If the sample is to stand over the water for more than two hours, or if it is subject to much variation in CO_2 content, it should be collected over a saturated brine solution (one-fourth salt by weight) to minimize absorption by the liquid. All joints in the pipe connections should be tight and coated with asphaltum paint. The line can be cleaned more easily if crosses having removable plugs are used instead of elbows, but the liability of leakage is increased.

A water-cooled or quartz tube is desirable for the part of the sampler extending into the gas current, although a ⅛ to ¼-in. metal tube is satisfactory. For securing "grab" samples for combustion control, a ⅛ in. bore copper tube is preferable. It has less capacity for the same nominal size, and two or three rapid fillings of the burette suffice to clear it of air. It can be easily inserted through cleaning holes, so that samples can be taken from different points in the boiler.

Gas Analysis Apparatus. For determining the composition of flue gases in ordinary boiler work one of the simplest and most convenient instruments is the Orsat apparatus. This instrument can easily be used by the person conducting a test, or by some assistant whom he directs.

Orsat Apparatus. The principal constituents of flue gas (CO_2, O_2 and CO) can be measured in the Orsat apparatus by passing a sample of the gas successively into three solutions, each having a high absorptive capacity for one of the constituent gases.

The apparatus, Fig. 229, consists of a measuring burette, leveling bottle, three absorption pipettes and the connections. The burette is filled with water by raising the leveling bottle. The flue gas is then admitted to the header,

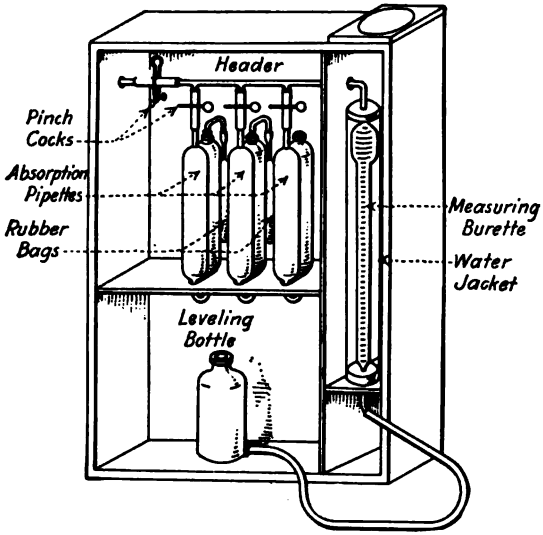

Fig. 229. Orsat Apparatus for Analyzing Flue Gas.

drawn into the burette, and rejected to the atmosphere. This is repeated several times until the water is saturated with CO_2 and the system is filled with gas. A 100 cc. sample is then taken into the burette by lowering the bottle until the surface of the water in the burette reaches the lowest graduation when it is at the same level as the water in the bottle, thus subjecting the sample to atmospheric pressure. Next comes the actual measuring.

The gas supply is shut off, and the sample forced into the right-hand pipette, where the CO_2 is absorbed by a solution of KOH, caustic potash. The sample is passed back and forth several times until its volume ceases to decrease, when the solution is drawn to its original level in the upper neck of the pipette and isolated again. The residual gas is then measured under atmospheric pressure, that is, with the water in the bottle and in the burette at the same level, and the loss in volume represents the percentage of CO_2 in the original sample.

The connection is now opened into the second pipette, which contains an alkaline solution of pyrogallic acid. The oxygen in the remainder of the sample is absorbed and the percentage determined in the same manner as was that of the CO_2.

The third pipette contains an ammoniacal solution of cuprous chloride, Cu_2Cl_2, which absorbs the CO, and the loss in volume in this third operation gives the percentage of CO. The cuprous chloride absorbs both CO and oxygen, and would thus give an erroneous indication if all free oxygen was not first removed. The oxygen is determined primarily in order to ascertain the CO content. The analysis for O_2 and CO is not ordinarily made unless the presence of CO is suspected, as when the CO_2 percentage is high and the supply of air may be deficient.

To prevent sudden temperature changes while the sample is being examined, the measuring burette is encased in a water jacket. The front legs of the pipettes are filled with small glass tubing, to afford large contact surface between the solutions and the gas, while the rear legs of the O_2 and CO pipettes are closed to prevent contact of the solution with the air.

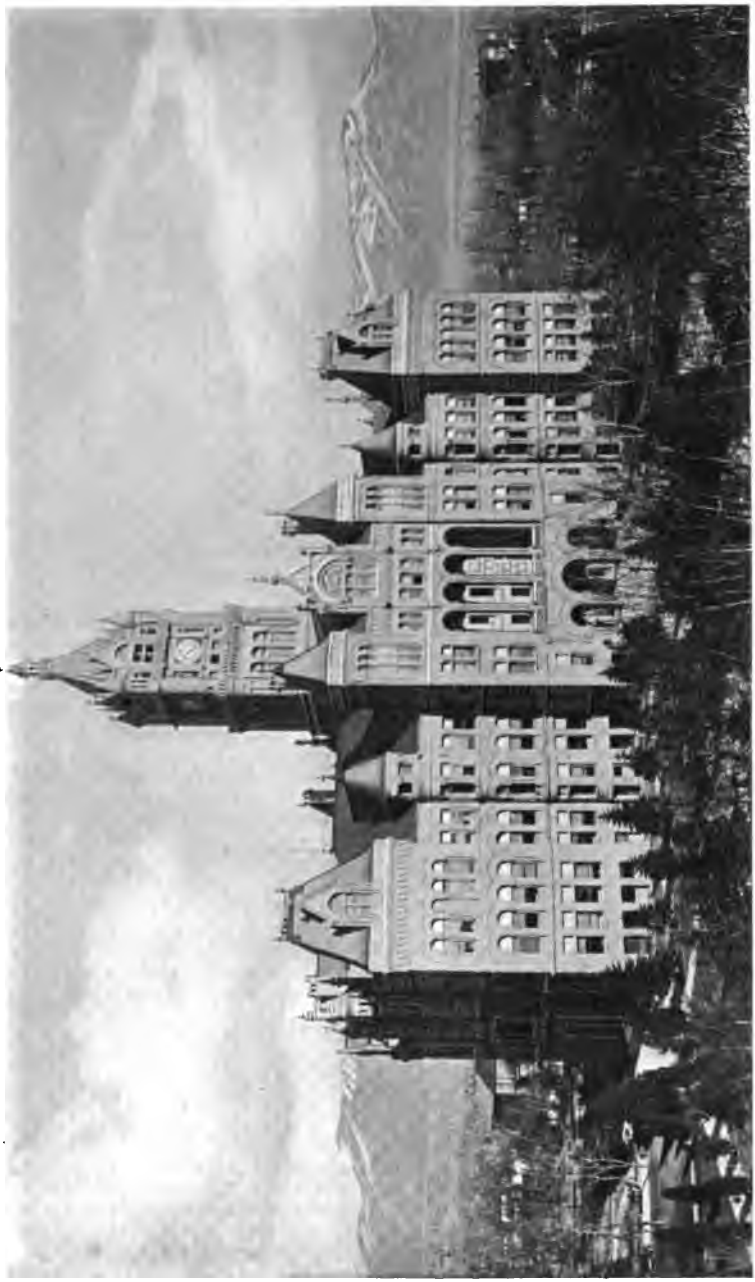

City and County Building, Salt Lake City, Utah, equipped with Heine Standard Boilers.

This is not necessary with the KOH solution used for the CO_2 measurements.

Orsat connections consist either of rubber tubings closed by pinch cocks, or of glass tubing with ground-glass cocks. The latter system is considered more reliable and operates satisfactorily when the cocks are clean and well lubricated.

If momentary samples are obtained, the analyses should be made as frequently as possible, say every 15 to 30 minutes, depending on the skill of the operator, noting the furnace and firing conditions at the time the sample is drawn. If the sample drawn is a continuous one, the intervals may be made longer.

For determining the hydrogen and other unburned combustible matter in the flue gases, and for general gas analysis, the Hempel apparatus, or some modification thereof, is required. Work of this kind should be entrusted to a person who is familiar with all phases of the subject.

The Hempel Apparatus works on the same principle as the simple form of Orsat apparatus described, so far as the latter is applicable, except that the absorption may be hastened by shaking the pipettes bodily, bringing the chemical into most intimate contact with the gas. It is less portable and in some particulars it requires more careful manipulation than the Orsat, while for general analysis it is not adapted unless used in a well equipped chemical laboratory. The absorption pipettes are made in sets which are shaped in the form of globes, and a number of independent sets are required for the treatment of the different constituent gases. A simple pipette of the Hempel type is shown in Fig. 230.

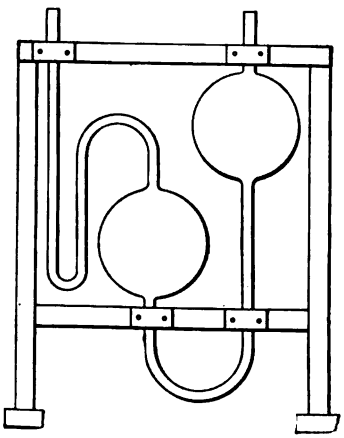

Fig. 230. Hempel Pipette.

The method of carrying on an analysis with the Hempel apparatus is as follows:

A sample of gas measuring 100 cc. is drawn into the burette, and then transferred to the first pipette, which contains potassium hydrate dissolved in twice its weight of water. This solution absorbs carbon dioxide (CO_2). The gas is then passed into the second pipette, containing saturated bromine water, which absorbs the heavy hydrocarbons (C_2H_4); then into the third pipette, containing a solution of pyrogallic acid and potassium hydrate in the

proportion of 5 grams of acid to 100 cc. of hydrate, which absorbs oxygen (O); then into the fourth pipette, containing ammoniacal cuprous chloride, which absorbs carbon monoxide (CO), and finally into the fifth pipette, which is of large size and provided with exploding wires and galvanic battery, for the determination of marsh gas (CH_4) and hydrogen (H). A measured quantity of oxygen gas is added to this pipette and the contents exploded by an electric spark from the battery, resulting in a mixture of carbon dioxide, nitrogen and free oxygen. The quantity of carbon dioxide is determined by passing the gas into the pipette containing potassium hydrate, and the quantity of oxygen by subsequently passing it into the pipette containing potassium pyrogallate, finally determining the quantity of marsh gas and hydrogen from the known reactions which occur during this process, and the composition of the resulting gases.

For each of these processes the pipettes are shaken to hasten the absorption, and the quantity absorbed is determined by returning the gas into the measuring burette and observing the successive differences.

The ashes and refuse withdrawn from the furnace and ashpit during the progress of the test and at its close should be weighed, so far as possible, in a dry state. If wet, the amount of moisture should be ascertained and allowed for, a sample being taken and dried for this purpose. This sample may serve also for analysis for the determination of unburned carbon and for fusing tests.

When the ashes and refuse are to be reported, the ashpit and combustion chamber must be cleaned at the beginning and end of the test, and the amount found at the end of the test weighed.

The dust and ash from the combustion chamber, tubes and flues, should be weighed separately. With heavy forced draft there may be a considerable amount. In some instances endeavor is made to determine the amount carried up the stack. But it is practically impossible to ascertain these quantities with any precision.

The temperatures in the furnace and combustion chambers may be taken by means of electrical or optical pyrometers. These instruments are described in Chapter 11 on HEAT.

Draft gages should be connected between each boiler and its hand-damper, and as near the damper as practicable. In the case of a plant containing a number of boilers, a gage should also be connected to the main flue between the regulating damper and the boilers. It is desirable also to have gages connected to different points of the gas passage through the boiler; to the furnace or furnaces, and in the case of forced draft, to the ashpits and blower ducts. If there is an economizer, a gage should be connected to the flue at each end of it.

The same draft gage may be used for all the points mentioned, provided suitable pipes are run from the gage to each, arranged so as to be readily connected to either point at will.

Draft gages are discussed in Chapter 16 on OPERATION.

The height of the barometer should be observed during important tests and the average given in item 15. It is common to add 14.7 lb. to the gage pressure to find the absolute pressure; but the actual atmospheric pressure as read from the barometer should be added instead if extreme accuracy is desired.

The humidity of the atmosphere should be observed for particularly accurate work. The usual wet and dry bulb thermometer, preferably of the sling type, is suitable for this purpose. Table 83 gives the relative humidity from the wet and dry bulb thermometers, Table 84 gives the weight of moisture present, and Table 85 gives the weight of saturated air. The relative humidity is entered as item 16.

Table 83. Relative Humidity, in per cent (Total Saturation = 100%). Barometer 29.92 in.

Dry Thermometer °F	Difference between Dry and Wet Thermometers, Deg. Fahr.								
	1	2	3	4	5	6	7	8	9
0	66.8	34.0	1.5	.....	.....	.....	.....	.....	.....
10	78.1	56.6	35.3	14.3	.....	.....	.....	.....	.....
20	84.9	70.0	55.2	41.0	26.9	12.9	.....	.....	.....
30	89.1	78.3	67.5	56.8	46.5	36.4	26.3	16.5	6.8
40	91.6	83.4	75.3	67.5	59.9	52.4	45.0	37.7	30.5
50	93.5	87.0	80.6	74.3	68.0	61.9	55.8	50.0	44.3
60	94.5	89.0	83.6	78.3	73.1	68.1	63.1	58.3	53.6
70	95.3	90.6	86.0	81.6	77.2	72.9	68.6	64.4	60.4
80	95.8	91.7	87.7	83.7	79.9	76.1	72.3	68.6	65.0
90	96.1	92.3	88.7	85.1	81.7	78.3	75.0	71.7	68.5
100	96.5	93.0	89.7	86.4	83.2	80.0	77.0	74.0	71.0
110	96.7	93.5	90.3	87.2	84.2	81.2	78.3	75.6	72.9
120	97.0	94.0	91.0	88.0	85.1	82.3	79.6	76.9	74.3
130	97.1	94.2	91.3	88.5	85.7	83.1	80.6	78.1	75.7
	10	11	12	13	14	15	16	17	18
40	23.5	16.5	9.7	3.0	.....	.....	.....	.....	.....
50	38.7	33.2	27.8	22.4	17.2	12.1	7.0	2.0	.....
60	49.1	44.6	40.1	35.7	31.4	27.1	22.8	18.6	14.5
70	56.4	52.5	48.7	44.9	41.1	37.4	33.8	30.3	26.9
80	61.5	58.1	54.8	51.5	48.2	44.9	41.7	38.6	35.6
90	65.3	62.1	59.1	56.1	53.2	50.2	47.4	44.7	42.0
100	68.0	65.1	62.3	59.5	56.8	54.2	51.6	49.1	46.7
110	70.2	67.5	65.0	62.5	60.0	57.5	55.1	52.8	50.5
120	71.8	69.4	67.0	64.6	62.3	60.1	57.9	55.7	53.6
130	73.4	71.1	68.8	66.6	64.5	62.4	60.3	58.3	56.3
	19	20	21	22	23	24	25	26	27
60	10.5	6.5	2.6	.....	.....	.....	.....	.....	.....
70	23.5	20.2	17.0	14.0	11.0	8.0	5.0	2.1	.....
80	32.6	29.8	27.0	24.3	21.6	19.0	16.4	13.9	11.4
90	39.4	36.8	34.3	31.9	29.5	27.2	24.9	22.6	20.5
100	44.4	42.1	39.8	37.6	35.5	33.4	31.3	29.3	27.4
110	48.3	46.1	44.0	42.0	40.0	38.0	36.1	34.2	32.4
120	51.6	49.6	47.6	45.6	43.7	41.8	40.0	38.2	36.4
130	54.4	52.5	50.6	48.7	46.9	45.1	43.4	41.7	40.0
	28	29	30						
80	9.0	6.7	4.4						
90	18.3	16.2	14.1						
100	25.5	23.6	21.7						
110	30.6	28.9	27.2						
120	34.7	33.0	31.4						
130	38.3	36.7	35.2						

The Baltimore & Ohio Railroad Terminal, Chicago, Ill., equipped with Heine Standard Boilers.

Table 84. Weight of Moisture per 1,000 Lb. of Dry Air, in Pounds. Barometer 29.92 In.

Dry Thermometer °F	Vapor Pressure, Inches of Mercury	Difference between Dry and Wet Thermometers, Deg. Fahr.							
		0	1	2	3	4	5	6	7
0	0.0383	0.8	0.5	0.3	0.0	.....	.....	.....	.....
10	0.0631	1.3	1.0	0.8	0.5	0.2	.....	.....	.....
20	0.1026	2.1	1.8	1.5	1.2	0.9	0.6	0.3	.....
30	0.1640	3.4	3.0	2.7	2.3	1.9	1.6	1.2	0.9
40	0.2477	5.2	4.8	4.4	3.9	3.5	3.1	2.7	2.3
50	0.3625	7.7	7.2	6.7	6.2	5.7	5.2	4.7	4.3
60	0.5220	11.0	10.4	9.8	9.2	8.7	8.1	7.5	7.0
70	0.7390	15.8	15.0	14.2	13.5	12.8	12.1	11.4	10.7
80	1.0290	22.2	21.2	20.2	19.3	18.4	17.5	16.7	15.8
90	1.4170	30.9	29.7	28.5	27.3	26.1	25.0	23.9	22.8
100	1.9260	43.3	41.6	40.0	38.4	36.8	35.4	34.0	32.6
110	2.5890	59.6	57.5	55.4	53.4	51.5	49.6	47.8	45.9
120	3.4380	82.5	79.7	76.8	74.1	71.4	68.8	66.3	63.9
130	4.5200	112.5	108.9	105.3	101.7	98.2	94.9	91.7	88.6
	8	9	10	11	12	13	14	15	16
30	0.6	0.3	.....	.....	.....	.....	.....	.....	.....
40	1.9	1.6	1.2	0.8	0.5	0.2	1.3	.....	.....
50	3.8	3.4	2.9	2.5	2.1	1.7	3.4	0.9	0.5
60	6.4	5.9	5.4	4.9	4.4	3.9	6.4	2.9	2.5
70	10.1	9.4	8.8	8.2	7.6	7.0	10.4	5.8	5.2
80	15.0	14.2	13.5	12.7	11.9	11.2	16.0	9.7	9.0
90	21.8	20.8	19.8	18.8	17.9	16.9	23.9	15.2	14.3
100	31.2	29.9	28.6	27.3	26.2	25.0	34.5	22.8	21.7
110	44.1	42.4	40.7	39.1	37.6	36.0	49.0	33.0	31.6
120	61.5	59.3	57.1	55.1	53.0	51.0	68.9	47.0	45.1
130	85.7	82.8	79.9	77.1	74.3	71.5	95.3	66.2	63.6
	17	18	19	20	21	22	23	24	25
50	0.1	.....	.....	.....	.....	.....	.....	.....	.....
60	2.0	1.6	1.1	0.7	0.3	.....	.....	.....	.....
70	4.7	4.1	3.6	3.1	2.6	2.1	1.6	1.1	0.7
80	8.4	7.7	7.1	6.5	5.9	5.3	4.7	4.1	3.5
90	13.5	12.7	11.8	11.1	10.3	9.6	8.9	8.1	7.4
100	20.7	19.7	18.7	17.7	16.8	15.8	14.9	13.9	13.0
110	30.1	28.8	27.5	26.3	25.0	23.8	22.6	21.5	20.3
120	43.2	41.4	39.7	38.0	36.5	35.0	33.5	32.0	30.5
130	61.1	58.6	56.3	54.1	52.0	50.0	48.0	46.2	44.4
	26	27	28	29	30				
70	0.2	.....	.....	.....	.....				
80	2.9	2.4	1.9	1.3	0.8				
90	6.7	6.1	5.4	4.8	4.2				
100	12.1	11.3	10.5	9.7	8.9				
110	19.2	18.1	17.0	16.0	15.0				
120	29.1	27.7	26.3	25.1	23.8				
130	42.6	40.9	39.2	37.5	35.9				

Table 85. Weight in Pounds of One Cubic Foot of Saturated Air.

Dry Thermometer °F	Barometric Pressure—Inches				
	26	27	28	29	30
0	0.0750	0.07788	0.08077	0.08365	0.08654
10	0.07338	0.07620	0.07903	0.08185	0.08468
20	0.07180	0.07456	0.07733	0.08009	0.08286
30	0.07027	0.07297	0.07569	0.07839	0.08110
40	0.06879	0.07143	0.07409	0.07675	0.07942
50	0.06732	0.06992	0.07252	0.07512	0.07773
60	0.06588	0.06843	0.07098	0.07353	0.07609
70	0.06442	0.06692	0.06943	0.07193	0.07440
80	0.06297	0.06542	0.06789	0.07034	0.07280
90	0.06146	0.06388	0.06629	0.06870	0.07112
100	0.05991	0.06228	0.06465	0.06703	0.06939
110	0.05828	0.06060	0.06293	0.06526	0.06759
120	0.05653	0.05882	0.06111	0.06339	0.06569
130	0.05467	0.05692	0.05917	0.06142	0.06367

Report of Complete Test

TABLE 86 contains the items necessary for recording a complete evaporative test. The sequence of the items has been chosen so as to keep the same numbers as were used in the short report, and so avoid confusion in explaining the different items. The actual form of report used should be that prescribed in the A. S. M. E. Code.

Table 86. Complete Evaporative Test.

Description of Boiler.....Rated H.P.....
Located at.....
Date of Test.....Duration.....Conducted by.....
Coal, Kind.....size.....cost per.....lb., $.....
Grate, type.....area.....draft.....
Heating surface, boiler.....superheater.....economizer.....

(1) Steam pressure, lb. per sq. in.....
(2) Percentage of moisture in steam.....or superheat, °F.....
(3) Factor of correction for quality of steam.....
(4) Feed water temperature °F.....
(5) Factor of evaporation.....
(6) Equivalent evaporation per hour, from and at 212° F., lb.....
(7) Equivalent evaporation per hour, from and at 212° F. per sq. ft. of heating surface, lb.....
(8) Percentage of rated capacity developed.....
(9) Percentage of moisture in coal.....
(10) Dry coal per hour, lb.....
(11) Dry coal per sq. ft. of grate surface per hour, lb.....
(12) Equivalent evaporation from and at 212° F. per lb. of dry coal, lb.....
(13) Heating value per lb. of dry coal, B.t.u.....
(14) Efficiency per cent.....

(15) Barometer, in. of mercury.....
(16) Relative humidity of air for combustion, per cent.....
(17) Temperature of air for combustion, °F.....
(18) Furnace temperature, °F.....
(19) Temperature of gases leaving boiler, °F.....
(20) Draft pressure in ashpit, in. of water.....
(21) Draft in furnace, in. of water.....
(22) Draft, leaving boiler, in. of water.....
(23) Refuse, per cent of dry coal.....
(24) Combustible in refuse, per cent.....
(25) Ultimate analysis of dry coal:
  (a) Carbon, per cent.....
  (b) Hydrogen, per cent.....
  (c) Oxygen, per cent.....
  (d) Nitrogen, per cent.....
  (e) Sulphur, per cent.....
  (f) Ash, per cent.....
(26) Fusion temperature of ash.....
(27) Analysis of flue gases by volume:
  (a) Carbon dioxide.....
  (b) Oxygen.....
  (c) Carbon monoxide.....
  (d) Nitrogen.....
(28) Heat balance based on dry fuel:

Description	B.t.u.	Per cent
(a) Heat absorbed by the boiler.....		
(b) Loss due to evaporation of moisture in coal.....		
(c) Loss due to heat carried away by steam formed by the burning of hydrogen.....		
(d) Loss due to heat carried away in the dry flue gases.....		
(e) Loss due to carbon monoxide.....		
(f) Loss due to combustible in ash and refuse.....		
(g) Loss due to heating moisture in air.....		
(h) Loss due to unconsumed hydrogen and hydrocarbons, to radiation, and unaccounted for.....		
(i) Total heating value of 1 lb. of dry coal, Item 13.....		100.0

Calculation of Complete Test

In the following explanation, the item numbers are given at the commencement of the paragraphs:

(1 to 14) These are the same as in the short report.

(15) This is the average of the observations. It is to be converted into lb. per sq. in., and added to the gage pressure, item 1, to find the absolute pressure with which to enter the steam tables.

(16) This item will be used in computing item *g* of the heat balance.

(17) This is the average of the observations. It is used as the basic temperature in finding the losses set forth in items b, c, d and g of the heat balance.

(18) This item is not used in the calculation of any of the results. It is necessary in researches into the transfer of heat by radiation and convection. It may also have some value in investigations as to any unusual formation of clinker in conjunction with item 26.

(19) This item is used as the higher temperature in finding the losses set forth in items b, c, d and g of the heat balance.

(20, 21 and 22) These items are recorded for comparison with other tests.

(23) This item is used to compute the weight of air required and the weight of gases, in computing items d and g of the heat balance.

(24) This item is used in the calculation of item f of the heat balance.

(25) This is the laboratory report.

(26) This is the laboratory report, and is of service in investigating instances of unusual clinker formation. See also the remarks on item 18.

(27) This is the average of the observations, and is used in the calculation of items d and e of the heat balance.

The value of this analysis in promoting economy is discussed in Chapter 16 on OPERATION.

Heat Balance

HAVING given attention to the rest of the items, the construction of the heat balance can now be proceeded with. The heat balance may be made on the basis of coal as fired or of dry coal. The usual basis is dry coal, and the calculations will be studied in this manner. When the general method is understood, it is easy to make the heat balance in either of the ways mentioned. The letters at the commencement of the paragraphs are those of the items in the heat balance 28.

(*a*) *Heat absorbed by the boiler.* Item 12 $\times$ 971.7.

(*b*) *Loss due to evaporation of moisture in coal.* This moisture is heated from the fire-room temperature, item 17, to 212 deg., evaporated, and superheated to the flue gas temperature, item 19. The latent heat of evaporation is 971.7, and the specific heat of the superheated steam is 0.47.

The percentage of moisture, item 9, is always reported on the weight of coal as fired. As the heat balance is based on dry coal, the moisture should be converted to this basis, though if the amount is small, the error is negligible. Thus 2 per cent of moisture becomes $2 \times 100/98 = 2.04$ per cent; and 10 per cent becomes $10 \times 100/90 = 11.11$ per cent.

If coal containing 2 per cent of moisture is fired at 60 deg., and the gases leave the boiler at 500 deg., then each pound of water takes up:

$$212 - 60 = 152.0 \text{ (Heating to 212 deg.)}$$
$$971.7 \text{ (Latent heat of evaporation)}$$
$$500 - 212 = 288, \text{ and } 288 \times 0.47 = 136.0 \text{ (For superheating)}$$
$$\text{Total} = 1259.7 \text{ B.t.u. per pound.}$$

Each pound of dry coal is accompanied by 0.0204 lb. of water and this, multiplied by 1259.7, gives 26 B.t.u.

(*c*) *Loss due to heat carried away by steam formed by the burning of hydrogen.* This is dealt with similarly to the moisture loss, except that the steam resulting is 9 times the weight of the hydrogen. Assuming the same fire-room and flue gas temperatures as before, the loss will again be 1259.7 B.t.u. per pound of steam formed. With dry coal containing 4 per cent of hydrogen, there will be $0.04 \times 9 = 0.36$ lb. of steam formed per pound of dry coal; this multiplied by 1259.7 gives 453 B.t.u.

(*d*) *Loss due to heat carried away in the dry flue gases.* This is nearly always the largest single item of loss. The temperature of the gas is raised from that of the fire-room, item 17, to the exit temperature, item 19. This rise of temperature multiplied by 0.24 (the assumed specific heat) is the B.t.u. loss for each pound of gas. From a fire-room temperature of 60 deg. to a flue-gas temperature of 500 deg., the loss is $440 \times 0.24 = 105.6$ B.t.u. per pound of flue gas.

The weight of gas is computed from the flue gas analysis. An example is worked out in Table 87 to facilitate understanding the method.

Table 87. Analysis of a Sample of Flue Gas.

Volumetric Analysis		Molecular Weight	Weights	Per cent by Weights	Carbon	Oxygen	Nitrogen
Gas	Per cent	C=12 O=16 N=14	(II × III)	100 × Items under IV ÷ Total of IV	12/44 of CO_2 and 12/28 of CO	32/44 of CO_2 and 16/28 of CO	
I	II	III	IV	V	VI	VII	VIII
CO_2	14.0	12 + (16×2) = 44	616	20.29	5.53	14.76	—
CO	1.0	12 + 16 = 28	28	0.92	0.39	0.53	—
O	3.0	16×2 = 32	96	3.16	—	3.16	—
N	82.0	14×2 = 28	2,296	75.63	—	—	75.63
Total	100.0	.....	3,036	100.00	5.92	18.45	75.63

The total amount of carbon in the gases (column VI) is 5.92 per cent. Therefore the weight of dry gases is $100/5.92 = 16.89$ lb. per pound of carbon. If the dry coal contains 80 per cent of carbon and the carbon lost to the ashpit is 2 per cent of the dry coal, then the carbon burned is 78 per cent of the dry coal, and the weight of dry gas is $16.89 \times 0.78 = 13.17$ lb. per pound of dry coal. As shown above, 105.6 B.t.u. are used to heat one pound of dry gas from 60 to 500 deg., and $13.17 \times 105.6 = 1390$ B.t.u.

Study of Table 87 will show that the molecular weights may be canceled and the following formula derived for the weight of dry flue gas

$$W = \frac{11\,CO_2 + 8O_2 + 7(CO + N_2)}{3\,(CO_2 + CO)} \times \left(C + \frac{S}{1.833}\right) \qquad (67)$$

where:

W = Weight of dry gas per pound of dry fuel

CO_2, CO, O_2, N_2 = Percentages by volume in flue gas analysis

C, S = Percentages by weight from ultimate analysis of dry fuel. C is the carbon actually burned, that lost in ashes and refuse being deducted.

Three 360 H. P. Heine Standard Boilers equipped with Laclede-Christy Chain Grate Stokers installed in the Mercy Hospital, Chicago, Ill.

(*e*) *Loss due to carbon monoxide.* When carbon is burned to CO_2, 14,540 B.t.u. are evolved per pound, as against 4,350 B.t.u. when burned to CO. The difference—10,190 B.t.u.—is the loss due to each pound of carbon burned to CO.

Table 87, column VI, shows that 0.39 lb. of carbon are burned to CO out of 5.92 lb. of carbon present in the gases. The proportion of carbon burned to CO is $0.39 \times 100/5.92 = 6.59$ per cent; the carbon present in the gases is 78 per cent of the dry coal, so that $0.0659 \times 0.78 = 0.0514$ lb. of carbon are burned to CO per pound of dry coal. The loss per pound of dry coal is $0.0514 \times 10{,}190 = 524$ B.t.u.

Without proceeding according to Table 87, the CO loss may be found from:

$$L = \frac{CO}{CO_2 + CO} \times \left(C + \frac{S}{1.833} \right) \times 10{,}190 \qquad (68)$$

where:

L = Loss in B.t.u. due to unburned CO

10,190 = Difference between the heat generated by burning 1 pound of carbon to CO_2 and CO respectively,

and the rest of the symbols are as in equation (67).

With bituminous coals the presence of CO generally indicates the presence of unburned hydrocarbons also, so that the whole loss due to combustible in the gases may be assumed to be about double that due to the CO loss. With the anthracites, the CO loss will be the whole loss under this head.

(*f*) *Loss due to combustible in ash and refuse.* The combustible in the ash is the main part of this loss. Sometimes the amount is assumed as the difference between the percentage of ash as weighed up during the boiler test and that found by the coal analysis. Or a representative sample of the ash can be analyzed; if it contains 20 per cent of combustible, and the ash is 10 per cent of the dry coal, then $0.2 \times 0.1 = 0.02$ lb. of combustible in the ash per pound of dry coal. This can be considered as coke and valued at 14,540 B.t.u. per pound. The loss will be $14{,}540 \times 0.02 = 291$ B.t.u. per pound of dry coal.

(*g*) *Loss due to heating moisture in air.* With the readings of the wet and dry bulb thermometers the weight of moisture per pound of air may be found from Table 84.

The weight of air per pound of dry fuel is:

$$A = W + H_2O - C \qquad (69)$$

where:

A = Weight of air per pound of dry fuel

W = Weight of dry gas per pound of dry fuel

H_2O = Weight of water vapor in Item 28*c*, or 9 × Item 25*b*

C = Weight of fuel per pound of dry coal in products of combustion, $1 - \frac{\text{Item } 23}{100}$

Take the weight of gas per pound of dry coal as 13.17 as in item *d*. Then the weight of air will be:

$$13.17 + 0.36 - 0.78 = 12.75 \text{ lb.}$$

The weight of saturated vapor per pound of dry air at 60 deg. is found from the hygrometric tables to be 0.011; if the humidity is 75 per cent, the weight of vapor will be $0.011 \times 0.75 = 0.008$ lb. per pound of dry air. As the weight of air per pound of dry coal is 12.75 lb., the weight of vapor in the air is $12.75 \times 0.008 = 0.102$ lb. per pound of dry coal. The rise in temperature by the specific heat of the vapor is $440 \times 0.47 = 207$ B.t.u. per pound of vapor, and $207 \times 0.102 = 21$ B.t.u. per pound of dry coal.

The loss due to humidity of the air is very small and is usually included in item *h* without separate determination.

(*h*) *Loss due to unconsumed hydrogen and hydrocarbons, to radiation, and unaccounted for.* The flue gas analysis rarely includes a determination of the unconsumed hydrogen and hydrocarbons, and the losses due thereto are usually included in this general item.

The loss due to radiation is from 3 to 8 per cent of the heat value of the fuel. When the boiler is driven hard and the temperature within the setting is high, the actual radiation loss is larger but is a smaller percentage of the heat generated; whereas at very low rates the actual loss is less, but is a larger percentage. Accurate measurement is impracticable; the radiation and "unaccounted-for" losses are usually lumped in one item, which is simply the difference between the sum of the rest of the items, and the heat value of the dry coal, item *i*.

A heat balance may now be made up as an example with the figures assumed, and Table 88 will illustrate the method.

Table 88. Heat Balance.

Destination	B.t.u.	Per cent
Heat absorbed by boiler = equivalent evaporation from and at 212 deg. per pound of dry coal x 971.7(a)	10,390	75.0
Loss due to evaporation of moisture in the coal (b)	26	0.2
Loss due to heat carried away in the steam formed by combustion of hydrogen in the coal (c)	453	3.3
Loss due to heat carried away in the dry flue gases (d)	1,390	10.0
Loss by incomplete combustion of carbon to CO (e)	524	3.8
Loss due to combustible in ash and refuse (f)	291	2.1
Loss due to heating moisture in air (g)	21	0.2
Loss due to radiation, unconsumed hydrogen and hydrocarbons, and unaccounted for (h)	755	5.4
Total calorific value of one pound of dry coal, item 13 (i)	13,850	100.0

The second column is filled in first, and by dividing the different numbers of B.t.u. by their total, the percentages to be written in the third column are found.

Efficiency

THE efficiency shown by item *a* of the heat balance is the same as item 14. It is the combined efficiency of the whole—boiler, superheater, furnace, grate—and is frequently called the overall efficiency. The consensus of opinion is that this is the only efficiency which should be reported.

Attempts have been made to separate the overall efficiency into boiler efficiency and furnace efficiency, and have resulted in much confusion. At present, it is absolutely impossible to decide what proportion of the losses due to unburned combustible gases and to radiation should be charged to the boiler and furnace respectively; and this proportion would very properly vary according to the relative poorness of design of the boiler and stoker. While it would be valuable to know the furnace and boiler efficiencies separately, it must be admitted that up to the present no method of finding them has been proposed which is not highly contentious.

Accuracy

THE absolute accuracy of the results of a boiler test even when conducted with the greatest care is doubtful, but there is as yet no common agreement as to what the probable limits might be. It is generally conceded, however, that there are several sources of indeterminate error, ~~the more important of which are discussed below.~~ The limits of accuracy of a test might very reasonably be taken to be within plus or minus 3 per cent.

One of the sources of probable error is the sampling of coal. Even when the greatest care is taken to obtain a representative sample, there may be an indeterminate error in ascertaining the heat value of the coal, even though the laboratory analysis is most reliable. With modern apparatus these laboratory determinations should be substantially correct as regards the sample tested; but the question as to how truly the sample represents the whole, is always present, ~~and cannot be answered indubitably~~.

Another is the moisture contained in the coal, ~~As explained in the preceding paragraph,~~ the sampling is more or less uncertain. It is contended by some that if the attempt is made to determine the moisture during the test, the methods of drying and weighing are unreliable; while others contend that though the moisture as determined in the laboratory is accurate so far as the sample delivered to the laboratory is concerned, this sample probably does not represent the bulk of the coal actually burned since there must inevitably have been more or less loss of moisture during the collection, preparation and handling of the sample.

Similarly, it is problematical whether the samples collected for the determination of the moisture in steam and for gas analysis are representative of the bulk, although the testing of the samples obtained may be quite accurate.

It is not unusual for heat balances to be reported to the nearest B.t.u. and to the nearest one-tenth of 1 per cent. But the present state of the art of boiler testing does not provide means for attaining anything like this accuracy. In general, results should be reported only to the nearest significant figure. Reporting results of any kind in small units is likely to convey an erroneous idea as to the real accuracy of the figures.

It is therefore quite logical in the case of guarantee tests, that a substantial compliance with the guarantee be accepted as full compliance therewith, although preferably a limit of tolerance should be agreed upon beforehand by the parties to the test. The amount of this tolerance might well bear some relation to the care exercised in arranging the details of the test.

Steam Consumption by Auxiliaries

THE steam or power used in generating forced or induced draft, reducing smoke by means of steam jets, driving stokers, atomizing liquid fuel, oil heaters, oil pumps, and so forth, should be determined and specifically reported. No deductions on this account are to be made; but they may conveniently be reduced to a percentage of the steam generated.

The method of finding the steam consumption of auxiliaries by means of the rate of flow of steam through a nozzle or an orifice in a thin plate is described on page 421.

Soot

SOOT accumulations are seldom accounted for, as the quantity is small during an ordinary trial. The quantity of combustible carried off in the gases as smoke is determined only rarely. A prepared surface of 21 sq. in. in area suspended in a stack has been found to collect 9 to 184 milligrams per hour.

Smoke

NO wholly satisfactory methods for either quantitative or qualitative smoke determinations have yet come into use, nor have any reliable methods been established for definitely fixing even the relative density of the smoke issuing from chimneys at different times. One method commonly employed, which answers the purpose fairly well, is that of making frequent visual observations of the chimney at intervals of one minute or less for a period of one hour and recording the observed characteristics according to the degree of blackness and density, and giving to the various degrees of smoke an arbitrary percentage value rated in some such manner as that expressed in Table 89.

Table 89. Smoke Percentages.

Dense black	100
Medium black	80
Dense gray	60
Medium gray	40
Light gray	20
Very light	5
Trace	1
Clear chimney	0

The color and density of smoke depend somewhat on the character of the sky or other background, and on the air and weather conditions obtaining when the observation is made, and these should be given due consideration in making comparisons. Observations of this kind are also subject to errors of judgment. Nevertheless, these methods are useful, especially when the results are plotted according to the percentage scale determined on so that a graphic representation of the changes can be shown.

Various forms of charts and clouded glass arrangements for comparing and fixing smoke densities have been proposed and to some extent used; but these have proved more or less unsatisfactory and they are subject to personal errors, and to sky, wind, and weather conditions, the same as the simpler method above described.

Among the chart methods referred to, the use of the Ringelmann smoke chart is perhaps the most familiar. This is shown in Fig. 231.

To use this chart, four cards are ruled like those shown, though covering a much larger area, and placed in a horizontal row about 50 ft. from the observer, and in line between him and the chimney, together with two other cards, one of which is white and the other solid black. The observer glances rapidly from the chimney to the cards and judges which one corresponds with the color and density of the smoke. He makes these observations every minute, or oftener if desired, recording the number of the card representing the character of the smoke at the instant of observation. The results are then plotted on a chart, and the variations shown graphically.

The lines in cards 1 to 4 are respectively 1, 2.3, 3.7, and 5.5 mm. thick, and the spaces 9, 7.7, 6.3, and 4.5 mm. The lines should be made with black India ink.

A convenient method of recording and presenting smoke reports is illustrated on page 65.

Another method of smoke determination consists in the use of a narrow flat metal plate suspended in the flue, the character of the smoke being indicated by the amount and quality of the soot and dust deposited upon the plate in a given time. This method, like others, is useful in furnishing a means of comparison in different cases rather than a means of exact determination.

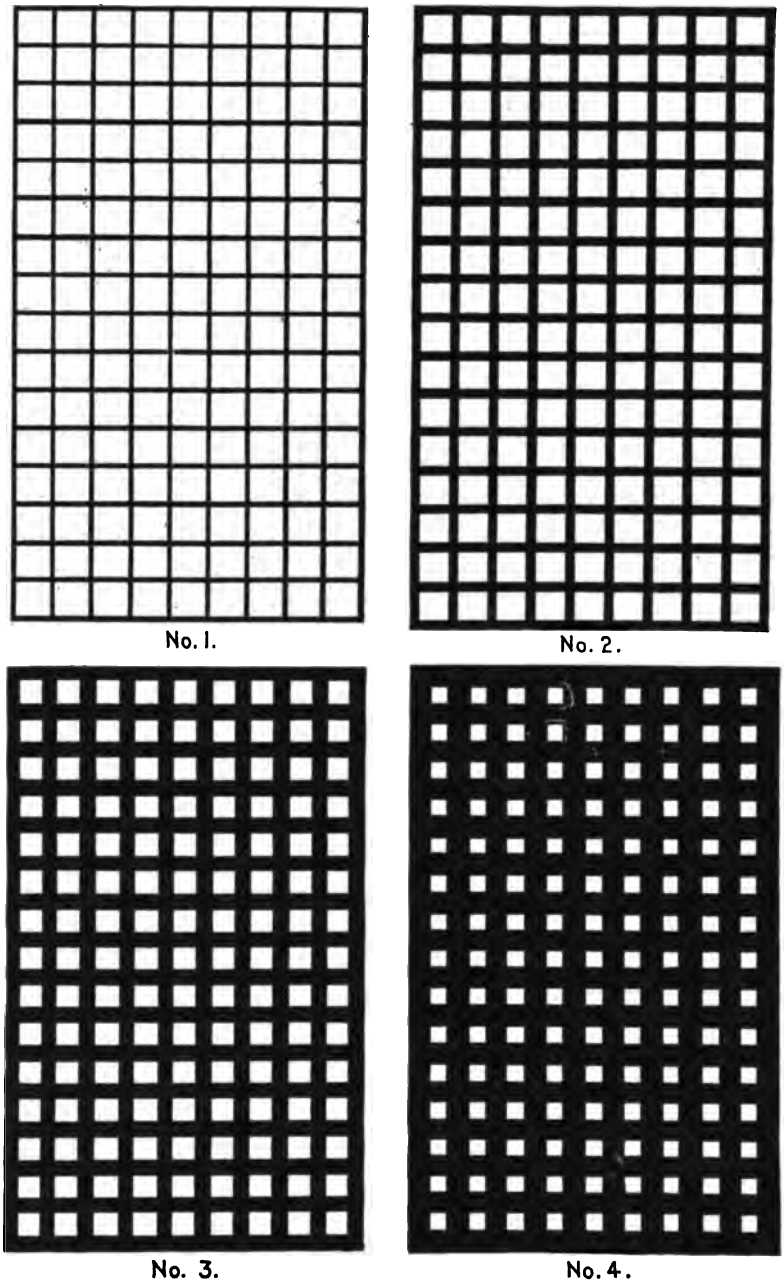

Fig. 231. Ringelmann Smoke Chart.

Among the latest methods brought out for indicating and recording the density of smoke is one depending on the variations in the electrical conductivity of the metal selenium due to variations in the intensity of light shining upon it. Openings are provided on either side of the flue directly opposite each other. The selenium is located at one opening and a strong light at the other. The intensity of the light rays falling on the selenium varies with the density of the smoke. A milliampere meter in circuit with the selenium cell registers the variations.

Liquid and Gaseous Fuels

Tests with liquid and gaseous fuels follow the same general lines as those with solid fuels. Liquid fuel tests are reported on weight of fuel as in solid fuel tests, while gas tests are commonly reported on a volumetric basis.

West Side Station, Denver Gas & Electric Co., Denver, Colo. Part of 10,000 H. P. of Heine Standard Boilers and Heine Superheaters.

CHAPTER 16

OPERATION

THE methods and apparatus concerned in the operation of boiler plants may be divided into two classes—necessities and money savers. The necessities, without which the plant either cannot be operated at all or cannot be operated with safety, will generally be considered first. Discussion of the money savers, which either reduce the cost of operation or assist in reducing it, will follow. The latter might be divided further into two classes —those which directly save money such as feed water heaters and coal conveyors, and those which show where waste occurs such as CO_2 recorders and coal weighers.

Boiler Fittings

THERE are several necessary items of equipment which must be attached to a steam boiler before it is placed in service, among which are a water column, safety valves, steam gage and blow-off valves.

Water Column. The water column usually consists of a cast iron body connected at the bottom with a pipe to the boiler below the water level and at the top to the steam space of the boiler. It is provided with three or more trycocks, one placed at about the mean or normal water line and the others above and below. The gage glass is connected through gage cocks at its top and bottom to the water column; and if both gage cocks are open, the water will stand in the glass at the same height as it is in the column and in the boiler. Both gage glass and water column should be provided with drain cocks, so that they may be blown out. If valves are placed in the pipes connecting the water column with the boiler, particular care must be taken to lock them or otherwise prevent absolutely their closure by unauthorized persons. Long pipe connections from the boiler to the water column should be avoided, as there is always the possibility of such long runs of pipe becoming clogged with sediment or scale, thus causing the water column to become inoperative. In these pipes crosses are preferable to elbows, for when the plugs are removed, the pipes can easily be cleaned and looked through.

Fig. 231 shows the type of water column used as standard equipment on all Heine boilers. This column is provided with copper floats which operate a whistle when the water level is too high or too low.

Safety Valves. The function of a safety valve is to prevent the pressure in the boiler to which it is attached from rising above a definite point called the working pressure. The working pressure of a new boiler is, of course, dependent upon the design and thickness of materials used in its construction. The working pressure of a boiler which has been in service for some time is dependent upon its age and physical condition, and is usually governed by the report of a municipal or insurance boiler inspector.

The A. S. M. E. Boiler Code (1918) requires that the safety valve capacity for a boiler shall be such that the safety valve or valves will discharge all the steam that can be generated by the boiler without allowing the pressure to rise more than 6 per cent above the maximum allowable working pressure, or more than 6 per cent above the highest pressure to which any valve may be set. The total relieving capacity of the safety valve or valves

1000 H. P. Heine Standard Boiler in course of erection at the Walter Reed Hospital, Washington, D. C.

required on a boiler shall be determined on the basis of 6 lb. of steam per hour per sq. ft. of heating surface for water tube boilers. Charts for determining safety valve sizes are given in Chapter 8 on PIPING.

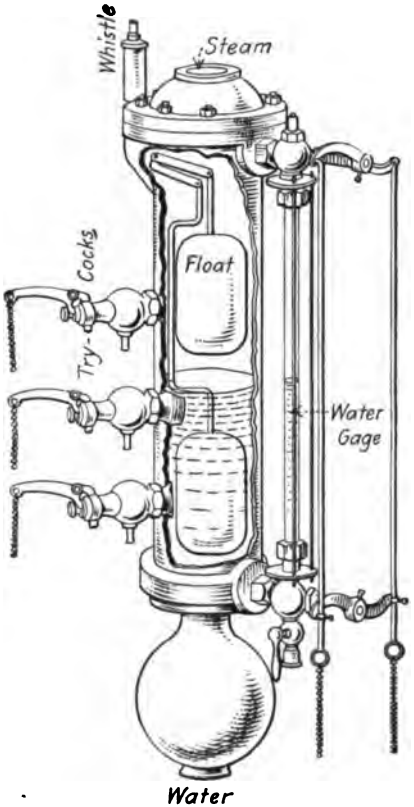

Fig. 231. Reliance Water Column equipped with Self-Closing Gage.

When two or more safety valves are used on a boiler, they may be either separate or twin valves, which are made by mounting individual valves on a Y base. Duplex, triplex or multiplex valves are those which have two or more valves in the same body or casing.

The blow down, or difference between opening and closing pressure of the safety valve shall not be more than 4 lb. on boilers carrying less than 100 lb. gage pressure, not more than 6 lb. on boilers carrying between 100 lb. and 200 lb. pressure, and not more than 8 lb. on boilers carrying over 200 lb. pressure.

The use of weight lever safety valves or dead weight valves is not permitted under the A. S. M. E. Code, hence only spring loaded pop safety valves will be described here.

Fig. 232 illustrates a typical pop safety valve for use with saturated steam, in which the boiler pressure acting upon the under side of the valve is resisted by the helical spring. When the boiler pressure exceeds the spring resistance, the valve lifts from its seat and the steam escapes into the atmosphere.

The valve is provided with a skirt which becomes filled with steam when the valve is open, so that the effective area of the valve is increased. As soon as the valve lifts, this increased area immediately takes effect; and the greater load on the spring compresses it more than would be the case with a plain valve, and the valve opens wider. Once open, the valve will remain open while the pressure drops below that which opened it, because of the effect of the increased area. The pressure per sq. in. on the added area is less than the boiler pressure, and is dependent upon the freedom with which the steam can escape from under the skirt. Passages connect this part with an annular space called the 'huddling chamber," and this chamber is provided with an adjustable outlet. If the huddling chamber outlet is closed, the pressure under the skirt will be greater, and the boiler pressure will drop very low before the spring can close the valve. If the huddling chamber outlet is wide open, the pressure in it and under the skirt will be small, and the valve will close with very little drop of boiler pressure. The difference of pressure between that necessary to open the valve and that at which the spring can close it, is called the "blow down," and is adjusted by controlling the huddling chamber outlet.

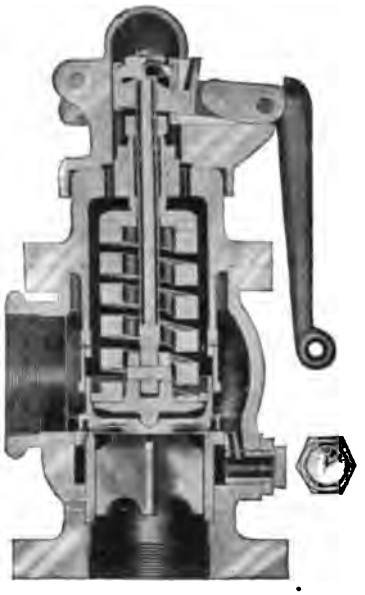

Fig. 232. Ashton Pop Safety Valve for Saturated Steam.

It has been explained how the effect of the skirt is to cause the valve to open wide immediately upon opening at all. In closing, this action is reversed, for when the boiler pressure drops sufficiently to allow the spring to begin closing the valve, the pressure under the skirt drops and allows the spring to close the valve further, so that the action is cumulative and the valve closes quickly. Owing to the rapidity with which these valves open and close, they are called "pop" valves.

The valve may be opened to discharge at any pressure less than the relieving pressure by operating the hand lever.

Every superheater should be equipped with a safety valve at its outlet, set to blow at a lower pressure than the boiler safety valves, in order that a flow of steam may be maintained through the superheater if for any reason the main steam flow is stopped; and this will avoid damage to the superheater tubes by burning.

Fig. 233 shows a type of valve designed for superheated steam service. The spring is exposed to the air, so that high temperature steam does not affect its elasticity by coming in contact with it.

Fig. 233. Consolidated Pop Safety Valve for Superheated Steam.

Steam Pressure Gages. Every boiler must be equipped with a steam gage, which may be connected directly to the boiler steam space or to the water column or its steam connection.

These gages are generally of the round-pattern, indicating type. They consist mainly of a pressure element in the form of a tube spring or a diaphragm, and of a movement to operate the indicating mechanism. The styles differ chiefly in the details of construction, such as material, mountings, trimmings and finish.

The *Bourdon* pressure element is an oval metal tube, closed at one end and bent in an arcuate form to give the single or double spring, as in Fig. 234. The free end of the tube is connected by one or more levers to a toothed sector or segmental rack, which actuates a small pinion on the pointer shaft. Lost motion is taken up by a hair spring attached to this shaft.

For marine and portable work or in stationary installations where vibrations would jar the sensitive mechanism, the double-tube gage is recommended. This gage is not so easily affected by rapid fluctuations of pressure. The two free ends of the pressure tubes are connected to a multiplying mechanism similar to that in the single-tube gage, but the needle movement is much greater.

Single Tube. Indicating Dial. Double Tube.

Fig. 234. Bourdon Tube Steam Gages.

When measuring pressure, gages show the difference between the inside pressure actuating the device, and the pressure on its outside. Therefore, when the gage indicates zero, the pressures inside and outside of the spring are the same; when it indicates 50 lb., then the pressure inside the spring is 50 lb. greater than the pressure on its outside. The absolute pressure is the sum of the atmospheric pressure (14.7 lb.) and the gage reading; thus 50 lb. *gage* is equivalent to 64.7 lb. *absolute*. Pressure is usually expressed in pounds per square inch.

In selecting a gage, the size and unit of the scale required should be specified, and the scale selected should not exceed one and one-half times the working pressure. Round pattern gages used on the steam plant, range from 3 to 12-in. diameter. The dials of indicating gages are usually silver finished brass, having figures and graduations filled with black enamel; or they may be black with silver figures. The casings are iron, brass or nickel-plated.

Gages should be located so that they are accessible, can be easily read, and so connected as to insure correct readings. Standard gages have a ¼ in. pipe-thread male connection and are generally provided with a stop cock. For dark or obscure places, illuminated dial gages should be used.

Gage tubes may become softened when subjected to temperatures of more than 150 deg., so that steam or very hot water should not come in direct contact with the tube. A goose-neck siphon or loop, Fig. 235, is used to maintain a protective water seal between the gage and the steam supply.

When the gage is exposed and subject to freezing, a pet cock, Fig. 235d, should be provided for draining the water from the siphon. Freezing might burst the connection or damage the gage spring. This pet cock should not be opened when the pressure gage is in service, as then the water seal would be lost and the gage tube be liable to be damaged by contact with the steam.

If a gage is placed below a pipe line, Fig. 235e, allowance must be made for the head of water in the seal to obtain correct readings. Such a correction can be made by multiplying the head of water in feet by .433, thus reducing it to lbs. pressure per sq. in., which should be deducted from the gage readings.

Gages should be attached securely to minimize the effects of vibration. Repeated jarring will cause wear of the rack and pinion, resulting in inaccurate pressure indications. Gages subject to vibration, or placed high up and in hot boiler rooms, should be frequently tested. As the spring of the gage has only a slight motion, the least interference with it will produce a noticeable error because of the greater movement of the needle or pointer.

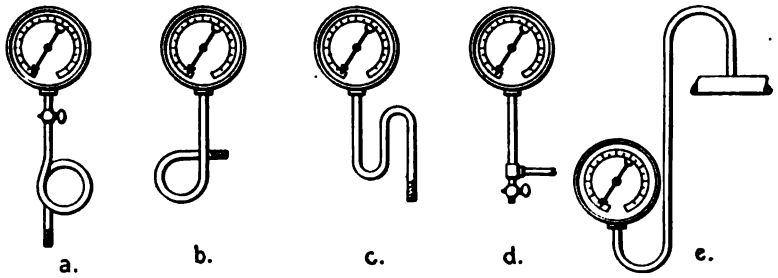

Fig. 235. Siphons for Steam Gages.

A gage can be calibrated by comparison with a standard test gage, or by trial on a dead weight tester, or on a mercury column tester. Where testing devices are not available, as in the small plant, gages should be sent to the factory. A typical dead weight tester, Fig. 236, consists of a

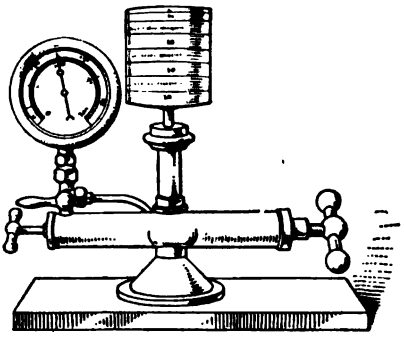

Fig. 236. Dead Weight Gage Tester.

stand on which is mounted an oil reservoir, plunger pump and cylinder fitted with a piston to receive the weights. The gage to be tested is attached to a three-way cock. Each test weight is marked with the pressure in pounds per square inch that it will show on the gage. The weights are placed on the disk, one at a time; and they should be whirled while taking the reading, so as to eliminate the error caused by the friction of the plunger. If the gage is at variance with the dead weight applied, it may be corrected by removing the pointer with a gage-jack and pressing it back on the spindle at the proper indication.

Union Central Life Insurance Building, Cincinnati, Ohio, equipped with Heine Standard Boilers.

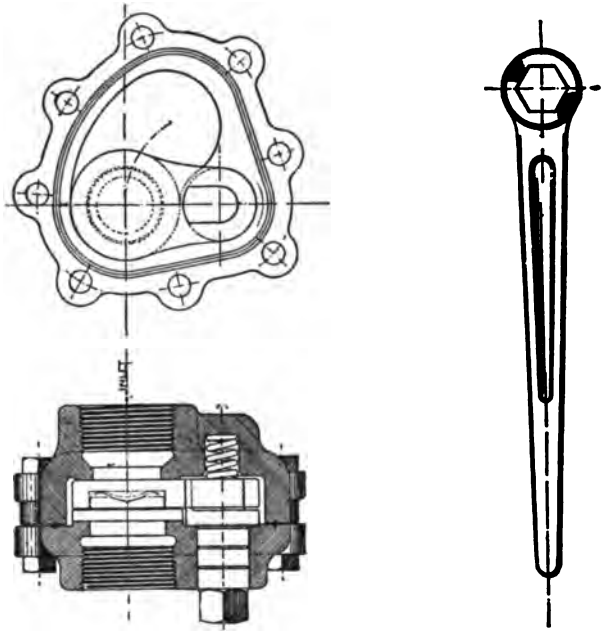

Fig. 237. Everlasting Blow-off Valve.

Fig. 238. Yarway Seatless Blow-off Valve.

Blow-off Valves. All boilers should be equipped with one or more blow-off pipes, with one or more cocks or valves on each pipe. The A. S. M. E. Code (1918) provides that blow-off piping shall not be less than 1 inch or larger than 2½ inches, and that globe valves should not be used. The requirements of a good blow-off valve are that it shall provide a clear passage for water, mud and scale, and that it shall open easily and close tightly.

Fig. 237 illustrates the Everlasting Blow-off Valve, which consists of a top and bottom bonnet and a disc which swings between seats on the faces of the bonnets. The disc is actuated by a lever.

Fig. 238 illustrates the Yarway Seatless Blow-off Valve. A plunger V is operated by a hand wheel and screw. In closing the valve, the shoulder S on the plunger V engages the loose follower gland F, compressing the packing P above and below the port, thus making a tight closure.

Fusible Plugs, see Fig. 239, are intended to protect a boiler in case of low water. At best, these plugs are unreliable, but the law in some states requires their use, even in water tube boilers.

Fig. 239. Fusible Plugs,

The fusible plug consists of a brass or bronze fitting which may be screwed into the shell, furnace crown sheet, or waterleg of a boiler. The fitting is bored out and filled with pure tin or some composition metal which has a melting point but little above the temperature of the steam in the boiler. The metal of the plug transmits the heat to the water so rapidly that its temperature does not rise if it is covered with water; but if the water level falls below the plug, the fusible metal in the core will melt out, allowing the steam to escape. If heard or noticed, this will serve as an indication of low water.

Methods of Hand Firing Coal

HAND-FIRING is not only hard work, but requires considerable judgment and skill if waste of coal is to be avoided. The method of firing depends upon the kind and quality of coal.

Bituminous Coal. Inasmuch as bituminous coals vary widely in composition, it is difficult to state definite rules for handling which will fit all cases. The most suitable method of firing a particular coal is best determined by experimenting with it, and a careful fireman soon learns how to produce the best results.

There are three general systems of firing, known as alternate, spreading and coking.

In the *alternate system,* fresh coal is fired first on one side of the furnace then on the other, or through alternate doors when there are more than two, so that the entire fire is not blanketed with green coal. This system is used where the grates are wide or when two or more furnaces have a common combustion chamber.

The *spreading system* consists in charging a small amount of coal, spreading it in a thin layer over the entire grate at each firing; usually it is spread from the bridge wall toward the door. Although it means more work for the fireman because the furnace must be fired frequently, the use of this system is increasing. It gives an air supply which is always more nearly proportional to the fuel supply.

In the *coking system,* the fresh coal is piled up on the dead plate or on the front of the grate, so that the mass can become nearly or wholly coked. It is then pushed back toward the bridge wall, and spread evenly over the grate to make room for the new charge. When no dead plate is provided, about one-third of the grate at the front is left bare and receives fresh coal at each firing. This system is adapted to furnaces in which the gases pass horizontally over the fire.

The spreading and alternate methods, as compared with the coking system, give higher efficiency, higher CO_2 and lower temperature of exit gases. Because of the greater uniformity in furnace temperatures, steam is generated more uniformly. In the coking method less of the refuse appears as clinker and more as ash, but the combustible lost through the grate is about the same in the three methods of firing. The amount of slicing and raking is equal with all three, but the coking method also requires time and labor for leveling.

The spreading and alternate methods of firing are widely used in hand firing non-caking and high volatile bituminous coals. In the alternate method the volatile matter given off by a fresh change of green coal on the one side of the grate, is mixed with some air which has been heated by passing through the fuel bed on the other side; but care must be taken to make provision for thoroughly mixing the gases from the two sides of the fire, and there is the difficulty of getting one side of the fire heavier than the other. Spreading over the complete fuel bed is perhaps more extensively used than even the alternate method, and has the advantage over the alternate method that the whole fuel bed can be kept of more uniform thickness, thus minimizing the possibility of holes occurring in the fire.

The coking method is most applicable to those bituminous coals which cake or melt and run together upon heating. With this method the hydrocarbons must pass over the hottest part of the fire which is near the bridge wall, on their way to the boiler heating surface. The back part of the fire should be kept thicker, as the character of the coke bed is much more open here than at the front.

Two disadvantages of the coking method of firing are that the fire doors must be kept open relatively long in order to work the fire, which results in large quantities of excess air; and the fire is being continually disturbed, a fact which will result in excessive clinkering with coals containing fusible ash.

Following are a few general rules which have been formulated by the Coal Stoking and Anti-Smoke Committee of the Illinois Coal Operators' Association for the hand-firing of Illinois and Indiana coals.

(1) Break all lumps, and do not fire coal into the furnace of a size larger than the fist. Large pieces do not ignite quickly and their presence results in the formation of holes in the fire, with consequent losses due to excess air.

(2) Keep the ash pits bright at all times. If they become dark it is an indication that the grates are becoming covered with clinkers and that the fire needs cleaning.

(3) Do not fire the coal in heaps on the grate unless filling up a hole. Spread the coal as it leaves the lip of the shovel.

(4) When firing, spread the coal from the bridge wall forward.
(5) Do not allow the fire to burn dull before charging.
(6) Do not allow holes to form in the fire. Should one form, it should be filled by leveling.
(7) Regulate the draft by the ash pit doors rather than by the manipulation of the stack damper. When the stack damper is closed the intensity of the draft is diminished, but by closing the ash pit doors the air supply is reduced.

Referring to rule (7), general opinion is against regulating the draft by the ashpit doors. The air supply is reduced, whether it is the damper or the ashpit doors that are partly closed. Closing the ashpit doors is generally believed to result in unduly heating the grate bars; and it reduces the boiler efficiency by causing an increase in the leakage of air through defects in the setting.

Anthracite. Anthracite should be fired by the spreading method, in small quantities and at frequent intervals. For large sizes of anthracite such as "stove" or "egg," almost any type of hand-fired furnace is suitable. However, the larger sizes of anthracite are now almost exclusively used for domestic purposes, and because of their high cost are but little used under steam boilers. The smaller grades of anthracite do, however, find extensive use as boiler-fuel, and their successful burning depends upon several factors.

The small sizes of anthracite pack closely together on the grates, which makes the employment of a strong draft necessary to secure the proper amount of air for combustion. Mechanical draft is usually employed, which is obtained by the use of steam jet blowers or by fans. As the fine grades of anthracite run higher in ash than the larger grades, there is considerable tendency toward clinker formation; and the employment of steam jet blowers for forced draft is desirable, as the introduction of steam into the ash pit decreases formation of clinker.

It is desirable to disturb the fuel bed as little as possible with the firing tools. With a little practice, the fuel can be spread very thinly. The fire should be kept of even thickness, and if necessary it may be levelled occasionally with a tee-bar. This can be a light tool made of a length of ¾ or 1 in. pipe screwed into the branch of a tee, with pieces of pipe about 6 in. long screwed into the "runs." The fire is simply to be leveled with this tool, and not stirred up. Some firemen get good results by leveling the fire with a tee-bar between each firing.

There is a limit to the forced draft pressure when small anthracites are burned, owing to the liability of lifting the fuel off the grate. This makes holes in the fire and carries some of the fuel into the combustion chamber and flues. Owing to the necessarily slower rate of combustion, the grate area for small sized anthracite is made larger than for bituminous coal in order to develop the same horsepower. The relation of grate area to boiler heating surface to develop the rated capacity of a boiler is given in Table 89.

Table 89. Relation of Grate Area to Boiler Heating Surface.

Size of Coal	Ratio
No. 1 Buckwheat	1 to 40
No. 2 "	1 to 35
No. 3 "	1 to 30
No. 4 "	1 to 25

On account of the large amount of ash in small hard coal, there will be a considerable depth of ash on the grate just before cleaning. The ashpit pressure is small just after cleaning, but as the ash thickens on the grate, the pressure must be greatly increased to maintain an even combustion rate. Therefore, forced draft blowers should be chosen which have characteristics showing that their efficiency is maintained over a wide pressure range.

The "free burning" varieties of anthracite are burned satisfactorily when the above directions are followed. But with the harder coals—those containing very little volatile matter—it is usually necessary to mix from 10 to 15 per cent of bituminous coal. The bituminous coal should be fine "slack," not lumpy.

Tools for Hand Firing. The hoe, slice bar, rake and shovel are the necessary hand firing tools, and Fig. 240 illustrates those designed for a 6 ft. grate.

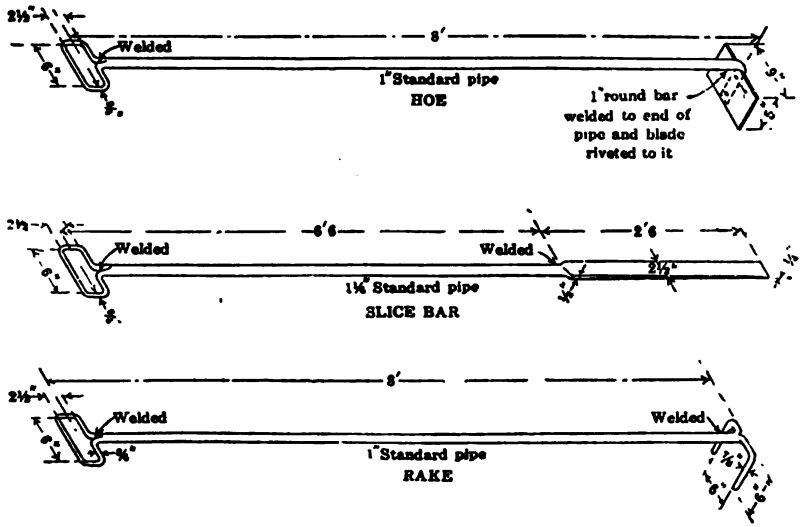

Fig. 240. Tools for Hand Firing.

For best results in hand-firing, the equipment must be so arranged that the shovel and other firing tools can be handled freely without hitting bumps and rivets. This implies sufficient firing space, a smooth floor to receive the coal, or still better, a hand or industrial coal car similar to the type shown in Fig. 241.

In the firing procedure recommended by the *Bureau of Mines,* the fireman takes the position indicated in Fig. 242, in which he can see the thin spots in the fire and can throw the coal on without exertion. He stands 4½ to 5 ft. in front of the furnace at about 12 to 18 in. from the center line of the firing door. The coal pile is about 2 ft. away.

If the coal is less than 6 to 7 ft. from the boiler front, the fireman is crowded. To avoid the intense heat, he stands to one side of the door, and throws the coal in by guess. The room for handling the scoop is not sufficient, so it travels in the arc of a circle, scattering some coal in its path, and dumping the remainder in a heap on the dead plate or on the grate just inside of the firing door. The result is an uneven fire that requires raking and spreading over the grate.

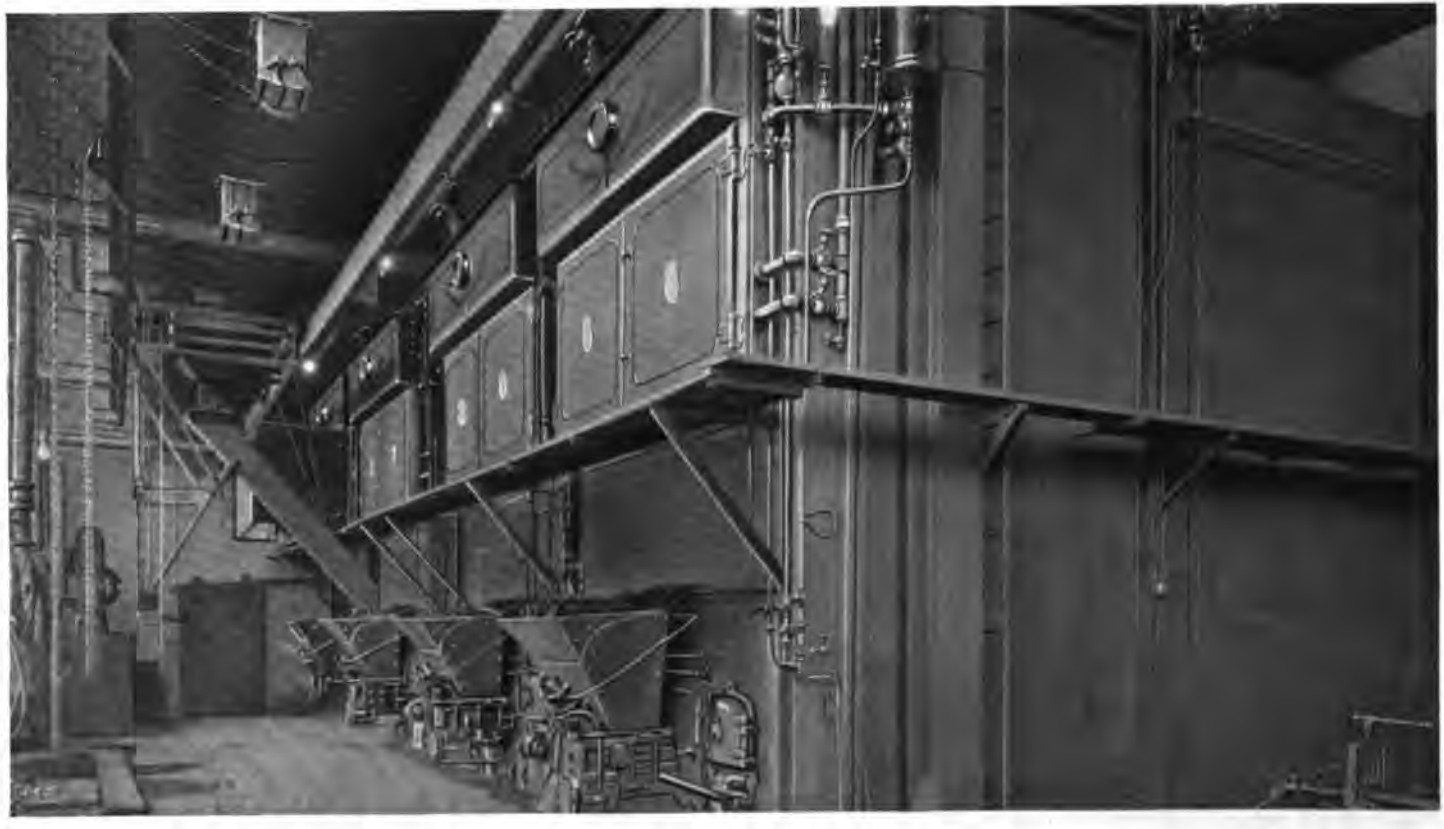

Beck's Run Pumping Station of the South Pittsburgh Water Co., Pittsburgh, Pa. Boilers in this illustration set over Jones Stokers. This company has installed 2600 H. P. of Heine Standard Boilers.

For economy, coal should be burned rapidly and at high temperatures. This means light firing or the frequent charging of small amounts of coal to prevent the thin places from burning through and admitting too much excess air. The amount of coal and time of firing depend upon the grate surface for the available draft. A draft of 1 in. in the uptake will give good results with 2 to 2½ lb. of coal to a square foot of grate at each firing. A boiler with a grate 6 by 8 ft. would then require six to nine shovelfuls of coal at each firing period, about every 5 minutes. For a higher draft the interval might be 3 minutes, and for a lower draft the firing time might be 8 minutes.

The facilities for handling, care in charging and cleaning fires, and the suitability of the type of grate to the fuel burned—all may cause loss or waste of coal. With poor facilities or management the total may run as high as 10 per cent of the coal consumed, while under fair operation the loss will average from 2 to 3 per cent.

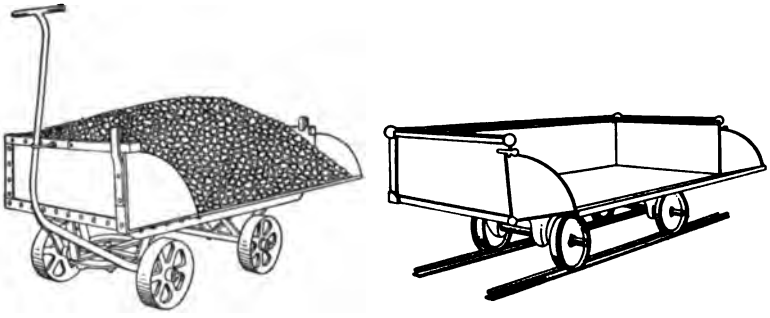

Fig. 241. Steel Coal Cars.

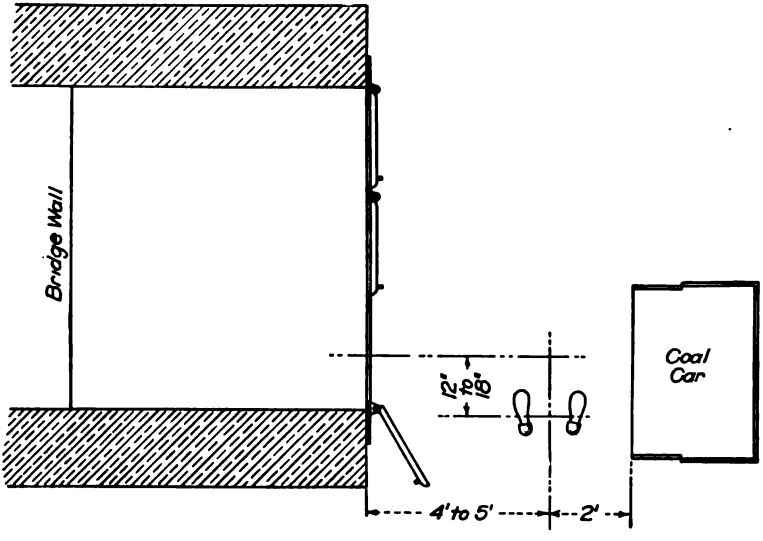

Fig. 242. Proper Position for Hand-firing.

The thickness of fuel-bed required depends to a large extent upon the grade of coal, available draft, firing periods and the experience of the fireman. For a given operating condition and boiler setting, the thickness giving maximum efficiency can be determined by test. If the fuel-bed is too thin excess air will result. If it is too thick the air supply will be insufficient for proper combustion. In either case the boiler efficiency will be decreased. Generally a thin fire is to be favored, but with coarse coal the fire bed should be thicker. For the larger sizes of anthracite a fuel-bed of 6 to 10 in. can easily be carried; a 2-in. bed will give good results with barley and rice coals. The free-burning bituminous coals can be easily handled with a 6 to 10-in. bed; the poorer grades give good results with a fuel-bed 4 to 6 in. thick.

Lignite. Lower grades of lignite disintegrate and crumble readily when heated. The packing of this finely divided fuel on the grate increases the resistance of the fuel bed to the flow of air, hence a high draft pressure is required for even moderate rates of combustion. This crumbling causes intense combustion near the grate where the air enters, and the high temperature at this point, coupled with the low fusion point of the ash, results in the formation of clinkers. The fuel bed should be disturbed as little as possible during firing, because of this tendency to form clinker. Special types of overlapping grates with small air spaces should be used to prevent the disintegrated lignite from sifting into the ash pit. The thickness of the fuel bed may vary from 4 to 8 inches with natural draft, and up to 20 inches with forced draft in the semi-producer type of furnace. Either the alternate or spreading type of firing may be used with lignite.

Wood. Cord wood or slabs may be successfully burned on herring-bone grates with natural draft. When stacked in a furnace they form an open fire through which the friction draft loss is slight, and hence the fuel bed may be as much as from 2½ to 3 feet in depth. Double-deck fire doors on the fire-fronts are convenient for feeding slab wood.

Hog wood, or the refuse resulting from the maceration of logs and mill ends in a hogging machine, may be fed to the grates through chutes or by hand. It is generally burned in a Dutch oven on herring-bone or Tupper grates. The fuel bed may be from two to four feet deep. Care should be taken to avoid too much excess air coming in through fuel chutes or by parts of the grates being uncovered. The bed of fuel should not be disturbed with firing tools of any kind; but even then a large amount of unconsumed wood particles are carried away.

Forced draft under the grates is not desirable, because of increasing the amount of "fly ash" and unconsumed particles of wood carried up into the breechings, etc., where secondary combustion may cause damage.

Excellent results are being obtained in burning this fuel on Laclede-Christy Chain Grate Stokers under Heine standard boilers. Compared with hand operation, these stokers give much higher boiler efficiency and entirely eliminate smoke and the carriage of unburned particles out of the furnace and combustion chambers.

Wet or green sawdust is satisfactorily burned on hollow blast grate bars with forced draft. Inasmuch as the character of the sawdust as regards its resinous properties, moisture content and size of particles, vary in different localities, no general thickness of fire can be recommended, but usually it will be less than twelve inches. It is preferable to fire the sawdust over the grate surface evenly by hand. Heaps or cones formed when the sawdust is fed into the furnace through chutes should be constantly leveled.

Shavings and fine dust from polishing machines are not usually available in sufficient quantities to burn alone. They are generally used in conjunction with coal fired grates, often set in an extension furnace. As this material

is generally very dry, care must be taken that there is a vacuum in the furnace, for if not, the furnace brick work and cast iron fronts will be damaged by the intense heat.

Tan Bark. Tan bark may be satisfactorily burned in a Dutch oven or extension type furnace equipped with horizontal or inclined stationary grates. The grates usually have from 20 to 30 per cent air space, with the actual opening between bars not more than $^3/_{16}$ to $^1/_4$ inch, thus preventing the tan bark from falling into the ash pit. The ratio of grate surface to boiler heating surface is generally about 1 to 30.

The thickness of fuel bed varies with the character of the bark, furnace design and available draft. In the usual practice, the tan bark feed chutes are located in the top of the extension furnace arch, and the material builds up on the grates in the form of cones. These cones will vary in depth, and where they meet will be from 6 to 18 inches.

Tan bark is sometimes fired with bituminous coal in a Dutch oven furnace equipped with dumping or shaking grates. The grate surface in such a case will range between 1 to 35 and 1 to 50.

Cleaning Fires

CLEANING a fire is made necessary by the accumulation of clinker and ash, which impede the air for combustion. The intervals between cleaning depend upon the proportion of ash in the coal and its fusibility, and upon the type of grate. If the coal contains much ash, or ash that is fusible, the fires must be cleaned frequently. Less clinker forms with light fires, which can often be run through a 12-hour shift without cleaning. Fires should be cleaned thoroughly, all clinker and ash being removed so that they cannot fuse and adhere to the side and bridge walls. Accumulations of clinker melted onto the furnace walls reduce the grate area; and the brickwork is damaged when they are eventually broken off.

The more quickly fires are cleaned, the less coal is wasted. The damper should be partly closed while it is being done.

There are two general methods of cleaning fires, the side and the front to rear methods.

In the *side method,* one side of the fire is cleaned at a time. The good coal on the top of the fuel bed is scraped and pushed to one side, large clinkers are broken up with a slice bar, and the refuse drawn out of the furnace. After one side is cleaned, all the burning coal from the other side is moved back and spread evenly over the cleaned part of the grate, after which a few shovels of green coal are added. This adding of fresh coal is necessary in order to have enough live coal to cover all the grate when the cleaning is completed. The refuse is then removed from the other half of the grate and the burning coal spread over the whole grate.

In the *front to rear method,* the burning coal is pushed back with a hoe against the bridge wall and the exposed clinker removed. The burning coal is then pulled forward and formed into a narrow ridge across the bare grate. The clinker from the back of the fire is "jumped" across the ridge with the hoe, and pulled out through the fire door. The ridge of live coal is then spread evenly over the grate. With this method it is difficult to get a really clean fire without wasting a lot of unburned coal.

An improvement on the front to rear method is to form the front of the bridge wall into a shelf or cleaning table. The live coal is pushed onto the cleaning table, giving every facility for thorough cleaning without waste of unburned coal. After the ash and clinker have been removed, the live coal is drawn forward from the cleaning table and spread over the grate.

The height of the cleaning table above the grate should be such that it is about level with the top of the layer of ash. This will naturally vary with the quality of coal and with the length of time between cleanings, but about 6 in. will meet general conditions.

With anthracite, dumping grates are frequently used. The fire is burned very low on one section by not feeding coal to it, and that section is then dumped. Burning fuel is pushed onto the clean grate and fresh fuel added. Other sections are similarly treated until the whole fire is cleaned.

Stand-by Boilers and Banked Fires

POWER plants which operate under changeable load conditions must always be ready to carry the maximum or peak load, and in order to meet these sudden demands, steam pressure must be maintained on the boilers held in reserve.

The length of time that stand-by boilers are held in reserve depends entirely upon the service. Boilers are held in reserve in public utility plants to meet the peak load demands of morning and evening rush hours which come on at definite times; and are also held for long periods to meet unexpected demands, such as are due to thunderstorms, fire protection service, etc.

The quantity of fuel used in banking fires does not contribute directly to the power output of a station, but rather represents the losses due to radiation, leakage, etc., called the stand-by losses. Stand-by losses vary widely in different plants and under different operating conditions, as is indicated in Table 90 which shows the fuel required for banking fires.

Table 90. Fuel Consumed by Banked Fires.

Type of Plant	Method of Firing	Kind of Coal	Rated B.H.P.	Length of Bank, Hrs.	Lbs. Coal Per Hr.
Public Utility	Chain Grate Stoker	Ill. Bituminous	508	2	130
Public Utility	Chain Grate Stoker	Ill. Bituminous	508	24	450
Public Utility	Underfeed Stoker	Bituminous	600	24	330
Industrial	Hand Fired	W. Va. Bituminous	640	72	192
Industrial	Hand Fired	No. 3 Anthracite	600	24	200
Industrial	Side Feed Stoker	Ill. Bituminous	400	8	260

It is obvious that the coal required per hour for a short bank will not be as high as that required for a long bank, due to the fact that the setting remains hot from the previous operating period.

When burning oil, about 2 per cent of the fuel used when operating the boiler at rating, will maintain the full steam pressure for a long banking period.

Quick Steaming From Banked Fires

BOILERS which may be called upon to carry sudden heavy loads must have free and definite circulation, as the water must get in motion quickly. Boiler circulation is not positive, but is induced by "bubble pump" action, wherein the upward travel of the steam bubbles due to their buoyancy, sets the water in motion in the same direction. The unrestricted water passage offered by the spacious Heine waterleg is particularly favorable to starting circulation quickly.

The curve of Fig. 243 by *G. H. Perkins,* of a quick steaming test on a 950 H.P. Heine boiler, demonstrates rapid response to sudden heavy loads by attaining 300 per cent of rating in 4 minutes and 23 seconds, or 3000 H.P. in 5 minutes, from a banked fire.

Forced draft fires, oil or powdered coal, can handle these unexpected loads more rapidly than natural draft. The curve in Fig. 243 is of a trial with a Sanford Riley Underfeed Forced Draft Stoker.

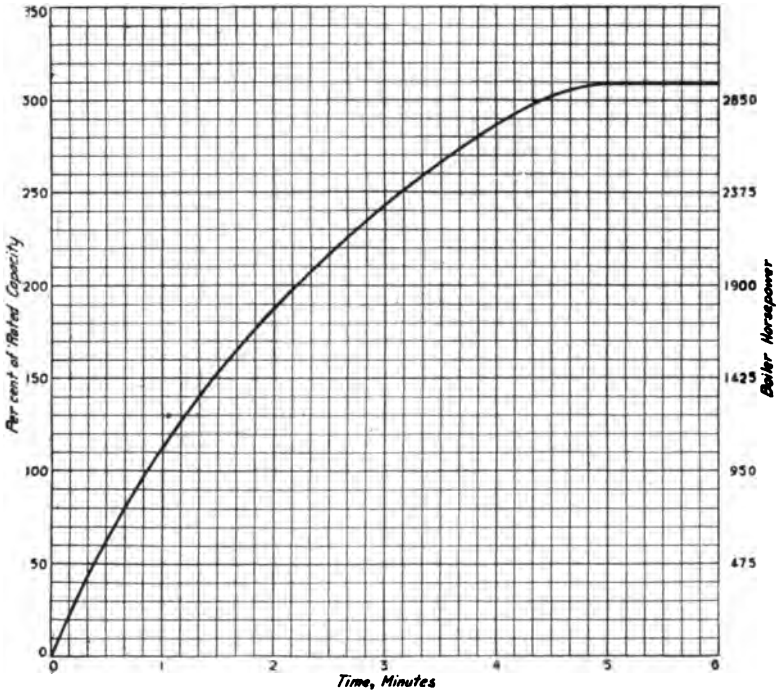

Fig. 243. Quick Steaming from Banked Fires.

Load Signals

IT is often convenient for the firemen to know what load is being carried in the engine room, especially in stations where the load is variable. This may be readily accomplished by the use of a simple signal system. A box with three rows of numbers painted on its glass front, each row from 0 to 9 with a small lamp back of each number, may be placed prominently in the boiler room. The upper row of figures will represent the load in tens of thousands of kilowatts, the middle row thousands, and the lower row hundreds. A bank of twenty-nine switches, each switch corresponding to a number on the signal box in the boiler room, will be placed in the engine room. The lamps in the signal box will light and inform the boiler room operators of the load being carried, as the switches are turned on.

In very long boiler rooms the signal may be composed of a number of lamps arranged as in outdoor electric signs.

Quite elaborate systems of load dispatching have been worked out in large inter-connected power stations.

Prevention of Smoke

SMOKE consists of small particles of unconsumed carbon which give to the gases a color ranging from light grey to dense black. It is caused by the lack of sufficient air at the proper temperature at the point where the volatile gases from the coal should be burned, with the result that the gases are only partly burned and carbon is set free.

United Gas Improvement Company's Building, Philadelphia, Pa., equipped with Heine Standard Boilers. This company has installed 6200 H. P. of Heine Standard Boilers.

The density of smoke may be measured in several ways and the most popular method is by means of the Ringelmann charts, which are described in Chapter 15 on BOILER TESTING.

Many cities enforce ordinances providing penalties to be inflicted upon those plants which are consistent smoke producers. Hence it is the engineer's concern to know of the possible methods for eliminating smoke.

Smoke may be caused by (1) character of fuel, (2) improper method of firing, (3) poor furnace design, (4) lack of sufficient draft, and (5) insufficient furnace capacity.

In general it may be stated that bituminous coals of high volatile content are more difficult to burn smokelessly than those of a low volatile content.

When the various methods of firing were discussed earlier in this chapter, it was mentioned that the particular method selected would depend upon the type of fuel. In general, smokeless combustion will be more completely attained by firing the coal in small quantities and at frequent intervals. It is due principally to this fact that mechanical stokers usually accomplish smokeless combustion.

Much depends upon proper furnace design. The problem of attaining efficient and smokeless combustion resolves itself into three requirements, viz.: the mixing of the unburned gases with the proper amount of air for combustion, the allowance of time for combustion, and the maintenance of high furnace temperatures, all of which depend upon correct furnace design.

The converse of proper mixing is stratification or laneing, which occurs commonly in hand-fired furnaces, and is the more objectionable where the gases rise directly from the fuel bed into the tubes as in the case of vertically baffled boilers. The installation of wingwalls, mixing piers, arches, and steam jets is often necessary to effect smokeless combustion. But it is difficult to construct such arches and piers to stand up satisfactorily under the intense furnace heat, and some of these mixing devices take up room, diminish the combustion space in the furnace and also reduce the available draft.

The preferable way to reduce smoke and still obtain the proper mixing effect in the furnace is to employ horizontal baffles, with a curtain wall added for high volatile coals. Fig. 20 on page 93 shows such an arrangement which is highly successful.

Time is also an important element in smokeless combustion and depends upon the length of gas travel and the volume of the combustion chamber. Horizontal baffling meets this requirement, as has been shown in experiments by the *U. S. Bureau of Mines* with a Heine boiler in which, with a combustion rate of 64.5 lbs. of coal per square foot of grate area per hour, only 1 per cent of the total unconsumed combustible was present when the products of combustion had traversed 160 cubic feet of combustion space.

The higher the furnace temperature the more rapid and complete is the combustion with absence of smoke, as is shown by tests made on a Heine boiler at the University of Illinois. This boiler was equipped with a bottom horizontal baffle of C tile which completely encircled the tubes of the lower row over the furnace. It was "almost impossible to make smoke with this setting under any condition of operation."

Inasmuch as part of the air for the complete combustion of bituminous coal must be drawn through the fuel bed and the rest admitted above the fire, it is obvious that smoke will result if there is a lack of sufficient draft. The largest quantity of secondary air is required just after firing, and much less is needed for the rest of the cycle until the next firing.

A well designed and operated furnace will burn a given fuel without smoke up to a certain critical combustion rate. Beyond this rate the efficiency will decrease and smoke will result, owing to the lack of air and of furnace

capacity in which to mix the gases. This is the reason why hand-fired furnaces usually smoke when they are being forced to carry much overload.

When fires are being kindled or when banked fires are being forced, smoke is almost unavoidable, and most city ordinances provide exceptions to their rules to cover these circumstances.

Cinders. In large central stations operating boilers at high ratings with stokers and forced and induced draft, there is often a nuisance caused by cinders discharged from the stacks. Attempts have been made to reduce this by installing cinder catchers in the stack, but these have not been particularly effective. A cinder-separating induced draft fan which is claimed to be successful, has recently been placed on the market.

Meaning of Carbon Dioxide

THE proportion of CO_2 in flue gas is a gage of the success realized in preventing inleakage, and in securing combustion of the fuel with the minimum amount of air. The more nearly the maximum value is approached, the greater the success in keeping down the excess air and the consequent heat losses up the chimney. This maximum value runs from about 18.5 with high volatile bituminous coals to about 20.0 with anthracite. Assuming an all-carbon fuel, the percentage of excess air used can be calculated directly from the CO_2 percentage, and equals:

$$100\ \frac{20.9 - D}{D} \qquad (70)$$

in which D is the percentage of CO_2 by volume in the exit flue gases. As each volume of CO_2 present is produced by the consumption of an equal volume of oxygen, the numerator in the fraction represents the unconsumed or excess oxygen remaining in the gas, and the denominator the oxygen actually consumed; that is, the amount theoretically required for combustion.

Fig. 244 indicates the amount of excess air, and the preventable fuel loss corresponding to observed percentages of CO_2 based upon average coals. Good practice is represented by 15 per cent CO_2, which corresponds to 40 per cent excess air, with practically no preventable loss up the stack. In the absence of effort to maintain high values of CO_2, a usual average in a great many power plants is as low as 5 per cent.

Of course, the exact amount of excess air and the preventable fuel loss will depend upon several circumstances. The chart, Fig. 245, by *Haylett O'Neill,* shows the effect of the flue gas temperature on the efficiency with different proportions of CO_2. These curves are typical, although they were drawn for the following specific conditions:

Coal, B. t. u. per lb.	14,500
Combustible, per cent	90
Volatile hydrogen, per cent	5
Moisture, per cent	2
Relative humidity of air, per cent	65
Temperature of air, deg.	80
CO in flue gases, per cent	0.1
Steam pressure, lb. per sq. in.	150
Combustible in ash, per cent	30

The overall efficiency decreases as the CO_2 content is reduced, and as the exit temperatures are increased, except with low flue temperatures. These correspond to low rates of driving, with high radiation losses and low efficiency.

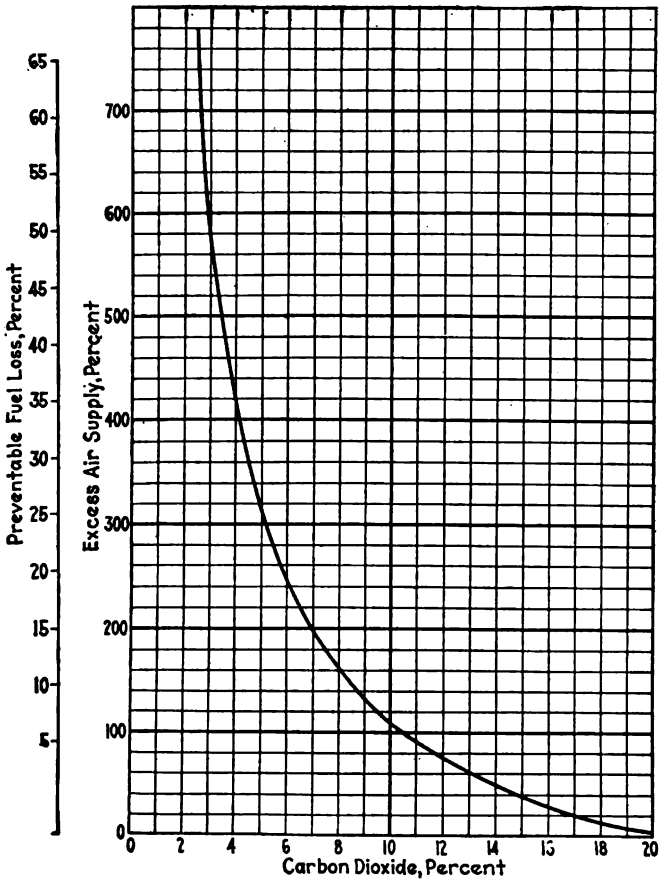

Fig. 244. Chart for Estimating Excess Air from Per cent of Carbon Dioxide.

A high value of CO_2 is constantly sought in boiler operation. Few boilers are operated with an air supply even approaching the minimum, and the amount of CO in the flue gas becomes objectionable only when the air is so reduced that the CO_2 is above 15 per cent. The CO_2 is generally low when surplus air is introduced, and is increased by adjusting the draft and fuel-bed resistance, by closing holes in the setting, and by avoiding holes in the fire. With complete CO_2 records the work of different firemen can be checked. When these records cannot be kept, special tests can be made and the conditions under which they were produced studied, so as to fix a standard of operation. Samples of such studies are given in Fig. 246. A comparison of samples from different passes indicates leakage through the setting.

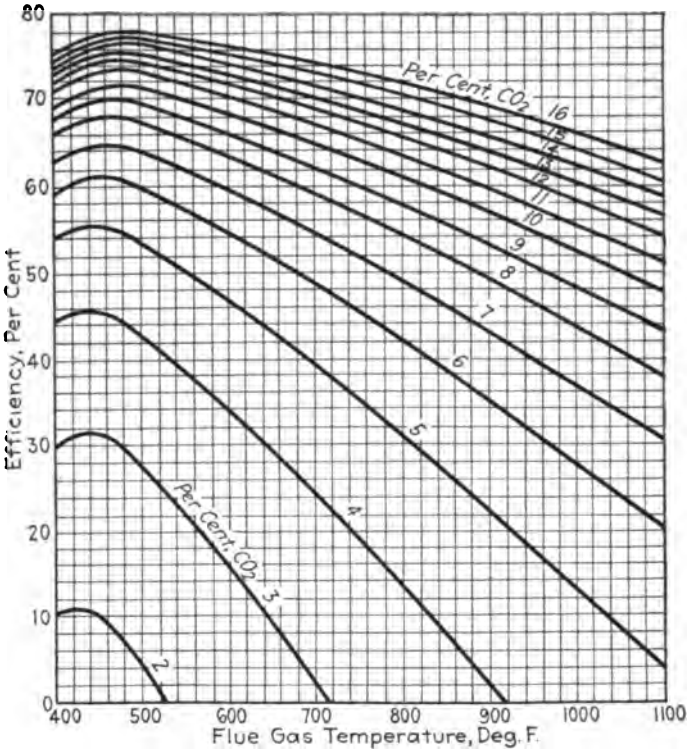

Fig. 245. Boiler Efficiency as affected by Flue-Gas Temperatures.

Effects of Firing on Carbon Dioxide

A COMPARISON of firing conditions with CO_2 records, either from an automatic chart or from one made by plotting the analysis of grab samples against time, indicates the effect of different operations on furnace efficiency. Fig. 246 illustrates the method.

In A, which is hand-firing, the fire was dirty and the CO_2 was down to 5 per cent; but after cleaning, it rose to 13 per cent.

Record B was made with a sloping grate stoker, and shows how the CO_2 fell as the fire was cleaned, and rose as soon as the dump grate was closed. It was customary to poke coal down from the hopper soon after each cleaning, and this was accompanied by a big drop in CO_2, which indicated the entrance of much excess air due to the upper part of the grate being covered with unignited coal. As this new coal became ignited, the CO_2 again rose.

The latter part of C shows good hand-firing; the CO_2 rises after each firing and falls slowly. The first firing was uneven, and quickly burned into holes, which reduced the CO_2 to 3 per cent.

The effect of leveling a fire which was full of holes is shown in D.

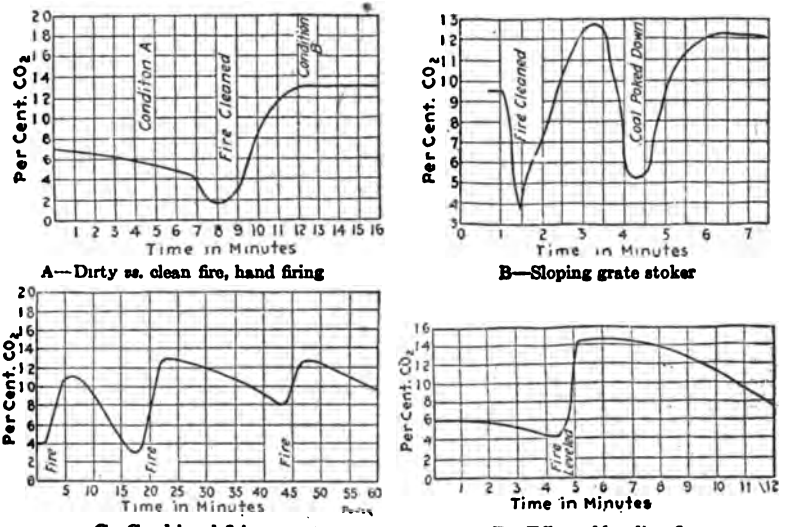

A—Dirty vs. clean fire, hand firing

B—Sloping grate stoker

C—Good hand firing

D—Effect of leveling fire

Fig. 246. Variation of CO_2 with Different Methods of Firing.

Fig. 247, by *M. Gensch,* shows the general effect of excess air. The fuels for which results were plotted are typical high-grade and low-grade coals, so that values for other coals would lie in the bands between the different pairs of curves. The combustion temperature and the efficiency

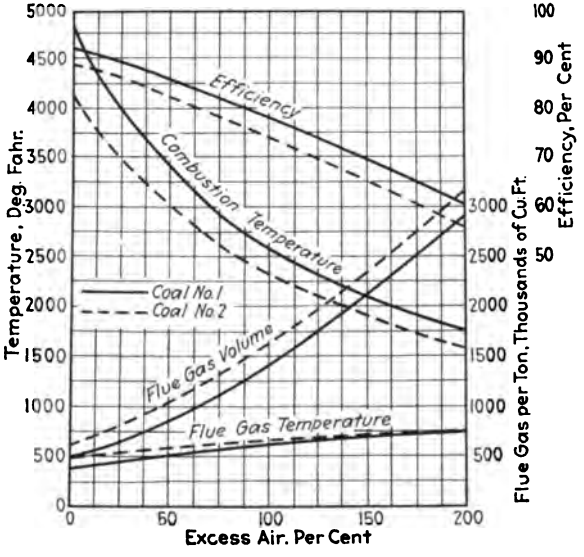

Fig. 247. Effect of Excess Air on the Combustion of High-Grade and Low-Grade Coals.

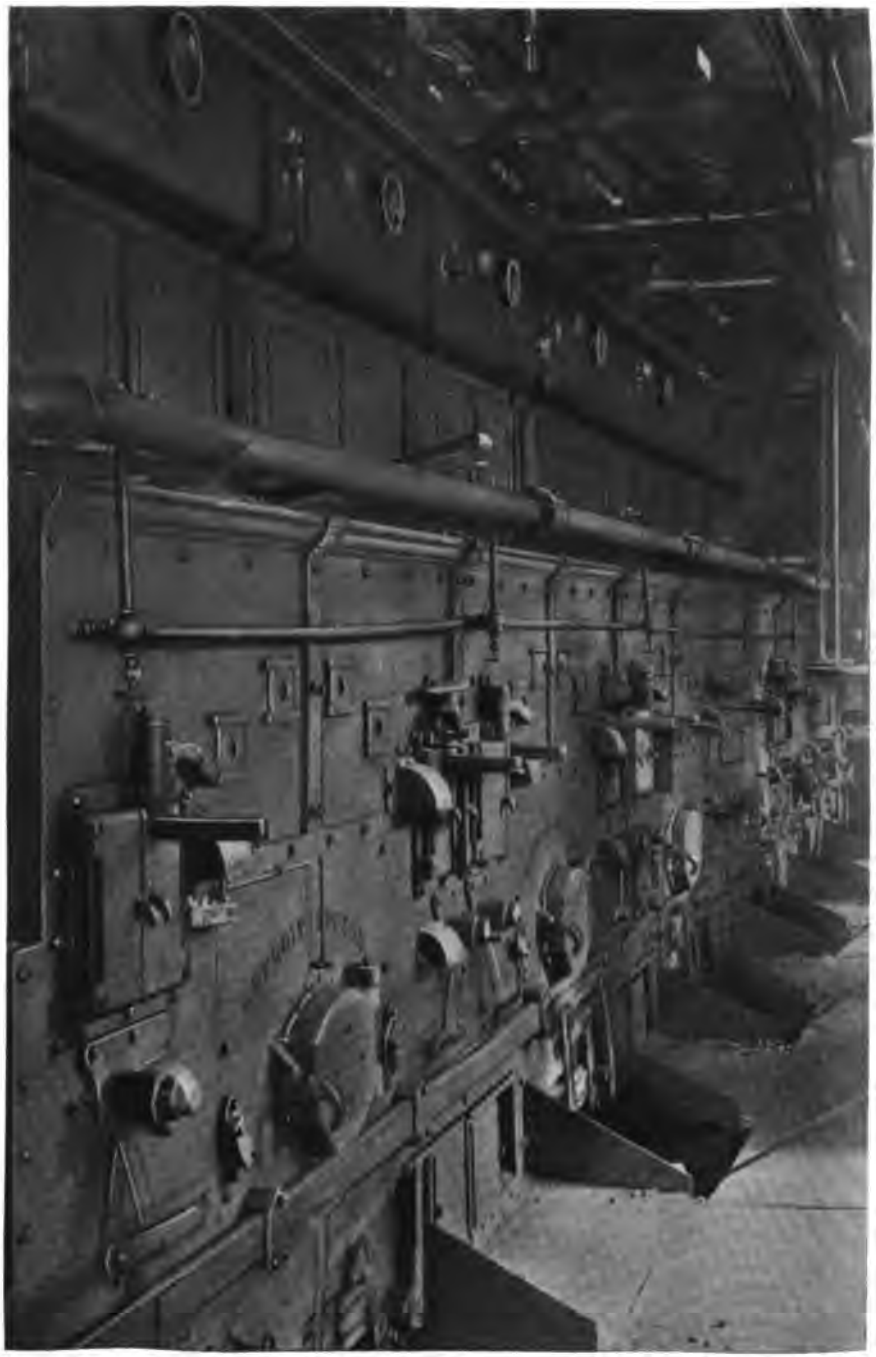

A part of the 2844 H. P. installation of Heine Standard Boilers in the United States Government Hospital for the Insane, Anacosta, D. C.

fall as the amount of air increases. At the same time the flue gas volume increases, resulting in greater load on the draft fan and on the chimney.

The admission of undue excess air through the fire bed is corrected by adopting standard methods of firing. Air leakage through the setting can be eliminated only by testing every point where air might possibly get in and by stopping up the cracks. The flame of a lighted candle held next to the cracks will indicate whether any air is being drawn in, or the sudden closing of the damper when the fire is operating at a high rate will cause smoke to issue from the cracks.

Cracks can be caulked with a mixture of fire-clay and waste, or with magnesia covering made into a paste. Several coats of asphaltum-base paint should be applied to leaking settings.

Carbon Monoxide

THE presence of CO or carbon monoxide in flue gas indicates partly-burned carbon; the cause may be insufficient air, poor mixing of the air with the combustible gas, reduced furnace temperature, or the rapid distillation of volatile after firing, with insufficient secondary air to consume it. The CO may be present even with high O_2, as when the fire is clogged at some points and air is coming through large holes at others.

Any CO produced in a furnace results in the loss of 70 per cent of the heat of the carbon involved, and furthermore the presence of CO indicates that other combustible gases such as hydrogen and hydrocarbons, are escaping unconsumed.

Carbon Dioxide Recorders

THE method of analyzing flue gas by means of the Orsat apparatus is described on page 532. While hand indicators, such as the Orsat, can be used as a means of studying air-supply conditions, or for occasional tests, as discussed on page 574, they do not answer the purposes of daily plant operation, since the CO_2 content of the flue gases varies widely, due to the fact that the proportions of air supply through and above the fire are easily unbalanced by the firing of fresh coal, open fire doors, holes in the fire, damper manipulation, etc. Hence a number of instruments have been developed that will test automatically the quality of the flue gases and make a continuous graphic record of the percentages of CO_2 they contain. These furnish a definite and permanent record, which assists not only in correcting improper combustion, but also has a moral effect in maintaining the right conditions.

The recording instruments depend for their operation upon the absorption of CO_2 from a sample of the flue gas, usually by means of a solution of caustic potash, though sometimes it is used in the solid form. In one instrument it is replaced by ordinary quick lime which has similar absorbent properties.

Several different methods are used to measure the sample of gas, and to bring it into contact with the absorbent. In one type of instrument a flow of water trickles continuously into a container. When this container becomes full, it is suddenly emptied by a siphon action which draws in a measured sample of the flue gas. This is then put into communication with the chamber containing the caustic solution. The diminution of its volume by the absorption of the CO_2 is measured by the descent of a gas holder in which it is contained. The motion of this holder causes a pen to draw a line on a chart, the length of the line being proportioned to the CO_2 percentage. This cycle of operation takes place every few minutes, according to the rate of flow of the water.

In another type of instrument the reduction of pressure caused by the absorption of CO_2 is used to indicate the percentage. By means of a steam jet aspirator, a small current of flue gas is drawn continuously through a chamber containing the absorbent. When the CO_2 is eliminated, the pressure in the chamber is reduced, and the reduction is measured by a manometer or other form of pressure gage. This method provides a continuous record, and the recording instrument can be placed at a distance from the boiler room. In an alternative plan, flue gases are drawn through a chamber in which the absorbent is covered by a porous pot. The reduction of pressure inside this pot is utilized to operate the manometer. In both these types, however, more absorbent is consumed than in an intermittent test, and the steam used by the jet may be considered as wasted.

In a third method of determining CO_2, the flue gases pass through two ordinary gas meters, one before absorption and one after. The second one will work more slowly, as it naturally has less gas to measure. The difference in their speed is recorded by a differential gear, which operates the pen producing the record. In this type of instrument, dry calcium hydrate forms the absorbent, and the gases are drawn through the meter by a water jet.

A *CO_2* recorder should run indefinitely, and the only attention required should be to change the chart, renew chemicals, and change the filtering material in the gas line. The instrument should compensate automatically for temperature changes, changes of volume and specific gravity in absorbent solution, and changes of draft in boiler. It should have a minimum number of moving reciprocating parts. It is desirable to have a recorder for each boiler, but if one recorder is used for a battery of boilers, the piping should be arranged so that the firemen will not know which boiler is connected. This can be accomplished by running the gas pipe from the boiler to a common header, and then boxing the valves on the header.

A CO_2 recorder made by the *Mono Corporation of America*, is shown in Fig. 248, which may be operated with either water or compressed air at a minimum pressure of 8 lbs. The manufacturers state that it will make records of up to 40 analyses per hour. The pressure medium, by which the apparatus is driven, passes through a regulating valve and the receiver into a bottle containing mercury. This forces the mercury from the bottle up through a system of tubes, of which one leads to the volumeter and another to the gas release outlet. When all the mercury is thus displaced, the pressure in the bottle is released through contact with the atmosphere. Then the mercury, which was forced up the tubes, recedes to the bottle, sealing the receiver, and the cycle is repeated. In this way an alternating rising and falling movement is employed in drawing in the flue gas for analysis and letting off excess gas.

As the mercury falls in the volumeter, the gas to be analyzed is drawn in through the gas inlet and mercury seal. When the mercury rises, the gas in the volumeter, which contains 100 cc., is forced through the tubes and a second mercury seal to the caustic potash container, which is filled with the absorption liquid and through which the gas bubbles, thus making the absorption of CO_2 complete. The remainder of the gas passes into the gasometer, which is suspended in a glycerine solution, where it is measured again at the same temperature as in the volumeter. As the gas enters, the gasometer rises, turning the pulleys from which the recording pen is suspended. When the pen has come to a stop on the chart, the mark indicates the percentage of gas absorbed. Then the gas in the gasometer is released to the atmosphere, and the apparatus is ready for a new analysis.

The CO_2 record furnishes a good index of furnace performance, but a knowledge of the percentage of CO in the escaping flue gases is also valuable. Records of CO can be secured from an instrument consisting of a *Mono* CO_2 recorder and a special CO attachment. The CO_2 recorder is of the usual ab-

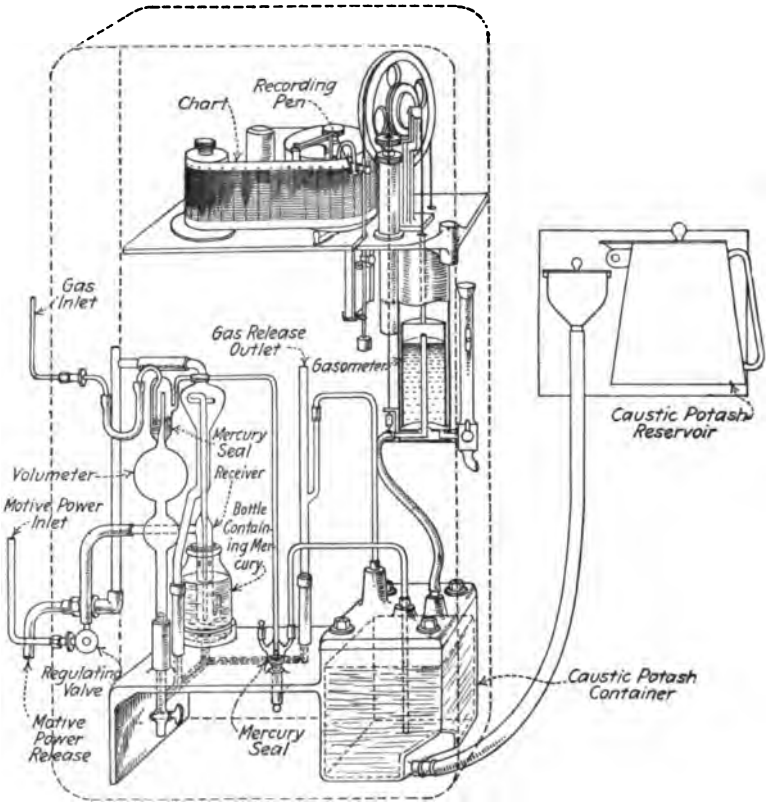

Fig. 248. Mono CO_2 Recorder.

sorption type, operated either by air or water pressure. When CO is to be measured, a chamber containing an electric furnace and the chemicals to carry on the reactions is mounted on the wall next to the recorder. Either CO or CO_2 can be shown on the chart, but the two cannot be recorded simultaneously. The usual practice is to supply CO_2 instruments for each boiler and one complete CO recorder, arranged to be connected to any unit, for each plant.

Draft Instruments

THE difference of pressure causing the flow of gases through fuel bed and boiler is referred to as "draft," although the term is sometimes loosely applied to the motion of the gases. These pressures are measured by instruments called draft gages, and are usually expressed in inches of water.

Draft gages may be simply glass tubes bent into U form and half filled with water. The differences in level are frequently so small that they are difficult to read accurately. The bore of the tube should be the same in both legs, or error is introduced as may be seen by the liquid standing at different levels in the two legs when both are open to the atmosphere. If

the inside of the tubes is not clean and free from grease when water is used, the water will not freely "wet" the glass, and the surfaces in the two legs will not be similar in height or shape when the gage is "free." Readings should be taken from the lowest part of the meniscus with liquids which wet the glass, such as water; and from the highest part of the meniscus with liquids which do not wet the glass, such as mercury.

When the pressure fluctuates so rapidly as to interfere with observation, the pulsations may be damped in a plain U-gage by putting a few small stones or some sand in the lowest part of the tube.

To facilitate reading the gage when the differences in level are small, verniers are sometimes provided.

Various devices are used to exaggerate small pressure differences, though some are delicate and only suitable for laboratory work. In gages for the boiler room, flexible diaphragms, slanting tubes, and non-miscible liquids in combination with small bore tubes connecting the U-gage legs, are used. In the slanting tube gages, mineral oil of a sp.gr. less than unity is generally used; and it is highly colored, bright red or blue, so that the instrument can be easily read.

A simple draft gage indicates the difference in pressure between the point to which it is connected and the atmosphere, while a differential gage indicates the difference in pressure between two points in the gas passages. Fig. 249 illustrates a Hays differential draft gage.

Fig. 249. Differential Draft Gage made by Jos. W. Hays Corporation.

Compound and triple types of differential gages are composed of two and three single instruments respectively. With these, the draft can be read simultaneously at different points in the setting. For forced or balanced draft, the scale of a single instrument can be divided with the zero point about midway. The liquid then moves to the right under a vacuum and to the left under a positive pressure.

The gage should be located so that it can be seen by the fireman when he is setting the damper. The connections from the gage are usually of ¼-in. pipe, this being led through a larger pipe into the furnace, pass or flue. The connection should merely project through the wall, to prevent the burning off of the end. The piping into the furnace should be as close as possible to the front and to the top of the chamber, to avoid slag accumulation.

An indicating instrument of the diaphragm type, Fig. 250, is used for forced draft installations. This has three scales, reading from 0 to 2 in. of water for the flue connection, 1-in. vacuum to 1-in. pressure for the com-

bustion chamber, and 0 to 6 in. pressure for the ash pit. The varying pressures are transmitted by diaphragms to plungers, which are attached to horizontal shafts by links or levers. The indicating pointers are carried on these horizontal shafts.

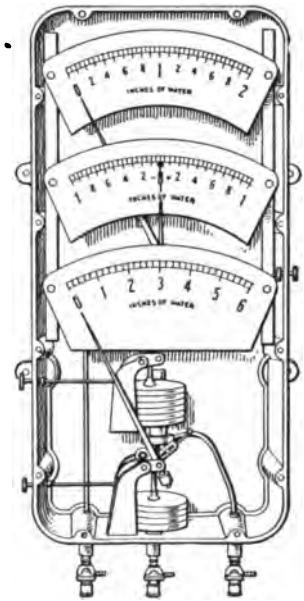

Fig. 250. Triple Draft Gage made by Precision Instrument Co.

The Significance of Draft. Efficient combustion requires that a certain quantity of air be supplied for each pound of fuel burned. Therefore, the quantity of gases passing through the boiler setting will be almost in direct proportion to the load on the boiler when combustion is progressing properly. And inasmuch as the boiler heating surface interposes a resistance to the flow of gases, a differential draft gage indicating the pressure drop or draft loss between furnace and up-take, will act as a gas flow meter and indicate whether or not the proper quantity of air is being supplied for the given load. A differential gage so located will also indicate the cleanliness of the gas passages, since an undue increase in draft loss will mean that they are becoming clogged.

A differential draft gage connected so as to show the draft loss through the fuel bed, in conjunction with one showing the drop through the boiler, will indicate any change in the furnace conditions. A relative increase in the fuel bed drop will indicate that the fire is becoming thicker, or that it is becoming clogged with clinkers and ash. Similarly, if the pressure drop becomes less, it indicates that there are holes in the fire or that the fuel bed is too thin. The above principles are made use of in so-called combustion meters and efficiency indicators in which fixed points are set by test on the gage scale representing the best draft relations for the particular unit. Deviation from these points warns the operator of unfavorable conditions.

Union Trust Building, Cincinnati, Ohio, equipped with Heine Standard Boilers.

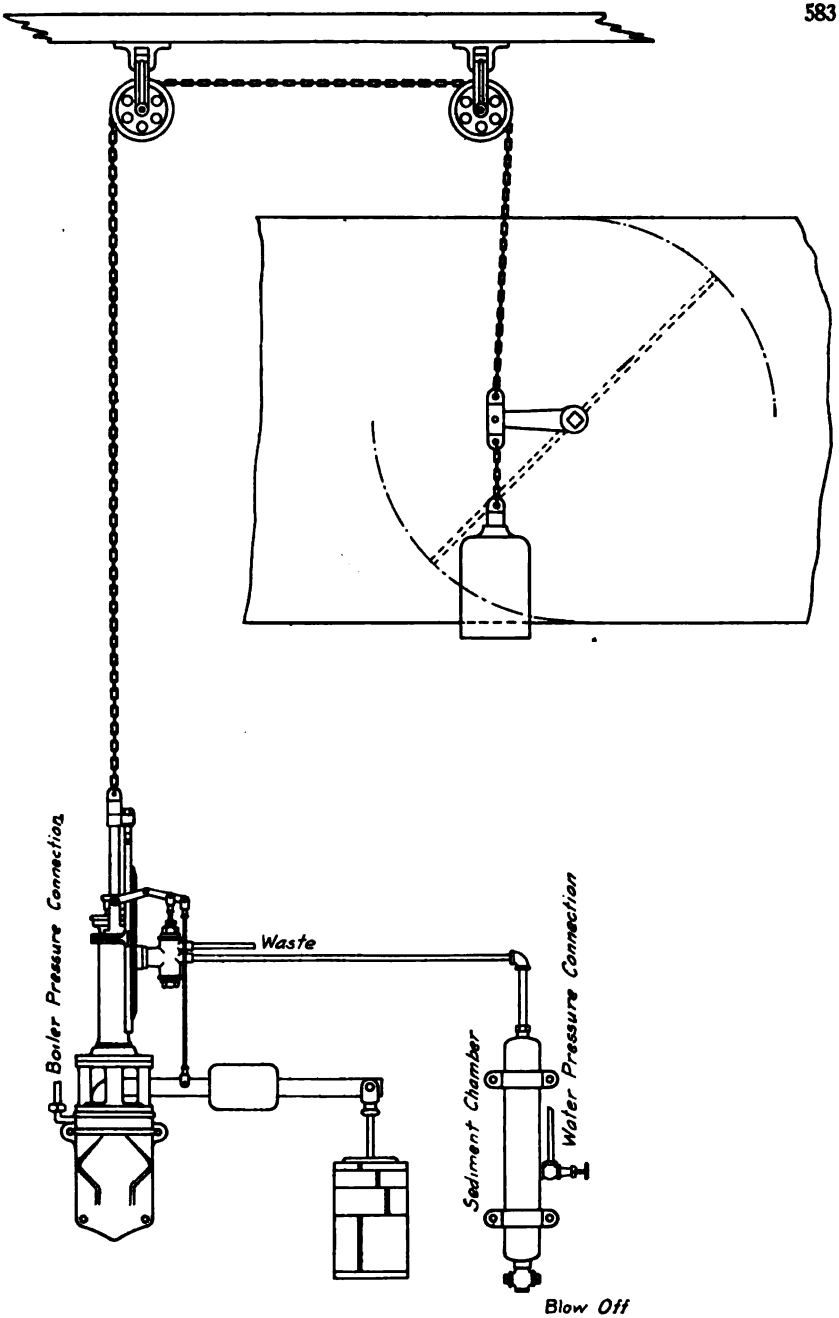

Fig. 251. Mason Damper Regulator.

Draft Regulation. Combustion can be controlled automatically by varying the supply of air or fuel passed through the boiler furnace. For natural draft the control is secured through movements of the breeching or stack damper. For forced draft, the supply of air can be varied also by varying the fan speed, or by adjusting a damper placed where the air enters the furnace.

The hydraulic damper regulator is used in natural draft plants. As shown in Fig. 251, this is operated by the variation of steam pressure in the boiler, but water pressure is used as motive power. The change in steam pressure moves a lever, which opens a pilot valve controlling the supply and discharge of water. The piston contained in the regulator cylinder is moved when water is admitted, the damper movement being controlled by connections from the piston stem. As the piston moves, it displaces the fulcrum of the pilot valve lever and closes the pilot valve. Consequently, the piston does not make a full stroke, but graduates the damper opening to the load.

In small forced draft installations, where the stoker and fan are driven by the same engine, both fuel and air supply can be controlled by the standard hydraulic regulator, according to the variations in steam pressure. In larger installations, when separate units drive the fan and stoker, the speed of the former can be controlled by a balanced valve on the steam line. The speed of the stoker engine can be controlled by the pressure in the wind-box.

When variable speed motors are used for the stoker or fan drive, they can be controlled automatically by rheostats operated from the hydraulic regulator.

In so called "balanced draft" systems it is the aim to keep the furnace chamber automatically at atmospheric pressure, and this is usually accomplished by means of a regulator with a relay which controls two hydraulic cylinders, one operating the air supply damper and the other the stack damper.

Economical Operation

WITHOUT suitable instruments and organization, it is impossible to tell whether the boiler efficiency is 50 or 75 per cent, or why it is so. Unless the management knows what should be done, it cannot reasonably complain that the boiler room force does not do it. The operation of generating steam should be investigated and controlled by intelligent planning, as much as is the case with other manufacturing operations.

Control Boards. The necessity of installing instruments for controlling combustion and boiler operation is gaining recognition and many modern plants have these assembled on an instrument or control board. These boards may be of two general types, the one containing instruments which serve a whole boiler room and the other containing instruments which serve only one individual boiler or battery. In small plants the first type is satisfactory, but in large plants the individual control board is to be preferred.

Such boards carry indicating and recording steam flow meters, recording pressure gage, recording thermometers for feed water, superheated steam, exit gases from boiler and from economizer, direct and differential draft gages with selecting valves, stoker and fan speed controls; and CO_2 recorders and indicating and recording water meters are nearby. The design and equipment of these boards is entirely dependent upon the particular conditions to be met.

A desk and chair should be provided for convenience in keeping a log, and in calculating, tabulating and comparing data.

Fig. 252 illustrates an instrument and control board with Venturi indicating, recording and integrating meter conveniently near.

Efficient Operation. With an installation of this kind, used with reasonable intelligence and enthusiasm, there is no reason why the boiler plant should not be run continuously under "test conditions."

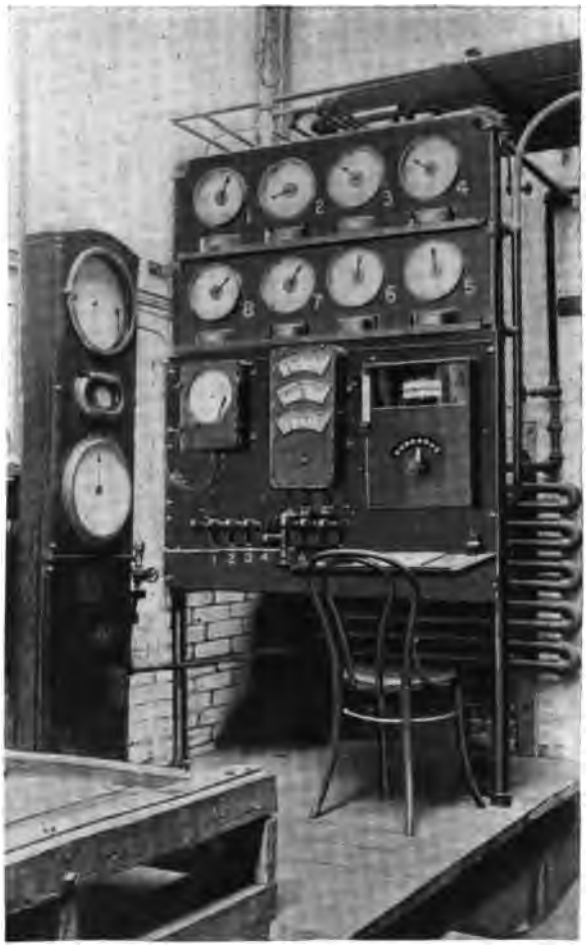

Fig. 252. Instrument and Control Board by W. N. Polakov and Co.

The control board shown in Fig. 252, combined with a course of training and assisting the boiler room force, and a system of secondary payment for actual economy effected, resulted in the following drop in cost of generating steam while the cost of coal rose 30 per cent and of labor nearly 50 per cent. The figures of Table 91 were supplied by *W. N. Polakov* as representative of a number of plants whose operation has been similarly improved.

Skenandoa Cotton Company, Utica, N. Y., equipped with 2028 H. P. of Heine Standard Boilers.

Table 91. Reducing Cost of Generating Steam.

1919 Month	Total Cost	Total Weight of Steam Generated	Cost of 1000 Lbs. of Steam
January	$24,086.27	25,381,000	$0.951
February	22,345.38	23,400,000	.953
March	21,895.90	24,571,000	.693
April	18,985.05	29,741,066	.637
May	16,340.47	26,900,000	.572
June	18,142.36	26,476,000	.685
July	16,987.25	36,127,000	.468
August	18,983.40	36,166,000	.525
September	16,384.33	33,527,000	.488

Measuring Water

THE principal methods used for measuring water are given in outline form in the following table:

Table 92. Methods of Measuring Water.

General Method	Examples
Gravimetric or Actual Weighing	Tanks and Scales Tilting Weighers
Volumetric Displacement	Tanks Tank Meter Piston Type Meter Rotary Type Meter Disk Type Meter
Weirs	V-Notch Cycloidal Trapezoidal
Velocity of Flow	Venturi Tube Orifice Pitot Tube Pitometer

The volumetric and gravimetric methods are accurate and useful when the flow does not need to be continuous. When the liquid must flow in a continuous stream, the pitot tube, orifice, venturi tube, or weir methods must be employed. The first three of these can be conveniently and quickly applied for measuring liquids flowing in closed pipes under pressure. In these three methods, however, the pressure is the factor actually measured, and it varies as the square of the rate of flow. Accuracy is secured therefore only for flows between the maximum for which the instrument is designed and say ⅓ or ½ of this maximum. At smaller flows the head is extremely small, and any friction in the moving parts of the instrument introduces a serious error.

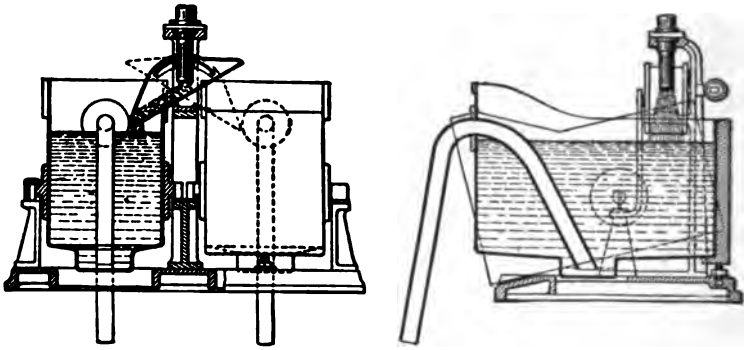

Fig. 253. Worthington Water Weigher.

Fig. 254. Hammond Volumetric Meter.

The plain orifice, either submerged or discharging into free air, presents the same difficulty at small heads. The ordinary rectangular weir is better, but each size of weir requires a different device for converting head to flow in a recording and integrating instrument. In the V-notch or triangular weir, the cross-section of the issuing stream is a similar figure at all heads, so that the relation of flow to head is fairly constant.

Gravimetric meters depend upon the actual weighing of the water. Two tanks are arranged so that they can be filled until a definite weight is balanced. They are then dumped alternately, a record being made of the number of dumpings. This same method is used in testing work, except that the tanks used rest upon platform scales. Fig. 253 shows a gravimetric meter.

Fig. 255. Valve Gear of Hammond Volumetric Meter.

The Hammond volumetric meter, made by the Alberger Pump and Condenser Co., is illustrated in Fig. 254 and 255. Two chambers are alternately filled and emptied, and the cycle recorded on a counter. The valve gear is operated by the pressure exerted on the discharge valves and timed by the movement of the floats; and it swings the guide which directs the water into either of the compartments. The valve gear is shown in Fig. 255. An outstanding feature is the ease with which the vital parts can be seen and the accuracy of operation checked. For instance, a needle gage is provided for each compartment, and this may be observed at any time to see that the gear trips exactly at the right level. The error between zero and maximum rated capacity is guaranteed to be within ½ of 1 per cent.

In a V-notch meter designed primarily for use with open feed-water heaters (see Fig. 168, page 325), a float operates the recording and integrating mechanism. The motion of the float is communicated to a cylindrical drum, which is attached to a disk provided with a spiral slot. This slot forms a cam, the motion of which is imparted through a follower to the indicating, recording and integrating mechanism. The meter and recorder shown in Fig. 168 is accurate to within less than 1½ per cent.

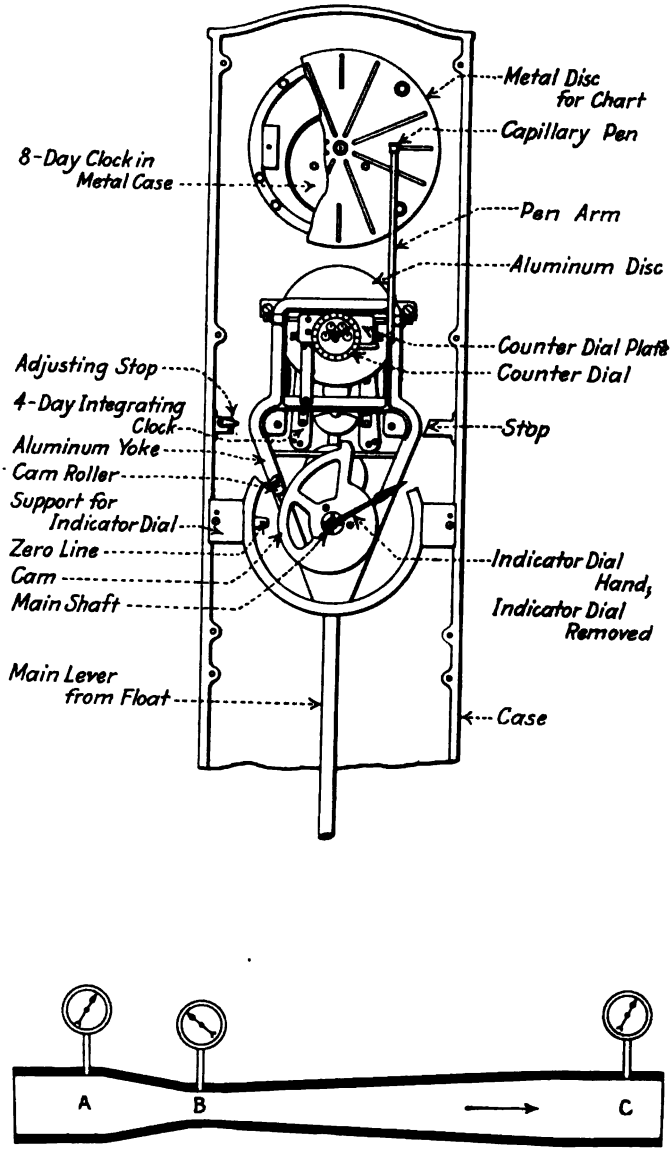

Fig. 256. Venturi Metering Tube and Measuring Mechanism.

The theoretical discharge over a V-notch weir is given by the formula

$$Q = \left(\frac{8}{15}\sqrt{2g} \times s\right) H^{5/2} \tag{71}$$

where Q = discharge in cu. ft. per sec.
H = height of water above bottom of notch
B = half the breadth of notch at water level
s = slope of the notch, or the quotient B/H.

For a right-angled notch, the slope s becomes unity. Combining a coefficient of discharge with the constant part (assuming g to be constant) of the above equation, the formula for discharge over a right-angled V-notch weir with sharp edges may be written

$$Q = C H^{5/2} \tag{72}$$

H. W. King made a thorough investigation at the *University of Michigan*, supplemented his results by the experiments of *Thompson and Barr*, and deduced the following expression as the mean of experimental results:

$$Q = 2.52\, H^{2.47} \tag{73}$$

Venturi meters for measuring hot water are generally made in from 2 to 12-in. sizes. Fig. 256 shows a typical arrangement of meter tube and measuring mechanism. The meter actually registers in gallons, but is usually calibrated to read in pounds. Table 93 shows the measuring capacities of standard meter tubes. For hot water, extra heavy meter tubes with American Extra Heavy Standard flange ends are usually selected. The meters are graduated for a standard temperature of 62 deg., so that the correction curve furnished by the manufacturers must be used for other temperatures. If the meter tube is placed in a pipe line subject to pulsations from the pump, an air chamber must be installed.

The formula for measuring the flow of water through a Venturi meter (Fig. 256) is

$$Q = C a \sqrt{\frac{2gH}{\left(\frac{A}{a}\right)^2 - 1}} \tag{74}$$

where Q = discharge in cu. ft. per sec.
C = a constant, usually taken as 0.97, but *Goodenough* gives 0.98 for the meters now on the market
A = area in sq. ft. at entrance to meter (A)
a = area in sq. ft. at throat (B)
H = difference in heads at entrance (A) and throat (B), respectively.

In the flow meter shown in Fig. 257, either a pitot tube or an orifice is inserted into the pipe where the flow is to be measured. The pressure differences created by the flow are transmitted to a murcury column in the meter body. The rise and fall of this column are made to engage and disengage conductors which vary the electrical current flowing through a circuit. The measuring mechanism is included in this circuit. The indicating, integrating and recording mechanism really measure electrical quantities, although these are proportional to similar quantities (flow, amount, etc.) for the fluid passing through the pipe.

United States Court House, Post Office and Custom House, Cleveland, Ohio, equipped with Heine Standard Boilers. Custom Houses at New York City, Baltimore, Pittsburgh, Cincinnati, Indianapolis, San Francisco and Kansas City, Mo., are also equipped with Heine Standard Boilers.

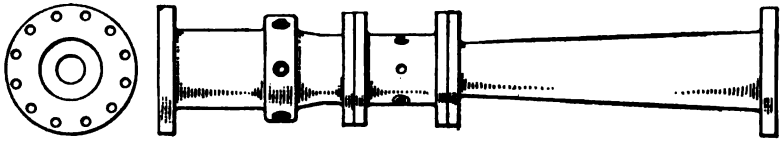

Table 93. Measuring Capacities of Venturi Hot Water Meters.

Pipe Diameter, Inches	Length of Meter Tube		Length* of Inlet Pipe, Ft.	Boiler Horsepower (30lb. per hp. per hr.)		Water Flow, Pounds per Hour		Water Flow, Gallons per Min.	
	Ft.	In.		Minimum	Maximum	Minimum	Maximum	Minimum	Maximum
	1	11⅞		45	590	1,360	17,600	3	35
2	1	10¼	2	65	850	1,960	25,400	4	50
	1	7		115	1,500	3,470	45,100	7	90
	2	4⅝		85	1,150	2,660	34,500	5	70
2½	2	3	2	115	1,500	3,470	45,100	7	90
	1	11¾		180	2,350	5,420	70,400	11	140
	2	11		115	1,500	3,470	45,100	7	90
3	2	7¾	2	180	2,350	5,420	70,400	11	140
	2	4½		260	3,380	7,820	102,000	16	205
	4	3¾		180	2,350	5,420	70,400	11	140
4	3	10⅞	3	305	4,000	9,170	119,000	18	240
	3	6		465	6,000	13,900	181,000	28	360
	5	1⅜		305	4,000	9,170	119,000	18	240
5	4	8½	3	465	6,000	13,900	181,000	28	360
	4	2		725	9,400	21,700	282,000	43	560
	5	11		465	6,000	13,900	181,000	28	360
6	5	4½	3	725	9,400	21,700	282,000	43	560
	4	10		1,040	13,600	31,300	406,000	63	810
	7	6¼		870	11,300	26,500	344,000	53	680
8	6	11¾	4	1,230	16,000	36,600	476,000	73	950
	6	2		1,850	24,100	55,600	722,000	111	1,440
	9	4¾		1,230	16,000	36,600	476,000	73	950
10	8	7	5	1,850	24,100	55,600	722,000	111	1,440
	7	6		2,900	37,600	86,900	1,129,000	174	2,260
	11	0		1,850	54,200	55,600	722,000	111	1,440
12	9	11	6	2,900	37,600	86,900	1,129,000	174	2,260
	8	10		4,200	54,200	125,000	1,626,000	250	3,250

*This column gives the minimum lengths of straight inlet pipes. Gate valves or other fittings to disturb the smooth flow of water should not be inserted in these pipes.

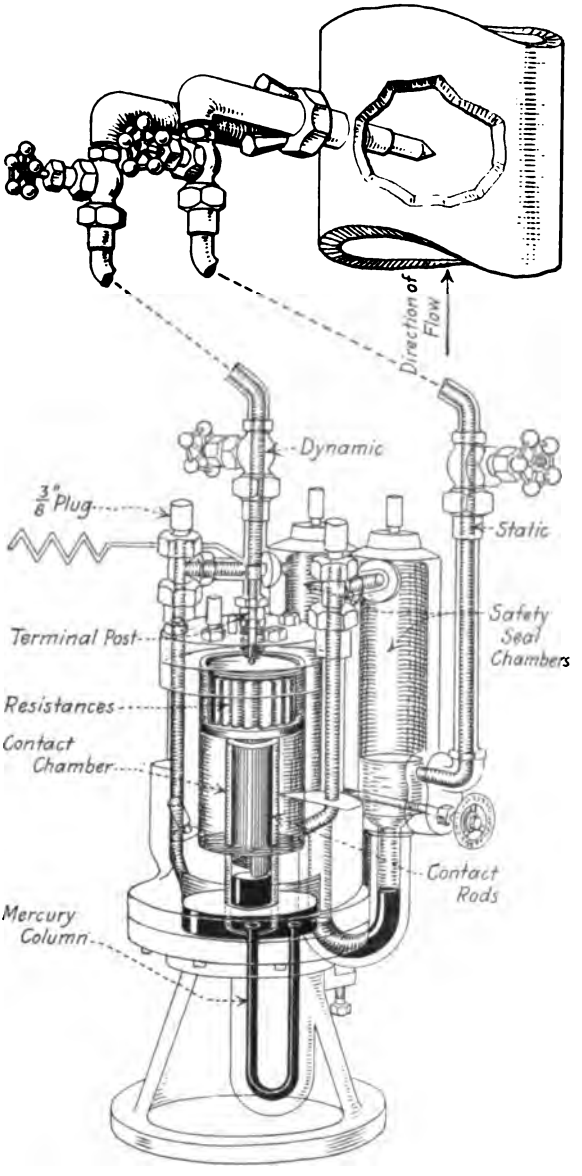

Fig. 257. Republic Flow Meter for Measuring Water or Steam.

Practically all of the so-called flow meters on the market are applicable with certain modifications to either steam or water measurement. Other types of flow meters are described under "Metering Steam."

Metering Steam

MOST practical steam meters are based upon one or the other of two principles, both depending on the velocity of flow. Either there is a constriction inserted in the steam pipe so as to cause a small pressure difference, which will vary with the amount of steam passing, or the velocity of the flowing steam is measured by a pitot tube, or else the steam in flowing through an orifice impinges against a movable part which assumes different positions for different rates of flow.

The actual measuring instrument can be placed at any convenient distance from the steam pipe and is connected to it by two small copper tubes filled with water of condensation. These tubes transmit the differential pressure to the instrument. The latter can either indicate on a dial or scale the rate of flow of the steam at any instant, or record the rate of flow graphically on a chart, or integrate numerically by means of a counting mechanism the quantity which has passed in any given time. All these functions can be combined in one instrument.

In instruments using the constricted-pipe principle, the quantity of steam passing per unit time is taken as being directly proportional to the square root of the difference of pressure on the two sides of the constriction. This proportion holds, however, only if the pressure and the superheat of the steam are constant. In the simplest form of pitot apparatus, two tubes are inserted through the side of the steam pipe, one being cut off flush with the inner wall of the pipe and the other bent so that its open end faces the flowing steam. Both tubes are submitted to the static pressure of the steam, but the bent one measures also the dynamic pressure due to the velocity. The difference in pressure in the two tubes is therefore a measure of the rate of flow and can be employed to operate an instrument. The disturbance of the flow due to the presence of the pitot tube itself must be reckoned with.

An alternative to the fixed orifice consists of a variable orifice designed to create a constant pressure drop. The steam passes upward through the seat of an automatically lifting valve, which is held in a higher or lower position according to the rate of flow. A lever mechanism connects the valve with the pointer of the instrument. At low velocities the forces acting are so small that the readings are unreliable. In instruments depending upon the drop of pressure across an orifice, this difficulty can be overcome either by inserting a smaller orifice, or by using a butterfly valve which can be locked in one of several positions according to the rate of flow. Thus the range of the instrument can be altered without interfering with the steam pipe. In every type of instrument referred to, however, accurate metering is difficult when the density of the steam varies.

The best steam meters working under commercial conditions are correct within plus or minus 2 per cent at loads ranging from three-quarters to full load. At half load the accuracy will be within 2½ per cent, and from one-quarter to one-sixth load it will be within 4 per cent. Such accuracy can be obtained only by calibrating each instrument under conditions similar to those under which it will have to work.

In the simplest instruments, namely, those that merely indicate the rate of flow at an instant, the differential pressure acts upon liquid in a U-tube, the liquid rises in one limb and indicates by its height the rate of flow. This is read off a graduated scale placed alongside the liquid column. Water is sometimes used as the indicating liquid, partly on account of the ease with which it is automatically supplied by condensation, and partly because of the open scale obtained with small pressures. Mercury, however, is frequently adopted.

1500 H. P. of Heine Standard Boilers equipped with Laclede-Christy Chain Grate Stokers installed in the Duncan and Newstead Avenues plant of the Polar Wave Ice and Fuel Co., St. Louis, Mo. This company has installed 4250 H. P. of Heine Standard Boilers.

The instrument shown in Fig. 261 uses the orifice principle at a constant difference of pressure, the size of orifice being varied to allow different amounts of steam to pass. This is accomplished by a float set in the orifice, so shaped that its motion changes the effective area of the orifice. The float movement is transmitted to an arm carried by a horizontal shaft projecting through the casing, and carrying, at its outer extremity, the recording pencil and indicator pointer.

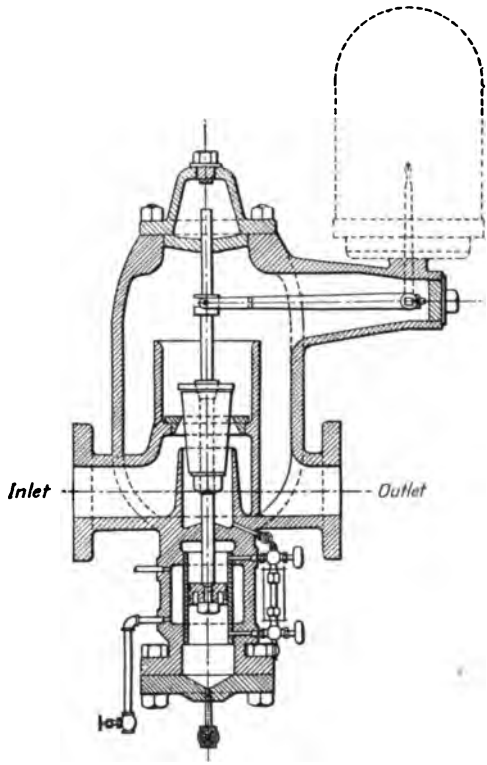

Fig. 261. Mechanism of Variable Orifice Type of Steam Flow Meter.

Some of the instruments used to measure water (see Fig. 257) can also be used to measure steam. In the latter service, however, a condenser must be used so that the steam does not come directly into contact with the internal mechanism of the instrument. In some designs the steam flow meter is combined with other instruments. Fig. 262 consists of a steam flow meter, to record the amount of steam generated; an air flow meter, to record the amount of air supplied to the furnace; and a recording thermometer, to record the temperature of the uptake or the escaping chimney gases. All these readings are shown on a single chart. The steam flow is measured by the use of a special orifice, placed between two flanges in the pipe line, and corrugated to form its own gasket. Holes are drilled on either side of the flange in which the orifice is inserted, and are connected with the pressure recording device in the instrument. The air flow part of

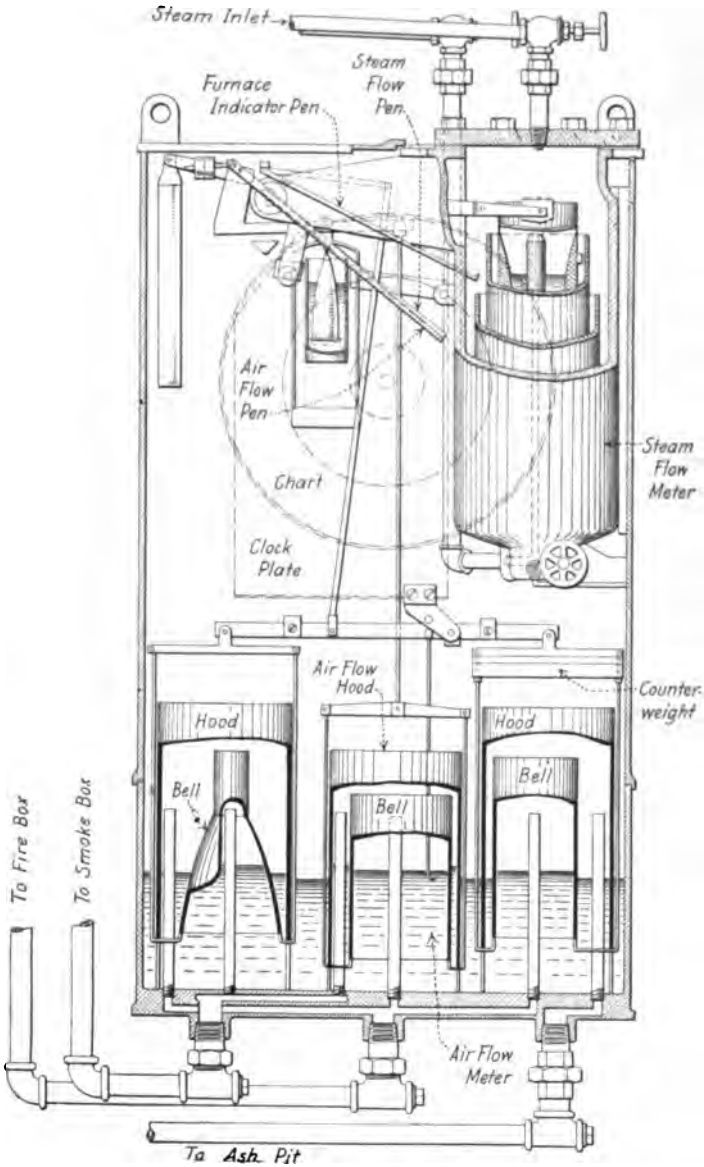

Fig. 262. Diagramatical Sectional View of Bailey Boiler Meter showing Pipe Connections and operation of Meter.

the meter is operated by the difference between pressures in fire box and in smoke box. The flue gas temperature is obtained by the aid of a nitrogen-filled bulb, extending across the path of the gases where they leave the boiler heating surface. The average temperature of all gases is thus obtained, and the condition of the boiler heating surface and baffles can be checked. The record of steam flow is made in red ink, and that of air flow in blue ink. The latter is calibrated so that under ideal conditions the blue and red records coincide on the chart. When the air flow pen reads more than the steam flow, there is an excess of air passing, and when it reads less, the air supply is insufficient; thus improper conditions can be easily rectified.

Weighing Coal

THE equipment for this work may be divided into three classes—that for weighing the coal received, that for weighing the total amount of coal consumed, and that for weighing the coal consumed by each boiler unit.

For checking the amount of coal received at a plant, there are several types of equipment,—track scales, wagon scales, weighing hoppers with hand-operated or automatic scales, conveyor weighers, and coal meters. For determining the quantity of coal used each day in a boiler room the same types of weighing or measuring devices can be used, and also the movable weighing hopper or traveling larry equipped with scale.

Track scales are set in the car track so that a section of the rails is carried by the scale platform, and the railroad cars can be run upon the platform and weighed. The wagon scale is similar. The coal may be handled in small hand-operated industrial cars, automatic railway cars, or cars operated by electricity or a cable system. Track scales can be provided to weigh the coal handled by such cars, and if the amount handled justifies the expense, the scales can automatically record the weight as the car passes over the scale platform without stopping. The recording device of one of these scales consists of a wheel having the numbers in type on its periphery, and when a lever is moved by the attendant or is tripped automatically as the car passes over the platform, the wheel revolves a distance depending on the weight, and then prints the amount on a tape which is fed from one roller and wound up on another. The weights of the different loads are thus recorded on the tape, which can be taken off whenever desired.

Track scales are also used for overhead tracks, usually of the monorail type. A separate section of rail or rails is supported on the scale beam so that the larries or trolleys carrying the loads can be stopped and weighed, or if an automatic recording scale is installed, the loads can be weighed as they pass over this section of track.

Fig. 258 illustrates an automatic receiving scale of 75 tons hourly capacity. This type of scale is very satisfactorily adapted to use in those plants where track scales cannot be installed. It operates by the gravity of the coal which must be delivered from some point above the scale, and thus can take its charges from a hopper, bunker, elevator or conveyor and discharge into a hopper, chute, conveyor or elevator boot, depending upon the service required and the local conditions of handling.

A crusher is necessary to reduce run of mine coal to reasonably uniform sizes for the successful operation of an automatic hopper scale. Where this is not done, or where coal is handled on a belt, bucket or pan conveyor, a conveyor scale is applicable, and is recommended where head room will not admit of a hopper scale. In one type of conveyor scale a section of the conveyor is suspended on a floating platform balanced through a compound leverage system by an iron float in a cylinder of mercury. For varying weights, the float takes up different positions, and its movement offers a direct measure of the actual weight on the floating platform. An integrating device is used to multiply the weight by the speed of the conveyor.

Installation of 2500 H. P. of Heine Standard Boilers in the Ridgewood Pumping Station, Brooklyn, N. Y.

Fig. 258. Richardson Automatic Receiving Scale.

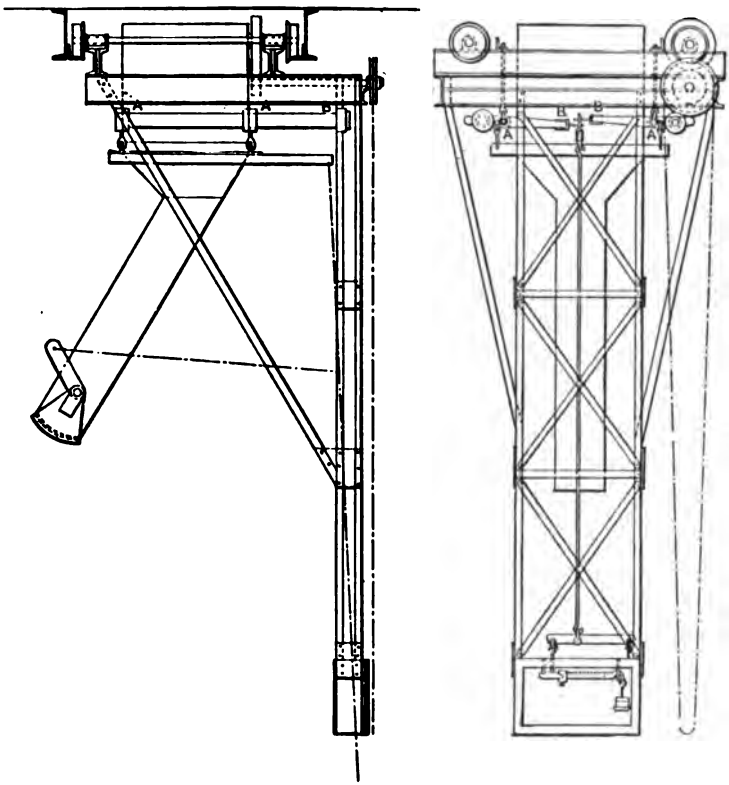

Fig. 259. Traveling Weigh Hopper.

For keeping a record of the coal used under each separate boiler the devices ordinarily employed are the automatic scale and the coal meter. The automatic scale may be stationary if the coal bunkers are located above the boiler fronts or may be installed on a traveling larry if the coal bunkers are located at the ends of the firing aisle. When stationary, each individual scale is mounted on a frame directly beneath the overhead bunkers from which it receives the coal; and it discharges the coal after weighing, into the spout which leads down to the stoker hopper.

Fig. 259 illustrates a traveling larry, which consists of a four-wheeled carriage or truck, upon which is mounted a hopper and scale. The truck moves upon an I-beam track by hand operation of the chain wheel geared to one truck axle. The scale beam is located so as to be balanced and read from the floor. In large central stations where traveling larries are used. they are usually driven by an electric motor and equipped with automatic scales. The operator rides in a cage on the larry and keeps a record of the coal delivered to each boiler.

The spouts leading from the overhead bunkers are sometimes fitted with a helical vane, Fig. 260, which is calibrated so that its rotation is a guide of the amount of fuel used by each boiler. The rotation of the vane is transmitted by shafts and gears to a counter registering on a dial.

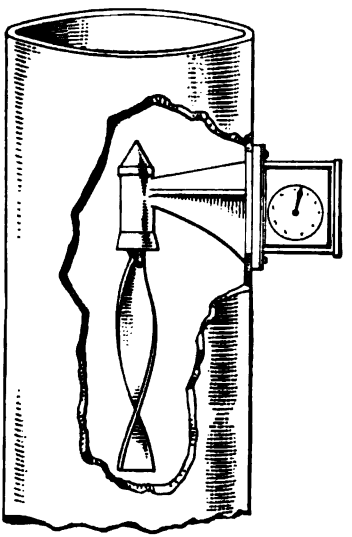

Fig. 260. Coal Meter of the Helical Vane Type.

When stoker fired, the amount of coal used by each boiler may be roughly determined by installing revolution counters on the stoker shaft. With chain grate stokers the r.p.m. of the stoker sprocket must be used in conjunction with the depth of fire and width of grate to get a rough check on the coal consumption. In underfeed stokers of the Riley, Taylor or Westinghouse type, about 17 to 18 lbs. of coal per retort is fed to the furnace with each revolution of the crank shaft.

Handling Coal

THE handling of coal and ashes resolves itself into the following stages: (1) Unloading of coal as received, either by land or water; (2) Its transfer to bunkers or other storage; (3) Its movement to boilers ready for firing; and (4) Removal and final disposal of ashes.

Unloading of Coal. When the plant is not large enough to warrant a railroad siding the coal is delivered by truck and unloaded by hand. If bottom-dumping cars are available, the coal can be discharged directly into hoppers or into the storage space provided. With water delivery a clam-shell bucket, operated by a locomotive crane or from a tower, can be used to move the fuel from the barge.

Methods of Storing Coal. In small plants the coal may be stored in bins, bunkers or piles inside the boiler room; but in larger plants the quantities of coal used each day are so large that the inside bunkers hold only a few days' supply and outside storage is necessary.

A convenient storage system often employed is that in which the storage space is adjacent to the boiler room and the whole served by a continuous bucket conveyor. This bucket conveyor runs horizontally in a tunnel beneath the coal storage space and boiler room floor, rises vertically at the far end of the boiler room, returns horizontally on a bridge over the boiler coal bunkers and outside storage space and finally descends at the outer end of the storage pile to the tunnel, thus completely encircling the boiler room and storage. Chutes below the coal storage bin deliver the coal to the

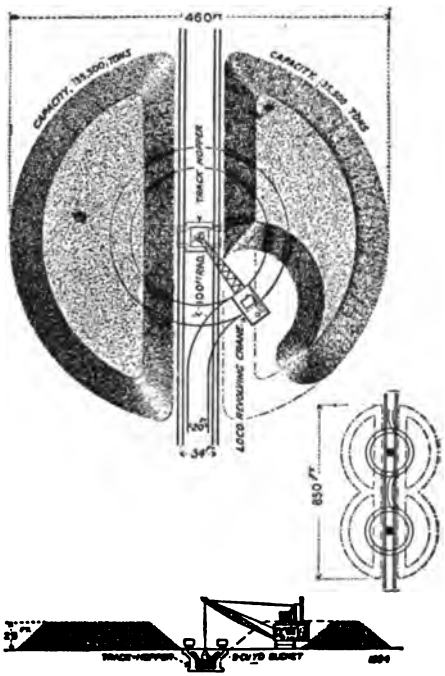

Fig. 263. Circular Coal Storage System.

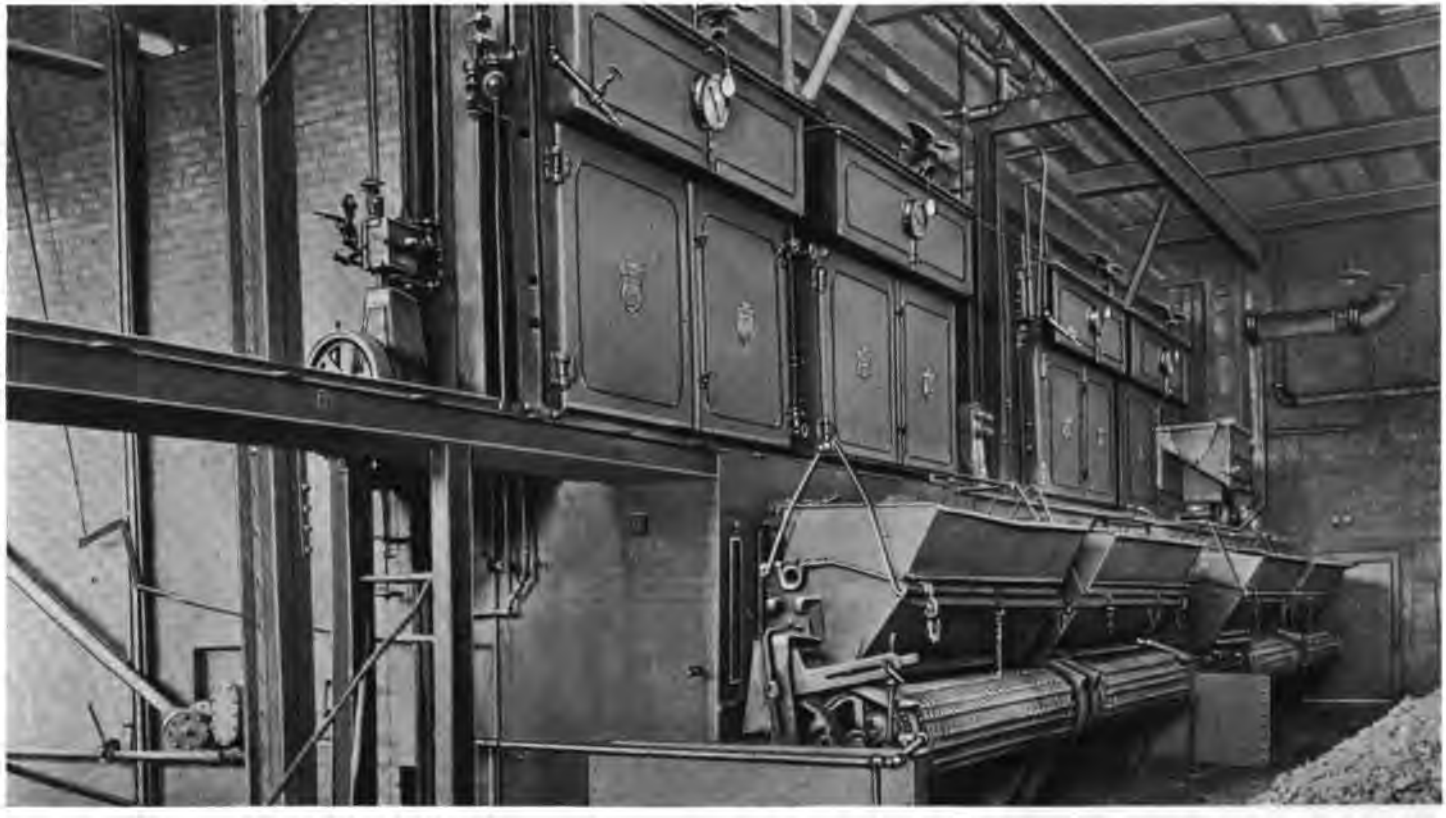

1624 H. P. installation of Heine Standard Boilers set over Green Chain Grate Stokers.
General Hospital No. 21 of the United States Army, Aurora, Colo.

buckets, which then carry it up above the boiler bunkers where a tripping device overturns the buckets and discharges the coal to the bunkers. A continuous bucket conveyor installation of this type usually handles ashes as well as coal.

The Circular Storage System, Fig. 263, is often used for storing coal for power plant use and is suitable for capacities ranging from 5000 tons up. It consists of a long radius locomotive crane equipped with self-filling bucket, running on a circular track around a central track hopper into which coal is dumped from railroad cars. The coal to be stored is taken from this central pit or hopper by the bucket and delivered to the pile. This system has a handling capacity of from 40 to 250 tons per hour, according to the size of the bucket and crane employed.

Rectangular Storage. A few large plants store their coal in a pile spanned by a traveling bridge. The coal is received in hopper bottom railroad cars which discharge into a pit running lengthwise of the pile, from which it is removed by a grab bucket operated from the bridge and placed on the storage pile. The capacity of a storage of this type is determined by the span of the bridge and length and height of pile. Economical handling capacities of storage systems of this type are from 100 to 300 tons per hour.

Submerged Storage. Bituminous coal which is subject to spontaneous combustion is sometimes stored under water. Storage bins for this purpose may be constructed of concrete, the inside surfaces being treated with a waterproofing compound. A 6000 tons submerged storage pit has been constructed by the Omaha Electric Light and Power Company. The pit is built of concrete with walls 22 ft. high on three sides. The fourth wall is 16 ft. higher and serves as the support for one rail of the crane runway. The other rail is carried by a girder along the side of the power house. Two 50-ton receiving hoppers, also of concrete, are located at the power house end of the submerged storage.

The storage and spontaneous combustion of bituminous coal are discussed on page 466.

Transfer of Coal from Storage to Boiler Room. Where mechanical storage systems are in use, the transfer of the coal from storage pile to car is accomplished by means of grab buckets operated from locomotive cranes or bridges as described above. However, where mechanical storage systems are not used, and where storage piles are at some distance from the boiler room, portable loaders are used to transfer the coal from pile to car or wagon. These loaders may be either of the bucket or belt type and may be driven by electric motor or gasoline engine.

Coal can be transferred to the boiler bunkers by small hand or power-operated cars, or by a conveyor system. Conveyors may be of several different types, the selection depending upon the conditions.

Screw Conveyors may be used for horizontally conveying coal of ¾ inch or less, a distance of 100 or 150 ft. The conveyor or screw consists of sections of a stamped or rolled steel helix mounted on hollow steel shafting, carried by hangers. The screw, which is driven by gears or sprockets at one end, revolves in a steel box through which the fuel is conveyed.

Scraper or Flight Conveyors may be used for conveying fine sizes of coal horizontally or on inclines up to about 45 degrees. Single strand conveyors of this type consist of a single chain to which are bolted steel flights or plates. Double strand conveyors have the flights suspended from two chains, and are used when the conveyors are long and subjected to heavy service. Either type may be equipped with sliding blocks or rollers. The troughs through which the coal is conveyed are made of steel plate or of wood lined with plates.

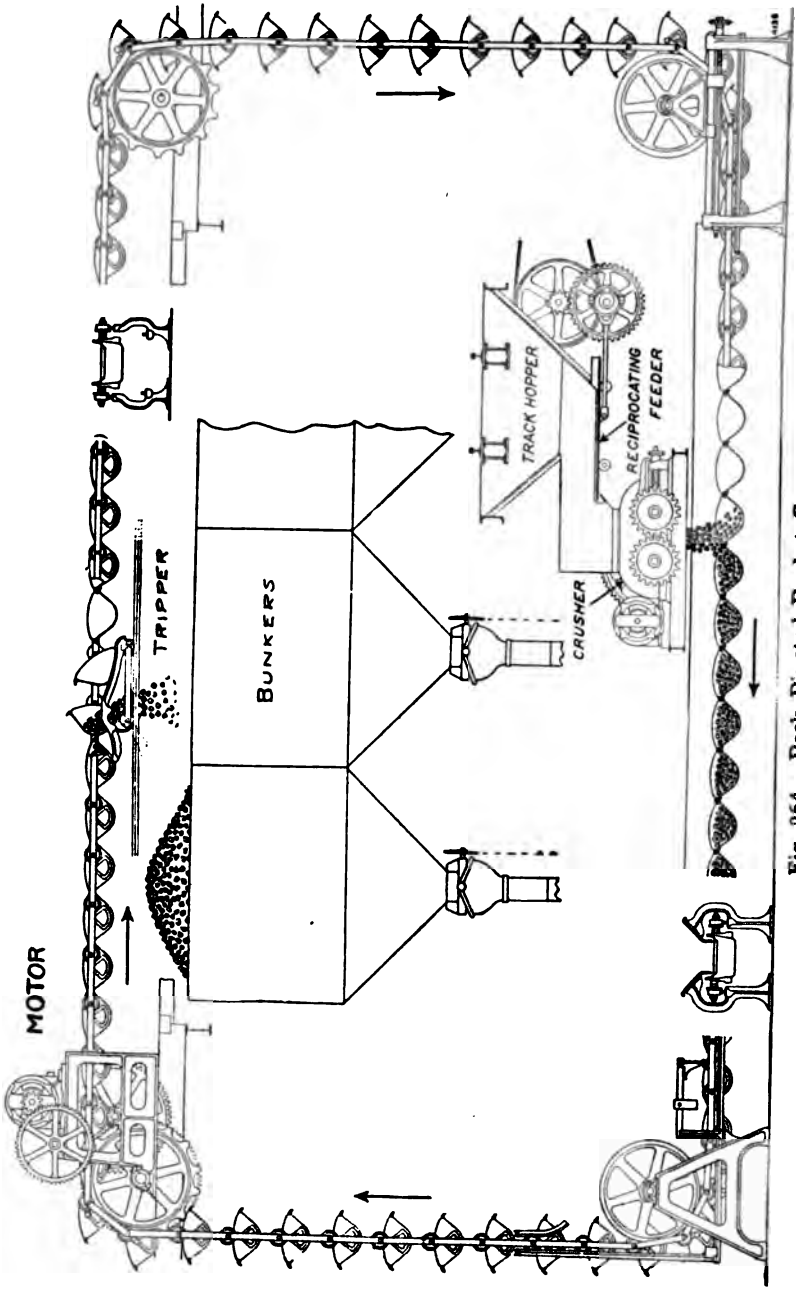

Fig. 264. Peck Pivoted Bucket Conveyor.

Apron Conveyors are often used for conveying coal horizontally or on inclines up to about 30 degrees. Larger sizes of coal may be handled with this type than with screw or flight conveyors. The apron conveyor consists of two strands of roller chain separated by overlapping apron plates with sides from 2 to 6 inches high. These apron plates carry the coal; and as the coal is carried instead of being dragged, less power is required and maintenance costs are less than with scraper or screw conveyors.

Pivoted Bucket Conveyors. Fig. 264, are frequently used in power plants. Their use in handling coal from storage to bunkers is discussed in a previous paragraph. This type of conveyor will handle comparatively large sizes of coal at capacities ranging from 15 to 200 tons per hour.

Belt Conveyors will handle coal satisfactorily on horizontal runs or on inclines up to 20 degrees at capacities up to 500 tons per hour. This type of conveyor, Fig. 265, consists of an endless belt driven by suitable pulleys and carried upon idler pulleys so arranged that the "carrying" side of the belt becomes trough-shaped in cross-section. The loaded or carrying side may

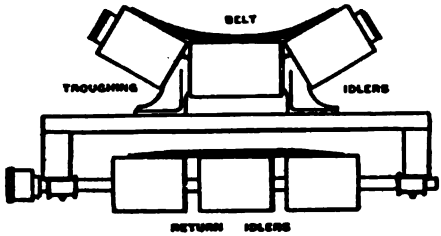

Fig. 265. Belt Conveyor.

be supported by three or five troughing idlers as may be required, while the empty side is carried on straight return idlers. The idlers are carried by iron or wooden stands, spaced from 3 to 6 ft. centers on the troughing side, and from 6 to 12 ft. on the return side. The belts generally used consist of plies of cotton duck cemented together with a rubber compound and protected from moisture and abrasion by a rubber cover. Tripping devices placed at the required points discharge the coal from the belt. These trippers are mounted on a carriage and consist essentially of two pulleys, one above and slightly in advance of the other, so that the belt runs over the upper one and under the lower one, thus throwing the coal into a chute on the first downward turn of the belt. The trippers may be fixed so that the coal will always discharge at one point, or movable when it is desired to discharge the coal into different bunkers. Movable trippers may be propelled by a hand-crank or automatically propelled by gearing.

Coal Crushers. When coal is handled by screw or scraper conveyors it is necessary to crush the coal down to about ¾ inch size. Belt or bucket conveyors will satisfactorily handle larger sizes.

Coal crushers are generally installed beneath or adjacent to the receiving hoppers, see Fig. 263.

A type of crusher satisfactory for reducing run of mine bituminous coal to a size suitable for stoker use, consists of two rolls provided with solid cast steel or renewable steel teeth. The rolls are mounted in a heavy frame and are gear driven. Relief spring bearings are provided for one of the rolls, so that they may separate in case tramp iron enters the crusher.

Coal Bunkers are generally overhead when mechanical coal handling systems and stokers are installed. Usually, overhead bunkers should hold not less than one day's supply of coal. In large stations where there are no facilities for outside storage, the overhead bunkers may hold as much as a ten days' supply.

Coal bunkers may be arranged so that each boiler or each battery has its individual bunker, or there may be one continuous bunker for all the boilers. Catenary, parabolic and V-shaped bunkers are generally of the continuous type. The angle of repose of coal varies from 35 to 40 degrees; but due to convenience in fabricating, the 45 degrees slope is generally used for hopper bottoms. Overhead bunkers may be constructed of unlined steel plate, of structural steel lined with concrete or of reinforced concrete.

Down spouts with a shut-off gate convey the coal from the bunkers to the firing floor or the stoker hoppers.

Where overhead bunkers are not installed immediately over the boiler, traveling larries, Fig. 258, or traveling buckets, carry the coal from the distributing bunker or coal storage to the boiler fronts.

Ash Handling Systems

IN all boilers the ashes are either raked out onto the firing floors or are dropped into ash pits. The design and construction of ash pits of different types of boiler settings is discussed in Chapter 4 on FURNACES AND SETTINGS.

The pits often discharge into small push or electric cars, which carry the ashes to a conveyor or elevator system, from which they are carried to the ash bunkers. The coal handling system is used sometimes for carrying ashes, although it is considered that the two should be separated, because of the abrasive action of the ashes. When the systems are combined, the pivoted-bucket conveyor has the advantage that the parts can be replaced easily as they wear or corrode.

The bucket and chain elevator, with rigid buckets, is a common method of elevating ashes. The ashes are fed into a boot forming the bottom part of the elevator, are scooped up by the buckets and carried inside a casing to the top of the elevator, where they are discharged into a spout leading to the point of disposal. This may be an ash bunker, a truck or a railroad car.

The skip hoist is another well known method of ash removal; it consists of a bucket running on inclined or vertical tracks, and hoisted by a steel cable attached to a motor-driven winding machine. The bucket and chain elevator is recommended for small plants, where the lift is 40 ft. or less. For larger plants the skip hoist is said to have the advantages of simplicity, low power consumption, and ability to handle the large clinkers often produced by forced draft stokers at high overloads.

Pneumatic Ash Conveyors. These consist primarily of a pipe through which a current of rapidly moving air carries the ashes to any desired point. Inlets to receive the ashes, consist of tees which are plugged when not in use; and are provided wherever convenient, such as in front of the ashpits. The conveyor may discharge onto the ground or into a hopper from which cars and wagons may be filled. The commencement of the pipe should have an open end, so that there is an ample flow of air along the pipe at the first ash inlet.

In vacuum conveyors, a vacuum is produced in a closed tank, either by means of a motor-driven or a steam jet exhauster. When steam-jets are used, they may either be arranged to exhaust from a hopper as just described, or may be introduced at some point or points after the last inlet, generally at a bend in the conveyor pipe. Steam-jet conveyors may either discharge into the open or into vented tanks.

Since the ash travels at a high velocity, the abrasive action is considerable, especially at changes of direction. Therefore, bends are provided with easily replaceable "wearing-backs," and the ash is generally discharged against some form of target to protect the hopper wall.

Fig. 266 shows one end of the boiler room of No. 2 plant of the Heine Company. The inlets of the ash conveyor are flush with the firing floor, and offer no impediment when closed. The ashes are removed very rapidly and the boiler room is kept free from dust and dirt.

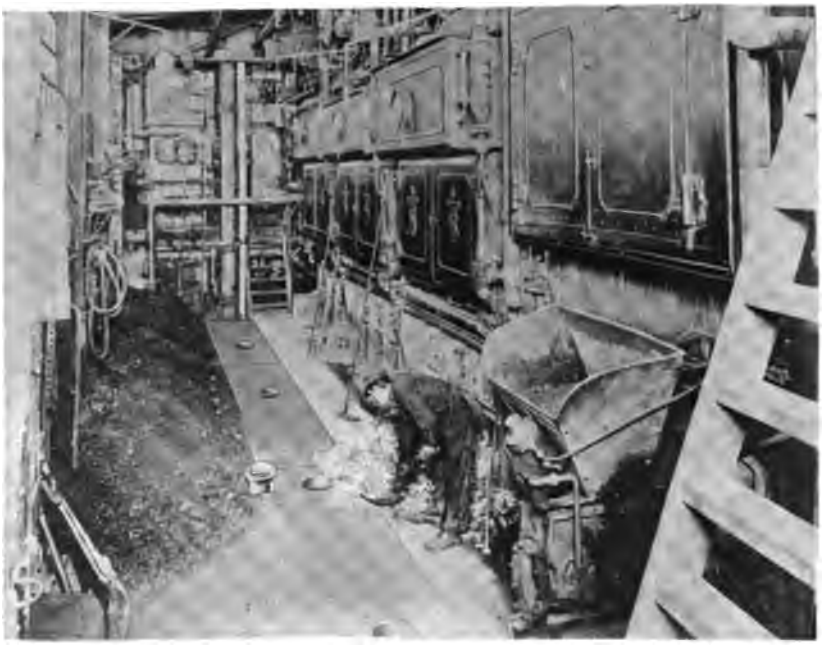

Fig. 266. Detrick-Hagan Steam-Jet Ash Conveyor.

With hopper ashpits, the conveyor pipe may be laid on the basement floor or hung from the underside of the firing floor as is most convenient. Connections may also be made to the combustion chambers.

Clinkers should be broken up and ashes and dust should be dry when fed to the conveyor to avoid clogging, particularly at bends. Water sprays are frequently placed in the conveyor pipe near the discharge end, or in the ash tank.

Steam-jet conveyors are less noisy than vacuum systems with a steam-jet exhauster drawing from the ash tank. It is difficult to muffle these latter, owing to the abrasive or "sandblast" action of the fine dust quickly perforating metal baffles.

Flumes. In some plants where there is a plentiful supply of water, flumes are constructed beneath the boiler setting, into which the stokers discharge their refuse. A stream of water flowing through the flume washes the ashes into a pit from which an elevator discharges them to a railroad car or wagon.

The ash bins used with mechanical conveying systems may be made of steel, concrete-lined, or of concrete on a steel skeleton. On account of the corrosive action of the wet ashes, concrete or brick bins are often used. They should be ventilated to prevent gas explosions. The discharge is from the bottom to wagons or railroad cars.

Handling of Fuel Oil

THE use of fuel oil requires special provisions for storage. While a gravity system of boiler feed is sometimes permissible in small plants or in places where large outdoor areas are available for the location of distant tanks, the usual practice is to place properly vented cylindrical steel tanks under ground or at least below the level of the furnace.

The arrangement adopted is governed in most instances by local and insurance regulations.

The use of a continuous circulating system, that is, with the surplus oil returned to the tank by means of a release valve or by the use of a standpipe, prevents choking, and is especially important with highly viscous oils. The pumps, which are preferably installed in duplicate to protect against interruption of service, can be either rotary or reciprocating, although the former insures a more even pressure.

Live or exhaust steam heaters are ordinarily used in the pressure line, with additional coils in the storage tank if very heavy oils are used.

Some satisfactory systems for handling fuel oil are the *Rogers-Higgins, Staples and Pfeifer, Koerting, Coen and Moore.* Fig. 267, illustrating a *Rogers-Higgins Oil System,* shows the general principles involved. One of two duplex oil pumps, mounted on an exhaust steam heater, serves to draw the fuel from the storage tank and to force it through the heater and strainer to the burners in front of the furnace, where it is atomized by steam. The relief valve above the heater carries back the excess oil to the tank by a separate line.

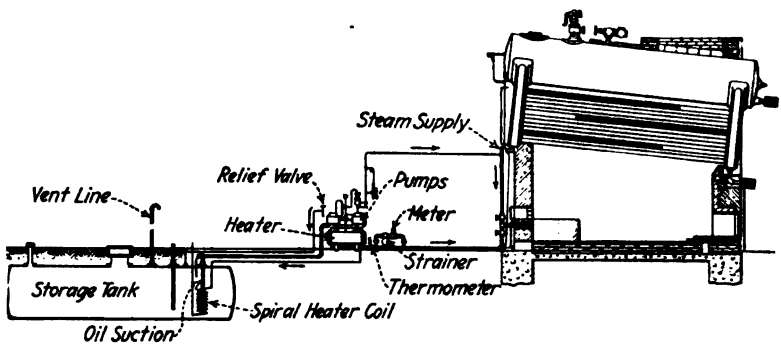

Fig. 267. Diagram of Typical Oil Handling Installation.

A detailed illustration of the oil pump and heater is shown in Fig. 51, on page 125.

Cleaning Boilers

THE successful and efficient operation of a boiler demands that the heating surface be clean both externally and internally. External cleaning of the Heine boiler by means of an efficient mechanical soot blowing system has been discussed in Chapter 1 on HEINE PRACTICE. In water tube

boilers, the waterlegs of which are not equipped with hollow staybolts, or in vertically baffled boilers, the external heating surface is cleaned with a hand lance, or the "rotating element" type of mechanical soot blower.

If boilers are to be stored out in the weather for even short periods, the exterior surfaces should be protected with a good grade of red lead or black paint.

To remove the grease and oil which remain from the operation of manufacture, new boilers should be boiled out twice over, with a charge of 2 to 5 lb. of soda ash each time.

The effect of scale on heat transmission has been discussed in Chapter 14 on FEED WATER. It is obvious that the preferable way to keep internal heating surfaces clean is to avoid scale formation by proper treatment of the water before it is fed to the boiler. However, all boiler plants are not equipped with water treating systems; and often, under bad water conditions, it is not possible to purge the water of scale-forming materials entirely even with chemical treatment. Hence all boilers are subject in a greater or lesser degree to scale formation.

When scale has once formed on the heating surface, it is usual to remove it by washing out or by turbining. If chemical compounds are used, care must be taken to see that the resulting mud or sludge is blown off, as otherwise there is a tendency for it to lodge again on the heating surface and cause bagged or blistered tubes.

Where the scale is of a very soft nature, or where mud deposits on the tubes without baking, the heating surface may be effectively cleaned by washing out with water. But where the scale is hard, turbining is necessary.

There are several types of turbine tube cleaners on the market, the most satisfactory of which is the water turbine. This, as Fig. 268, usually consists of a cylindrical casing containing a small hydraulic turbine, with the necessary guide plate and turbine wheel. On an extension of the turbine

Fig. 268. Roto Tube Cleaner.

shaft arms are mounted to which cutters are attached. These arms revolve at high speed and the cutters bearing upon the scale, chip it off the tube in small pieces. The stream of water flowing from the turbine envelopes the cutters, keeps their edges cool, and washes away the scale as it is loosened.

It is not advisable to operate turbine tube cleaners by steam, because the hot steam exhausting through the tube heats it and causes it to expand to a greater length than its cool companions, and this tends to loosen the tube expansion in the waterleg, resulting in leaks.

Hammer type mechanical tube cleaners, in which the scale is loosened by a series of rapid hammer blows, are applicable to either water tube or fire tube boilers, but are more generally used for the latter. Care must be taken that they are not kept at work in one spot for any length of time, as this tends to weaken the tubes by peening bags on them.

Both hammer and turbine types may be operated by water, steam or compressed air.

United States Custom House and Post Office, Cincinnati, Ohio, equipped with Heine Standard Boilers. Custom Houses at New York City, Baltimore, Pittsburgh, Indianapolis, Cleveland, San Francisco and Kansas City, Mo., are also equipped with Heine Standard Boilers.

Renewing Tubes

OLD tubes can be removed readily by collapsing the ends of the tube with a cold chisel and hammer; but care must be taken not to injure the seat in the tube hole.

When the new tube is in position for expanding, the ends should not project through the tube sheet more than $^{7}/_{16}$ nor less than $^{5}/_{16}$ inch. There are two types of tube expanders in use, known as the *Prosser* and the *Dudgeon.*

The *Prosser* type, which finds favor in locomotive practice, consists of a number of steel segments held together by a rubber or spring steel ring. These segments are of such a size that when the expander is collapsed, it is of smaller size than the bore of the tube, so that it may be inserted easily. The segments surround a tapered steel mandrel, by driving which the segments are separated and bear against the tube. By gradually driving in the mandrel, slacking and turning the tool and driving again, the tube is expanded into its seat in the tube sheet.

The *Dudgeon* expander, which is widely used in stationary water tube practice, expands the tube by the continuous pressure of steel rollers turning inside the tube. This type of expander, Fig. 269, consists of a hollow cylinder, with three or more slots in which are steel rollers. A tapered steel mandrel is inserted through a central hole in the cylinder and bears upon the rolls. By revolving the expander and driving the mandrel, the rolls are forced outward as they rotate, thus expanding the tube. This expander can be either hand or power operated.

Fig. 269. Henderer-Ferguson Self-Feed Roller Tube Expander.

After expanding the tube into its seat in the tube sheet, the tube is slightly flared. Flaring can be done with a so-called "belling" tool or by using the Dudgeon expander with one steeply tapered roll substituted for a straight roll.

The tubes in water-tube boilers are seldom beaded. When desired this may be done with a beading tool or "boot."

Care of Idle Boilers

IF a boiler is to be out of service for three or four months it should be cleaned thoroughly both internally and externally, by washing out, turbining and soot blowing. It should then be filled up with water, to which 100 or 150 lbs. of soda ash have been added. A slow fire should then be maintained until all air has been expelled from the boiler, after which the boiler should be pumped full and closed up tightly. If the stack is located directly above the boiler, the stack top should be covered, or the boiler surface so protected that rain cannot reach it.

If the boiler is to be idle for longer than three or four months, it should be emptied, turbined, washed out, left open to dry, and brushed with a scraper or stiff wire brush. A tray of quicklime should then be placed inside the drum and the boiler closed up tightly.

Some engineers, before emptying a boiler that is to be laid up, place several gallons of crude oil in the shell, so that when the blow-off or drain is opened and the water let out, the oil will form a protecting film on the internal heating surface. If this method is used, the boiler must be thoroughly boiled out with soda ash before again being placed in service, so that all traces of oil may be removed.

"Cutting-In" Boilers

TO "cut-in" a boiler or to put it "on the line" after it has been out of service, is to place it in free communication with other boilers that are under steam.

In cutting in a boiler that has been idle, the stop-valve should be kept closed until the steam pressure in the boiler has risen to the exact value that is prevailing at the time in the steam main to which the boiler is to be connected. It is not sufficient to bring the pressure to within a few pounds of that in the main. Practice of this kind should not be tolerated, for it is exceedingly important that the equality should be as exact as the engineer can make it by the aid of his pressure gages. Then, when the equality is apparently exact, the main stop-valve should be opened very slowly and carefully. It should be opened by a mere crack at first, because it will be impossible by means of commercial steam-gages to judge the equality of the pressure so closely that there will be no flow of steam in either direction. The object of opening the valve slowly is to permit the small outstanding difference of pressure to become equalized very gradually. If there is any evidence of disturbance in the boiler or the piping, as indicated by snapping or pounding, or by abnormal vibration of the boiler, the stop-valve should be immediately closed again.

It is safer to have the pressure in the boiler that is to be cut in, a little higher than that in the steam main, rather than to have it a little lower, because steam will then flow from the boiler out into the main instead of in the opposite direction. Having the pressure in the boiler exceed that in the main, however, is not recommended. It is far better to have the two exactly equal.

Boiler Inspection

THERE are many engineers who believe that boiler inspection is solely the concern of the state or insurance boiler inspector. This attitude is not even justified from the consideration of safety only; and it is certainly not justified when successful and efficient operation is considered. The engineer should not only go over the boiler with the inspector at the time of his rather infrequent visits, but should also make it a point to inspect the boiler at intervals of a month or two. The inspection of the Heine water tube boiler will be discussed here, although the methods of procedure in the case of other types will be somewhat the same.

Before making the actual inspection, the engineer will find it to his advantage to have a blue print of the boiler and setting so that he may check any unusual condition by reference to the print. He will find it necessary to have with him a six-foot rule, a pair of calipers, a stick of chalk, and a pencil and note book. An electric light in a guard on an extension cord is a desirable part of his equipment, though in lieu of this, a pocket flashlight, kerosene torch or candle may be used to furnish light. A mason's hammer is a desirable tool to carry, as it can be used for tapping tubes, rivets, etc., and also for chipping scale from the heating surface, clinker from the outside of the tubes, etc.

Inspection of the boiler must be both external and internal. External inspection covers the outside of the setting, the inside of the furnace, and the exterior of the tubes, waterlegs and shells, while interior inspection refers to the examination of the interior side of the boiler heating surface.

In general, it is most convenient to make the external examination first, for during this part of the work a helper may be knocking in man hole covers, removing hand hole plates and making ready for internal inspection.

External Inspection. When examining the exterior of the setting, the condition of the brick work should be noted. Cracks and loose bricks should be pointed up to prevent air leakage. Inspection doors, fire doors, and ash doors should fit tightly. Buckstays should be close to the brick work or they are not properly supporting the walls, which is their only function.

Entering the furnace, the grates or stoker parts should be examined. Warped or burned grate bars or defective stoker parts should be renewed. That part of the furnace brick work subjected to the highest furnace temperatures should be carefully examined, particularly with reference to erosion or to excessive building up of clinker accumulations. Note whether or not the brickwork protecting the bottoms of the front and rear waterlegs is intact, as these parts should not be exposed to the direct action of flame. Scrape the soot and clinker down from the lower baffle and renew such tile as are faulty. By holding the light between the rows of tubes near each waterleg, look for evidence of leaky tube expansions or leaky staybolts. If any are evident, make note of the location by counting the row up from the bottom and over from one side, and record the same in the note book.

Enter the setting above the tubes, and drop the light down between the rows of tubes near the waterleg and look for evidences of leaky expansions as was done from below. Note also the condition of the soot blower elements, which should extend at least ¼ in. and preferably ½ in. through the waterleg. If any are burned off flush with the waterleg they should be replaced, as the effectiveness of the blast is lessened and erosion of the staybolt is liable to result. Look for any soot accumulations which seem to indicate that the soot blowers are not effective in cleaning certain portions of the heating surface. Examine the upper baffle and make note of any tile replacements needed. Inspect the riveted throat connections and shell joints, looking for incrustations which may be evidence of leaks. Look carefully for external corrosion, such as thinning of tubes, and for commencement of cracks near joints in the sheets. Have the helper work the damper rigging and note the operation of the damper. This completes the external inspection of the boiler.

Internal Inspection. Before making the internal inspection of the boiler BE SURE that:

(1) The main stop valve is tightly closed.
(2) The automatic non-return valve is screwed down.
(3) The blow-off valves are closed.
(4) The feed water valves are closed.
(5) The water tender or firemen know you are in the boiler.

Upon entering the drum, note the thickness or character of the scale deposits, and look for evidences of oil along the water line. Chip away the scale at every seam, note the condition of the rivet heads and look for evidences of corrosion or grooving. Examine the throat stays, and by holding the light down into the waterleg, note the condition of the staybolts. Inspect the dry pipe, deflection plate and mud drum, and see that they are held securely in position. Examine the connections to the water column and see that the pipes are clear.

Examine the staybolts in the waterleg. Tap them with the hammer to see if they are tight. Examine the hand hole cap seats, noting whether any are cut or grooved, or whether gaskets are sticking. Have a helper hold a light at one end of each tube while you examine the tube from the other end. Look for piles of loose scale, which, unless removed, may lodge in the tube and cause a bag or blister. Note character and thickness of scale.

After the boiler and furnace have been inspected, the steam gage should be calibrated and the water column, blow-off piping and valves should be examined. If the safety valves have been repaired or reground, they will have to be reset by a responsible operator after the boiler is fired up.

A report should be made after each inspection and filed for future reference. The report will make possible a comparison of the condition of the boiler at any time with its condition at former inspections; and will also indicate any repairs that are liable to be needed at the next shut-down, so that the material may be ordered and be on hand when wanted, thus preventing unnecessary delay.

Cost of Generating Steam

EVERY power plant is a business in itself, whether it be a large central station or a small isolated plant; and as a business, its records should be kept in such a manner that the cost of producing power is known.

The object of keeping records is not only to allocate charges for determining a fair cost or selling price of the power; but also to enable the plant manager to compare station performance from time to time, and the engineer to analyze the various records with a view of reducing all losses to a minimum.

Different methods of cost accounting are applicable to different types of power plants. A public utility corporation, which not only generates power, but distributes its product over a wide area, will of necessity employ a different cost keeping method than a manufacturing plant which uses its steam for power, lighting, industrial cooking, etc. Many states require that public utility corporations submit annual statements on printed forms provided by the state, and this governs the method of cost accounting to be followed in such instances. But the owner of a private plant is free to use his own method of cost keeping, and the following general methods of accounting the cost of generating steam have been outlined for such cases.

Power plant costs usually include the total cost of power production, with no subdivision of cost into boiler room and engine room expense. For example, the labor item is seldom subdivided so as to cover the various duties it performs; yet the necessity of these operations being performed creates the expense, and unless it is known how much labor is required to perform them, the magnitude and cause of the expense is only approximate. The cost of generating steam is the largest factor in power cost, and hence it is essential for intelligent management that this cost be kept separate from engine room and distribution expenses.

Costs can be divided into three general classes: (1) overhead or fixed charges, (2) operating costs and (3) maintenance costs.

Overhead Charges

Overhead or fixed charges may include:

Interest on Investment	Taxes
Depreciation	Insurance
Rent	Management

Interest on Investment. Expert accountants are not in agreement as to the propriety of including this item. It is contended that interest forms part of profit, and if included in overhead cost it is virtually charged twice over. But in comparing competing equipment, interest on the cost at prevailing rates for borrowing money should be considered, so as to make the comparison a fair one.

Depreciation may be classified as: (1) physical depreciation and (2) functional depreciation or obsolescence.

Physical depreciation is defined as the decrease in value of equipment due to age or wear and tear in service, while functional depreciation means the decrease in value of equipment due to its becoming unsuitable for use or out of date before the end of its estimated life. It is obvious that the rate of physical depreciation can be lessened by increasing the life of apparatus by repairs and proper maintenance.

There is considerable disagreement between engineers and between accountants as to the proper method of computing depreciation charges. Probably the most commonly used is the straight-line method which is based upon the assumption that if the investment, less the salvage value, is divided by the life of the equipment, the resulting quotient expresses the amount which should be allowed each year to cover the accrued depreciation. Frequently the salvage value is not taken into consideration, as being more conservative.

Rental. A proportion of the rent paid for land and buildings should be included in overhead charges, unless these are owned by the concern.

Taxes. The location of the plant governs this item, which may range from 0.1 per cent to 2.5 per cent on the assessed valuation of the equipment.

Insurance may include fire, employers' liability and boiler insurance; the amount being charged to the cost of steam generation, being pro rated to suit the particular plant conditions.

Management Cost is very frequently included in the overhead charges, and as such may include a proportion of the following:

Manager's Time	Office Maintenance
Chief Engineer's Time	Restaurant
Drafting Room	Care of Grounds
Office Help	Miscellaneous

Operating Costs

Boiler room operating costs include both labor and material, which may be enumerated as follows:

Materials	Fuel Water Lubricants Miscellaneous Tools Water Softening Chemicals or Boiler Compounds Rags and Waste Miscellaneous
Labor	Coal Unloading and Handling Feeding Stokers or Furnaces Tending Water Cleaning Fire Side of Boilers Cleaning Water Side of Boilers Cleaning Economizer Cleaning Feed Water Heaters Cleaning Boiler Room Ash Handling and Disposal Testing Boilers Miscellaneous

Fuel is the largest single item of expense in boiler room operation, and therefore any saving effected in its use is readily noted on the cost sheet. *Labor* is the next highest cost of operation. By keeping careful record of the distribution of labor in the boiler room, operating costs in this regard can be kept down to the minimum necessary for the efficient handling of the equipment. Any undue labor cost in the items enumerated above will also serve to indicate the advisability of installing more efficient apparatus or labor saving machinery.

Maintenance Costs

Boiler room maintenance costs also include both labor and material. In some respects the line drawn between maintenance costs and operating costs is a fine one; though, in general, maintenance is understood to refer to the labor and material cost on repairs to:

Buildings	Superheaters
Stacks and Breechings	Feed Water Heaters
Coal Handling Machinery	Water Softeners
Ash Handling Machinery	Pumps and Injectors
Stokers and Furnaces	Piping, Valves, Traps, Pipe Covering
Fans and Ducts	Tools
Motors and Stoker Engines	Instruments
Boilers and Settings	Miscellaneous
Economizers	

Maintenance costs tend to increase with the age of equipment. While operating costs are lowered by the installation of labor saving machinery, maintenance costs are slightly increased.

Four 315 H. P. Heine Standard Boilers set over Jones Underfeed Stokers in the Hamilton County Court House, Cincinnati, Ohio.

INDEX

C

D

Q

R

T

Y

Z

GEO. H. GIBSON CO.
TOWNSEND BUILDING NEW YORK

PRESS OF
KUTTERER-JANSEN PRINTING CO.
ST. LOUIS

This book may be kept

FOURTEEN DAYS

from last date stamped below. A fine of TWO CENTS will be charged for each day the book is kept over time.

24Mr'49			
1Je'49			
12 De'50			
15 Ja 51			
25Mr'52			
8Ap'52			
MAY 16 '56			
DE 11 '65			